Handbook of

Steel Drainage & Highway Construction

PRODUCTS

Canadian Edition

CORRUGATED STEEL PIPE INSTITUTE

Handbook of Steel Drainage & Highway Construction PRODUCTS

Published by:
Corrugated Steel Pipe Institute
652 Bishop Street North, Unit 2A
Cambridge, Ontario, Canada N3H 4V6

American Iron and Steel Institute
1101 17th Street, N.W., Suite 1300
Washington, DC, USA 20036-4700

Copyright © 1984
American Iron and Steel Institute

All rights reserved, including the right of
translation and publication in foreign countries.

First Canadian Edition
First Printing - April 1984
Second Printing - March 1991
Third Printing - May 1995

Second Canadian Edition
First Printing - June 2002
Second Printing - November 2007

The material presented in this book has been prepared for the general information of the reader. It should not be used without first securing competent professional advice with respect to its suitability for any given application. While the material is believed to be technically correct, neither the American Iron and Steel Institute nor the Corrugated Steel Pipe Institute nor the companies represented by these associations warrant its suitability for any general or particular use.

cspi

American Iron
and Steel Institute

PREFACE

This is the Second Canadian Edition of the "Handbook of Steel Drainage and Highway Construction Products". It has been developed and published by the Corrugated Steel Pipe Institute, representing the CSP industry in Canada. The First Canadian Edition of this book was written and published by the American Iron and Steel Institute in 1984. Since then there have been a number of reprints, but no major changes. This second edition is the result of a thorough review, revision and updating of information to reflect the current state-of-the-art and needs of the users in Canada.

Some of the specific changes that have been made include:

- The addition of spiral rib CSP and deep corrugated structural plate profiles.
- Structural design in accordance with the 2001 Canadian Highway Bridge Design Code CSA-S6 for structures 3 m in span and larger.
- Design examples illustrating the structural design methodology.
- Additional retaining wall types.
- All metric information.

Major credit for preparing this second edition goes to the CSPI Technical Advisory Committee:

K. Derayeh (Dofasco)
S. Finlay (Armtec)
S. Fox (Canadian Sheet Steel Building Institute)
S. MacKinnon (Atlantic Industries Ltd.)
B. Matheson (F.S.I. Culvert Inc.)
G. Millar (Stelco)

Additional input was received from R. Brockenbrough (R.L. Brockenbrough & Associates) and T. McCavour (McCavour Engineering)

Users of this *Handbook of Steel Drainage and Highway Construction Products* are encouraged to offer suggestions for improvement in future editions.

cspi

Corrugated Steel Pipe Institute
2007

TABLE OF CONTENTS

CHAPTER 1 • APPLICATIONS
INTRODUCTION 1
Progress Through Research 1
Sizes and Shapes 1
Structural Strength 1
Low Maintenance 1
Time Saving 1
Acceptance of Steel 2
STORM DRAINAGE 2
Culverts 2
Storm Sewers and Stream Enclosures 3
Bridges and Bridge Replacements 3
LONG SPAN STRUCTURES 4
CORRUGATED STEEL BOX CULVERTS 5
NOTABLE INSTALLATIONS AND OTHER TYPES OF SEWERS 6
STORM WATER MANAGEMENT 6
Retention Systems 7
Detention Systems 8
SUBDRAINAGE 8
SPECIAL WATER RELATED ISSUES 9
Erosion Prevention 9
Dams and Levees 9
Drainage Gates 9
Fish Baffles 9
Power Plant Cooling Water Lines 11
Sheet Flow Drainage 11
MISCELLANEOUS APPLICATIONS 11
Underpasses for Pedestrians and Animals 11
Vehicular Underpasses 12
Material Handling Conveyors, Tunnels and Granaries 12
Utility Conduits 12
Bent Protection Systems 13
AERIAL CONDUITS 13
Introduction 13
Sewers and Water Lines 13
Service Tunnels 13
Ventilation Ducts 14
Fan Ducts 15
Heat Manifolds and Stacks 15
BIBLIOGRAPHY 16

CHAPTER 2 • PRODUCT DETAILS & FABRICATION
INTRODUCTION 17
Design Factors 17
Background of Corrugated Steel Conduits 18
Shapes 18
SECTION A: CORRUGATED STEEL PIPES 18
Description of Corrugations 18
Section Properties 21

Sizes and Shapes 21
Perforated Pipe.....31
Conveyor Covers 32
Nestable Corrugated Steel Pipe 33
Ditch Liner 34
Concrete Lined CSP.....34
CSP Slotted Drain Inlets.....34
SECTION B: STRUCTURAL PLATE AND DEEP
CORRUGATED STRUCTURAL PLATE PRODUCTS 36
1. STRUCTURAL PLATE 36
Product Description 36
Section Properties.....36
Sizes and Shapes 36
Bolts and Nuts 51
Arch Channels.....52
2. DEEP CORRUGATED STRUCTURAL PLATE 52
DEEP CORRUGATED STRUCTURAL PLATE TYPE I.....52
Product Description 52
Section Properties.....53
Sizes and Shapes.....53
Corrugated Steel Box Culverts 59
DEEP CORRUGATED STRUCTURAL PLATE TYPE II 63
Product Description 63
Section Properties.....64
Sizes and Shapes 64
SECTION C: SPECIFICATIONS 68
Specifications in Common Use.....68
Material Specifications - Historical Background 68
SECTION D: CSP COUPLING SYSTEMS 70
Gain in Length.....74
Leakage.....74
Special Joints.....74
SECTION E: FITTINGS 75
Saddle Branch 78
Manholes and Catch Basins.....80
SECTION F: END FINISHES 83
Purpose 83
Types of Finish.....83
BIBLIOGRAPHY 93

CHAPTER 3 • HYDROLOGY
INTRODUCTION.....95
ESTIMATION OF RAINFALL.....96
Rainfall Intensity-Duration-Frequency Curves.....96
Rainfall Hyetographs 97
Synthetic Rainfall Hyetographs 99
Uniform Rainfall 100
The Chicago Hyetograph 101
The Huff Rainfall Distribution Curves 103
SCS Storm Distributions.....104

ESTIMATION OF EFFECTIVE RAINFALL 105
The Rational Method 106
SCS Method 108
The Horton Method.....111
Comparison of the SCS and Horton Methods 113
ESTABLISHING THE TIME OF CONCENTRATION 114
Factors Affecting Time of Concentration 116
The Kirpich Formula 116
The Uplands Method 117
The Kinematic Wave Method 119
Other Methods 119
DETERMINATION OF THE RUNOFF HYDROGRAPH.....119
SCS Unit Hydrograph Method 120
Rectangular Unit Hydrograph Method 122
Linear Reservoir Method.....123
SWMM Runoff Algorithm 124
COMPUTER MODELS 126
BIBLIOGRAPHY 128

CHAPTER 4 • HYDRAULICS
INTRODUCTION 129
HYDRAULICS OF OPEN DRAINAGE CHANNELS 129
General.....129
Chezy Equation 130
Manning's Equation.....130
The Use of Charts and Tables 132
Safe Velocities 135
Channel Protection 135
HYDRAULICS OF CULVERTS.....137
Introduction 137
What Makes a Good Culvert? 137
Design Method 139
Flow Conditions and Definitions 139
Hydraulics of Culverts in Inlet Control.....140
Hydraulics of Culverts in Outlet Control.....143
Research on Values of n for Helically Corrugated Steel Pipe..147
Field Studies on Structural Plate Pipe 147
HYDRAULIC COMPUTATIONS 148
Inlet Control.....148
Outlet Control.....148
Improved Inlets 150
Hydraulic Nomographs.....150
Hydraulic Programs.....150
HYDRAULICS OF LONG SPAN STRUCTURES 171
Introduction 171
Design 171
Design Chart.....171
Design Calculations.....173
SPECIAL HYDRAULIC CONSIDERATIONS 180
Uplifting Forces 180

Piping 180
Weep Holes 180
Anti-Seepage Collars 180
Single vs. Multiple Openings 180
HYDRAULICS OF SUBDRAINS 182
Free Water 182
Subsurface Runoff Computation 182
Size of Pipe 183
Geotextiles 184
HYDRAULICS OF STORM WATER INLETS 184
BIBLIOGRAPHY 192

CHAPTER 5 • CULVERT LOCATION
PRINCIPLES OF CULVERT LOCATION 193
Alignment 193
Grade 196
Culvert Length 197
Pipe Length for Skew Angles 199
BIBLIOGRAPHY 201

CHAPTER 6 • STRUCTURAL DESIGN
INTRODUCTION 203
RESEARCH AND DEVELOPMENT OF BURIED STRUCTURES 204
MATERIALS 206
Steel and Corrugation Properties 206
Soil Properties 208
Material Unit Weights 209
DESIGN OF BURIED STRUCTURES WITH SPANS UP TO 3 m 209
Minimum Clear Spacing Between Structures 210
Loads 210
Design Process 213
DESIGN OF BURIED STRUCTURES WITH
SPANS GREATER THAN 3 m 225
AISI Method 225
AASHTO Method 226
CHBDC Method 226
Design Process: Soil Metal Structures 229
Design Process: Metal Box Structures 243
HEIGHT OF COVER TABLES 249
DESIGN EXAMPLES 259
DESIGN OF FITTINGS REINFORCEMENT 291
COLUMN OR END LOADS 293
EXTERNAL HYDROSTATIC PRESSURE 294
AERIAL SPANS 295
END TREATMENT 296
Temporary Bracing 301
Standard Designs 301
APPENDIX A • Utah Test Program 1967 - 1970 301
BIBLIOGRAPHY 307

CHAPTER 7 • INSTALLATION AND CONSTRUCTION PROCEDURES
INTRODUCTION 309
BASE PREPARATION.....309
Soft Foundation 310
Rock Foundations 312
NORMAL BEDDING 312
Camber 314
INSTALLATION OF CORRUGATED STEEL PIPE AND PIPE-ARCH.....314
Unloading and Handling 314
Assembly 315
Coated Pipe.....317
Paved Invert Pipe 317
INSTALLATION OF STRUCTURAL PLATE (SPCSP) AND DEEP CORRUGATED STRUCTURAL PLATE STRUCTURES 317
Unloading and Handling 317
Assembly Methods 319
Special Considerations For Structural Plate Arches.....323
Special Considerations For Structural Plate Pipe-Arches 323
Asphalt Coating - Shop or Field 324
Seam Sealants.....324
Sub-Drainage 324
PLACEMENT AND COMPACTION OF BACKFILL 325
Selection of Structural Backfill.....325
Soil Design for CSP 325
Soil Design for Soil-Steel Structures.....325
Compaction Density 326
Compaction Equipment.....326
Placing Backfill Around Structure.....327
Steps in Backfill Operation.....328
Shape Control 332
Vertical Deflection 333
Minimum Cover 333
Construction Loads 334
Special Considerations for Pipe-Arches 334
Special Considerations for Arches 334
Cohesive Backfill 334
Hydraulic Backfill.....335
Submerged Bedding 335
Backfill Summary 336
PROTECTION OF STRUCTURE DURING CONSTRUCTION.....336
MULTIPLE STRUCTURE INSTALLATION 336
CONSTRUCTION SUPERVISION AND CONTROL.....337
END TREATMENT.....339
LINING TO EXTEND LIFE 340
Need for Lining 340
Pressure Grouting.....340
Other Shapes of Structures 340
BACKFILL OF LONG SPAN STRUCTURES 341
Foundation.....341
Bedding.....341
Backfill 341

BOX CULVERTS 343
STORM WATER DETENTION AND RETENTION STRUCTURES 343
SUMMARY 343
BIBLIOGRAPHY 344

CHAPTER 8 • DURABILITY
INTRODUCTION 345
FACTORS AFFECTING CSP DURABILITY 345
Durability in Soil 345
Durability in Water 347
Resistance to Abrasion 347
FIELD STUDIES OF DURABILITY 347
State Studies 347
AISI Study 348
NCSPA/AISI Study 348
Canadian Studies 348
DESIGN LIFE 349
DURABILITY GUIDELINES 349
CSP With Only Metallic Coating 349
CSP With Protective Coatings and Pavings 349
Example of Durability Design 351
COATINGS FOR CSP 351
Metallic Coatings 351
Nonmetallic Coatings 352
Supplier Information 353
BIBLIOGRAPHY 354

CHAPTER 9 • VALUE ENGINEERING AND LEAST COST ANALYSIS
INTRODUCTION 357
VALUE ENGINEERING 357
INCLUSIONS OF ALTERNATIVE MATERIALS
IN A PROJECT INDUCES LOWER PRICES 358
Alternate Designs and Bids on Pipe 359
COST SAVINGS IN ALTERNATE DESIGNS 360
LEAST COST ANALYSIS 361
Design Life 361
Residual Values 362
Material Service Life 363
Recurring Annual Costs 363
Rehabilitation vs. Replacement 363
Discount Rates and Inflation 364
Recommendations 366
Calculations 367
Sensitivity of Results 368
SUMMARY 368
BIBLIOGRAPHY 369

CHAPTER 10 • INSPECTION, MAINTENANCE AND REHABILITATION
INSPECTION 371
Environmental Assessment 371
Structural Assessment 371

Shape Monitoring 371
Crimping of the Conduit Wall.....373
Bolt-hole Cracks 373
Bearing Failure at Longitudinal Seams.....374
Excessive Deformation.....375
Lifting of the Invert.....376
Lifting of the Pipe Ends 376
Distortion of Bevelled Ends 376
MAINTENANCE 376
Vacuum Pumps 376
Waterjet Spray.....376
Bucket Line.....377
Fire Hose Flushing.....377
Sewer Jet Flushers 377
REHABILITATION 377
Methods of Rehabilitation.....378
BIBLIOGRAPHY 386

CHAPTER 11 • TUNNEL LINER PLATE
INTRODUCTION 387
GENERAL APPLICATIONS.....387
DESIGN.....388
PRODUCT DETAILS.....395
INSTALLATION NOTES 397
CAISSON DESIGN.....398
BIBLIOGRAPHY 400

CHAPTER 12 • GUIDERAILS
INTRODUCTION 401
DESIGN PURPOSE 401
RESEARCH AND TECHNOLOGY.....402
DESCRIPTION OF SEMI-RIGID GUIDERAIL SYSTEMS 404
W-Beam or Thrie Beam 404
Box Beam 407
INSTALLATION PRACTICE 407
INSTALLATION OF GUIDERAIL OVER LOW COVER SOIL-STEEL STRUCTURES 409
BRIDGE RAILING 410
BIBLIOGRAPHY 410

CHAPTER 13 • RETAINING WALLS
GENERAL.....411
TYPES OF WALLS 411
Bin Type Walls.....411
DESIGN CONSIDERATIONS 413
Design Depths and Heights.....416
Changes in Elevation.....416
Curved Walls 416
Special Treatment 416
INSTALLATION CONSIDERATIONS 417

WELDED WIRE WALLS 417
Welded Wire Wall Specifications.....417
Welded Wire Wall Design Considerations 420
Special Treatment 420
Welded Wire Wall Construction 420
GABIONS 422
Materials 422
Gabion Sizes.....423
Applications 423
Design 424
Installation 425
BIBLIOGRAPHY 428

CHAPTER 14 • SHEET STEEL PILING
INTRODUCTION 429
DRIVING.....429
SHORE PROTECTION 430
PROTECTIVE COATINGS.....430

DEFINITION OF TERMS 433

SYMBOLS.....459

INDEX.....466

CHAPTER 1

APPLICATIONS

INTRODUCTION

Years of dependable service and a multitude of wide ranging installations have led the corrugated steel industry to play a major role in modern engineering technology for drainage systems. Flexible steel conduits play an important role in the form of culverts, storm sewers, subdrains, spillways, underpasses, conveyor conduits, service tunnels, detention chambers and recharge systems; for highways, railways, airports, municipalities, recreation areas, industrial parks, flood and conservation projects, water pollution abatement and many other programs.

Progress Through Research

Engineers and contractors are an imaginative lot, seeking improved ways of designing and building their projects. Steel manufacturers and fabricators have cooperated, through their research and manufacturing staffs, to provide engineers and contractors with better materials, products and installation methods.

Manufacturers' sales staffs and associations are made up largely of experienced professional engineers, knowledgeable in the construction industries problems, who constitute a prime information source on applications, specifications and installation of their products.

Sizes and Shapes

Corrugated steel products are available in a wide range of sizes and shapes for many applications. Round pipe is available in diameters from 150 mm to nearly 16 m. Pipe-arches, long span structures, arches and box culverts are available in many combinations of rise and span up to 23 m.

Structural Strength

Mechanical properties of steel are controlled in the mill, and the finished product is fabricated to exacting specifications. The strength and integrity of soil/steel structures is extremely predictable as the result of current research in laboratory and field installations.

Low Maintenance

Costs of maintaining installations are effectively controlled through modern design criteria for corrosion factors. By proper use of materials for specific locations or applications, utmost economy and optimum service life are assured.

Time Saving

With the huge investment in equipment and the high cost of labor, contractors are always looking for materials and products to help avoid costly delays and speed installation. Strategically located corrugated steel pipe fabricating plants ensure timely deliveries. Temperature extremes and precipitation have little effect on corrugated steel structures, so they can be scheduled for delivery and installation with a minimum of delay. Rapid installation and the inherent strength of steel enable the contractor to make more efficient use of equipment. Heavy earthmovers can operate over corrugated steel structures with adequate cover, a very real savings often overlooked when evaluating corrugated steel against other materials.

Acceptance of Steel

Steel is universally recognized, specified and used as a construction material for corrugated conduits and other products. For many years, these products have been included in standards and specifications published by the Canadian Standards Association (CSA), the American Association of State Highway and Transportation Officials (AASHTO), the American Society for Testing and Materials (ASTM), the Federal Highway Administration (FHWA), the American Railway Engineering and Maintenance-of-Way Association (AREMA), the Corps of Engineers, the Federal Aviation Administration (FAA), the U.S. Forest Service, the Natural Resources Conservation Service (NRCS), as well as provincial, county, township and municipal departments, and well recognized consulting engineers.

STORM DRAINAGE

Generally, drainage facilities can be classified into three major types of construction; culverts, storm sewers and bridges.

Culverts

The distinction between culverts and storm sewers is made mostly on the basis of length and the types of inlets and outlets. A culvert is defined as an enclosed channel serving as a continuation or substitute for an open stream, where that stream meets an artificial barrier such as a roadway, embankment, or levee. Culverts are usually less than 60 m in length.

A culvert may also be classified as a type of bridge. Normally, the rigid definition of a bridge requires that the deck of the structure also be the roadway surface, and simply an extension of the roadway. The use of corrugated steel pipe, large diameter pipe-arches, structural plate, and corrugated steel box culverts have played a major role as replacements for deteriorated bridges and altered this conventional definition.

Highway 401 in Ontario using spiral rib steel pipe and corrugated steel pipe for median drainage.

Storm Sewers and Stream Enclosures

A storm sewer is a collection system for storm water, surface water and street wash, exclusive of domestic and industrial wastes. It is a series of tangent sections with manholes or inlets at all junction points. This water is little, if any, more corrosive than rural watershed runoff. Erosion by the hydraulic traffic may be a factor but normally is less than in culverts.

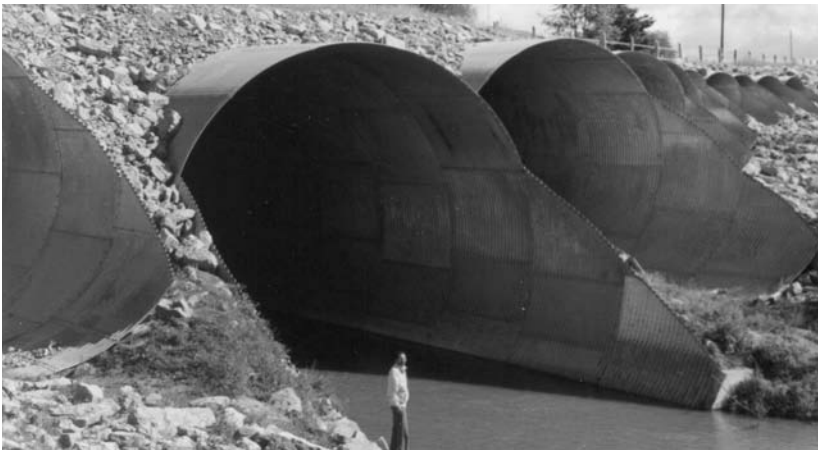

Combination stream crossing (with relief from flow area) and voids to reduce dead load on foundation soils.

Corrugated steel storm sewers have a service record of over 100 years. The strength, flexibility, positive joints and installation economies of steel storm sewers are assured by the use of rational corrosion design criteria and readily available coatings and linings. Steel storm sewers are also used to re-line failing sewers of all sizes, shapes and materials with a minimum reduction in waterway area.

Many growing communities face the need for expansion in their storm sewer systems to accommodate residential, commercial and industrial developments. Corrugated steel pipe provides a ready solution. Its inherent advantage to contractors, and long range economies for cost-conscious municipalities, enables construction of projects that might not be built otherwise. Open materials competition ensures these communities of the most favorable bid prices possible.

The use of corrugated steel pipe for storm sewers has grown. The product data, design information and engineering considerations for such applications are beyond the scope of this publication. The Corrugated Steel Pipe Institute (CSPI) has published a design handbook entitled Modern Sewer Design, which covers proper storm sewer design.

Bridges and Bridge Replacements

It is estimated that more than 1/3 of the over 600,000 bridges in North America are in urgent need of repair. This situation is especially acute at county or municipal levels because funds for maintenance and replacement of secondary roadway bridges are limited. The majority of bridges on the secondary system are termed short span, less than 15 m in length, and can be replaced or rebuilt with corrugated steel structures; conventional corrugated steel pipe and pipe-arches, structural plate pipe, pipe-arches, arches, steel box culverts, or long span culverts.

Long span structure under construction for grade separation.

LONG SPAN STRUCTURES

In the late 1960's, developments were made which involved adding longitudinal and circumferential stiffening members to the conventional 152 x 51 mm corrugation structural plate structures which permitted the use of larger sizes and increased permissible live and dead loads.

This concept made it possible to achieve clear spans up to 18 m and clear areas up to approximately 100 m^2. With the introduction in Canada of 381 x 140 mm deep corrugated structural plate in the 1990's, clear spans increased to 23 m with clear areas of 157 m^2. A 400 x 150 mm deep corrugated structural plate product is also available. Long span structures are particularly suited for relatively low, wide-opening requirements. Depth of cover generally ranges from 0.3 to 30 m.

Design procedures covering these long span structures can be found in the Canadian Highway Bridge Design Code (CHBDC) and the latest editions of the AASHTO Standard Specifications for Highway Bridges, Section 12.7, and LRFD Bridge Design Specifications, Section 12.8. These standards provide for the selection of acceptable combinations of plate thickness, minimum cover requirements, plate radius and other design factors.

Backfilling adjacent to long-span structure with structural plate ribs.

Some of the applications in which these structures are serving include bridges, highway and railroad overpasses, stream enclosures, tunnels, culverts and conveyor conduits. The structures have been extremely popular for bridge replacement, and when used as such provide the following advantages:

1. Eliminates icy bridge deck problems.
2. No bridge deck deterioration problems.
3. Eliminates constant maintenance of bridge approaches and painting of the superstructure.
4. Permits the use of a constant roadway section in the vicinity of the structure.
5. The roadway is easily widened by simply extending the ends.
6. They are readily available and can be field assembled with unskilled labor.
7. Less design and construction time is required, allowing earlier project completion.
8. Environmentally preferred since they permit the natural appearance of earth slope and vegetation to be utilized.
9. Economical.

For available shape configurations, sizes and waterway areas, consult Chapter Two, Product Details and Fabrication. If an appropriate structure to meet project requirements is not shown, a design to meet specific site conditions can be provided by the manufacturers.

CORRUGATED STEEL BOX CULVERTS

Many roads were built along the path of least resistance for early travelers, and this meant easy access for fording streams. As roadways and modes of transportation improved, bridges were built to avoid fording streams. In these locations there is little elevation differential between the desired roadway and the streambed. The shape of the box culvert, with its essentially flat top and vertical sides, is especially well suited for these types of installations where high quantity flows may be encountered, but minimal space is available for deep flows and high backfill covers over the culvert.

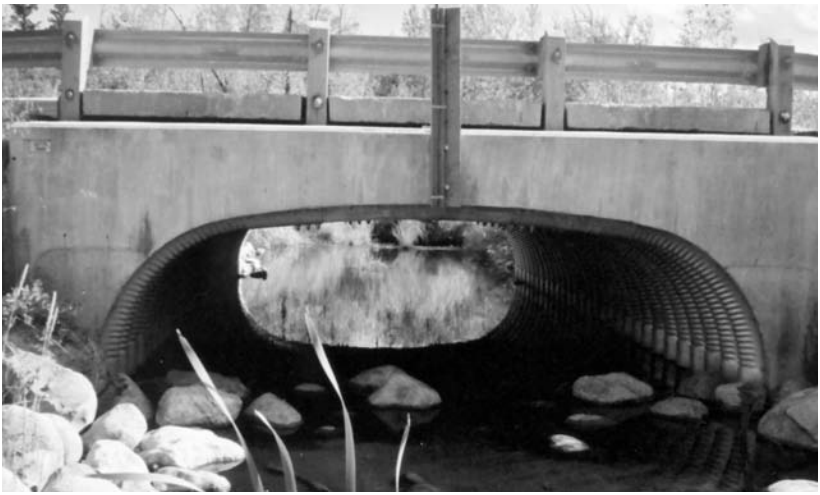

Corrugated box culvert bridge.

Box culverts are manufactured from standard 152 x 51 mm corrugated structural plate and 381 x 140 mm deep corrugated structural plate. They can be reinforced with either continuous corrugated plate or intermittent circumferential ribs using corrugated plate or structural shapes.

Standard corrugated box culverts are available in spans up to 8 m with end areas up to 20 m^2, while deep corrugated box culverts can span up to 12.3 m with end areas up to 36 m^2.

NOTABLE INSTALLATIONS AND OTHER TYPES OF SEWERS

Although the principal use of corrugated steel pipe (CSP) is for storm drainage, there are some classes of domestic, commercial and industrial effluent which may be handled economically by corrugated steel pipe sewers. The corrosiveness of the effluent is a prime consideration. However, pretreatment of effluents, and a specific required service life may also be pertinent factors. With adequate special coatings, linings and couplings, corrugated steel pipe has, in many instances, given a notable record of economical and satisfactory service.

The Credit Valley Conservation Authority installed over 533 m of 1525 mm diameter CSP for storm control in the Metcalfe Ravine, in the Town of Georgetown, Ontario. Six alternate pipe designs, with full cost estimation and evaluation, were submitted by the consulting engineer. The lowest cost, and recommended alternative, was a design in corrugated steel pipe. The steel estimate was 68% less than the most expensive, and $16,000 less than the next lowest alternative.

The city of Grande Prairie, Alberta is typical of many modern, fast-growing young urban areas to be found across Canada, all of which are looking carefully at means to make their tax dollars go further. Well over 10 km of steel storm sewers have been installed by the city since 1977, using all-steel drainage design. Owners, contractors, and engineers have realized significant cost savings, whenever corrugated steel pipe is specified, or allowed as an alternate to other pipe products.

A revolutionary new approach to storm water management shows promise to solve, or at least considerably alleviate, the worldwide problem of urban flood damage during major rainfall events. This innovative engineering solution is usually within the taxpayer's pocketbook. Temporary detention of stormwater in underground storage tanks has been demonstrated as cost-effective in a prototype installation in a section of the then Borough of York, in northwest Metro Toronto. Basement flooding in the area previously occurred on an average of once a year. Since completion of the flood relief works in October 1978, there has been no basement flooding despite some major storms. The new works were designed to provide protection against up to ten year storm events. Preliminary estimates to provide overall storm relief and sewer separation for the Borough, based on a 1968 engineering study plus inflation, would have required expenditures over 25 years in excess of $40 million. From 1968 to 1976 approximately $6 million had been spent for separating storm and combined flows, and the three most extremely susceptible problem areas still required relief construction. The overall cost of the completed relief works for these three areas was approximately $988,000, or roughly one year of the Borough's budget to solve the flooding problem.

STORM WATER MANAGEMENT

The continuing spread of urbanization requires new drainage concepts to provide efficient and safe disposal of storm water runoff. Existing storm drains in most areas

cannot handle the additional volume at peak flow times. Severe flood damage can occur without storm water management utilizing such tools as retention and detention systems.

Retention Systems

Where storm water runoff has no outlet for disposal, a retention system is a viable solution. The storm water is deliberately collected and stored, then allowed to dissipate by infiltration into the ground. Additional benefits are the enhancement of the ground water resources and the filtration of storm water through percolation. The use of fully perforated corrugated steel pipe for recharge wells and linear pipes is a very cost effective way of disposing of excess storm water.

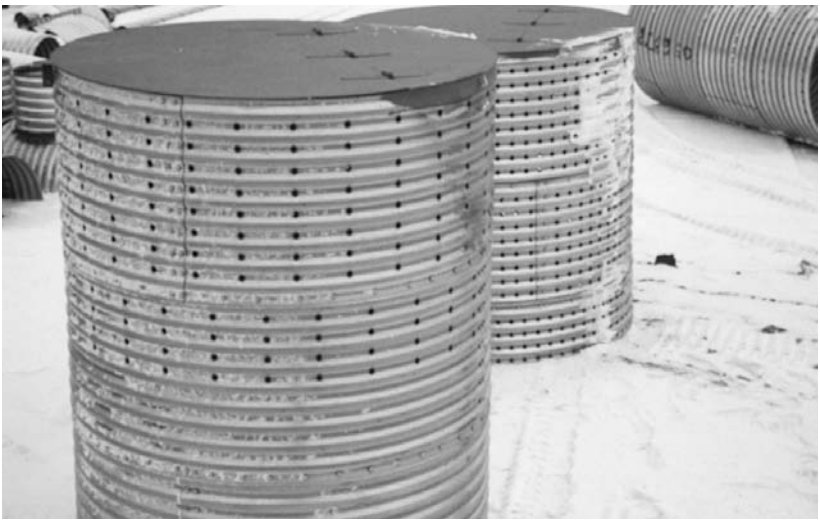

Perforated pipe for storm water management pond discharge treatment and quality control.

Perforated CSP riser surrounded by clear stone for storm water quality treatment and discharge quality control.

Detention Systems

Where storm water runoff has an outlet that is restricted due to downstream use during peak flow periods, a detention system can be used. Temporary detention of storm water in corrugated steel pipe storage tanks can be most economical and reliable.

Storm water is detained beyond the peak flow period and then systematically released into the downstream storm drain. The demand for zero increase in rate of runoff is very apparent in urban drainage design. Using corrugated steel pipe for detention and retention systems answers that need.

For further details of storm water management covering retention/detention and surface disposal, please refer to CSPI publication, "Design of Underground Detention Systems for Stormwater Management".

Stormwater detention system.

Subdrainage

Subdrainage is the control of ground water, in contrast to surface water or storm drainage.

Subdrainage is a practical, economic way of maintaining firm, stable subgrades and structure foundations, eliminating wet cuts and preventing frost heave, preventing sloughing of fill and cut slopes, keeping recreational areas dry, and reducing saturation of backfill behind retaining walls.

The civil engineer considers soil as an engineering construction material for road and building foundations, backfills for retaining walls, embankments, and cut sections for roads, highways and channels. The engineer is concerned about the basic soil characteristics, the presence of ground water, and whether subdrainage is practical for the soils on the project.

With a little study and experience, many soil and ground water problems can be recognized and solved with subdrainage pipe. For the more difficult cases, a soils engineer and soil testing laboratory are indispensable.

SPECIAL WATER RELATED ISSUES

Erosion Prevention

Soil erosion by water is a common and destructive force that plagues many engineering works. It makes unsightly gullies on roadways, cut slopes and embankments. It gouges out side ditches, fills culverts with sediment and is a costly nuisance.

There are three basic ways of preventing erosion. The first is to treat the surface by paving, riprap, erosion-resistant turf, vines, or other vegetation. The second is to reduce the velocity of the water by means of ditch checks. The third is to intercept the water by means of inlets and convey it in corrugated steel flumes, pipe spillways, stream enclosures, or storm drains. Larger streams may be controlled by steel sheeting, jetties, or retaining walls.

Corrugated steel pipe, with its long lengths, positive joints and flexibility to conform to shifting soil, provides a most dependable means of solving erosion problems.

Dams and Levees

Earth dams, levees and many other types of embankments require culverts or outlets for intercepted or impounded water. Corrugated steel pipes are particularly advantageous and have enviable records for this type of service

Small dams are used extensively for soil conservation and to supply drinking water for livestock. Large dams may impound water for public supplies, irrigation, power, recreation, or navigation. All dams require some means, such as a drain pipe spillway, to handle normal overflow and prevent overtopping and possible washout. For emergency overflow, a turf covered ditch, or one lined with a corrugated steel flume, or chute is usually satisfactory.

Soil conditions at these locations are seldom ideal. Hence strong, flexible pipes are needed to resist disjointing, settlement and infiltration of the surrounding soil. A local or regional office of the Natural Resource Conservation Service (formerly Soil Conservation Service) can be helpful in suggesting suitable details based on proved local practice.

Diaphragms should be located at a minimum distance of 1.2 m from a field joint and, if riveted, midway between circumferential seams.

Drainage Gates

Flap and screw-lift operated water control gates are two types of gates frequently used in combination with corrugated steel pipe products to control water. The latter type is used where extra control is required, but they tend to require timely opening and closing.

Both types are available with round or rectangular openings. Flap gates are available in diameters from 100 to 3000 mm. Slide gates can be specified with nominal slide dimensions from 150 x 150 mm to 3000 x 3000 mm and in diameters from 150 to 3000 mm. Radial and roller gates are also available.

Fish Baffles

In many sites, the need to accommodate migrating fish passage is an important consideration in culvert design.

Transportation and drainage designers should seek early coordination with environmental, fish, and wildlife agencies to ensure that stream crossings that require provisions for fish passage are identified before design commences.

Extensive experience has shown clearly that culverts can be designed to provide for fish passage. Design criteria for the specific fish species should be clarified during project development.

Conversely, prevention of migration of rough fish or lampreys into upstream spawning grounds can also be accommodated, through the incorporation of suitable weirs or barriers into the culvert design.

Several variations in design are possible to accommodate fish passage:

1. ***Open-Bottom Culverts*** - or arch-type culverts on spread footings retain the use of the natural streambed. This approach is favored in streams with rocky or semi-resistant channels. Selection of a wider-than-usual arch span also provides for maintenance of natural stream velocities during moderate flows.
2. ***Tailpond Control Weirs*** - have proven to be the most practical approach to meet a minimum water depth requirement in the culvert barrel. A series of shallow weirs, with a notch or small weir for low-flow passage, have proven extremely effective. Larger weirs of more substantial design may require provision for separate fish ladder bypasses.

Structural plate pipe installation with fish baffles attached to invert.

3. ***Oversized Culverts*** - limiting velocities may require the use of oversized culverts. Oversizing and depressing the culvert invert below the natural stream bed permits gravel and stone deposition, resulting in a nearly natural stream bed within the culvert. Numerous velocity profiles taken during floods indicate that wall and bed friction permit fish passage along the wall. In effect, the roughness of the steel barrel assists in fish passage.
4. ***Culverts with baffles*** attached to the invert - considerable recent laboratory and prototype research has indicated that baffles or spoilers can significantly aid fish passage.
5. ***Multiple barrel installations*** - have proven particularly effective in wide, shallow streams. One barrel can be specifically designed with weir plates inside the barrel to provide for fish passage. The use of baffles in the barrel

of a drainage structure is also useful at sites where energy dissipation may be desirable.

Power Plant Cooling Water Lines

Power plants require vast amounts of cooling water. Structural plate steel pipes over 6 m in diameter have been used for water intakes. These lines are typically subaqueous, requiring special underwater construction by divers. Corrugated steel is especially suitable for this type of construction and has been used for such lines in the Great Lakes region.

Thermal pollution is a major problem with discharge water from power plants. In large deep bodies of water, long discharge lines of structural plate pipe can carry the heated effluent to sufficient depth for dilution or tempering. In shallower waters a unique approach is to use multiple lines of perforated structural plate pipe. Ontario Hydro has used the latter design at the Darlington generating plant in Ontario.

Sheet Flow Drainage

Intercepting sheet flow drainage at highway intersections, driveways and at the elevated shoulder of curves, has become a critical element in highway design. For example, snow pushed to the high-side shoulder on a curve melts as sunlight heats the pavement and shoulder. The runoff from the snow flows back across the roadway and freezes as evening temperatures fall. The result is sheet ice in a very critical area, creating a dangerous traffic hazard and repetitive maintenance problem.

The solution is a continuous longitudinal slotted corrugated steel pipe installed at the junction point between shoulder and roadway. This narrow slot intercepts runoff before it crosses the roadway area.

The system provides an inlet, runoff pipe, and grate all in one installation, and it can be perforated to double as a subdrain.

MISCELLANEOUS APPLICATIONS

Steel conduits serve many practical purposes other than for drainage and sewers. Some of these are:

Underpasses or tunnels for safe movement of people, animals and vehicles.

Materials handling in conveyor tunnels, aerial conduits or systems protected by conveyor covers; and storage bins for aggregates and other materials.

Utility conduits for protecting pipe lines and cables; also entries, escapeways, ventilation overcasts and air ducts.

Underpasses for Pedestrians and Animals

Pedestrian underpasses find their principal use in protecting people who would otherwise be forced to cross dangerous railway tracks, streets, or highways.

Safety is not the only advantage. Where a business, industry, or institution is divided by a busy street or railroad, a structural plate underpass is often the most convenient, economical and direct means of access.

Frequently, large farms and ranches are divided by a highway or railroad, requiring livestock to make repeated dangerous crossings. These barriers are also dangerous for animals in the wild. An underpass under the road is often the most satisfactory solution to this problem.

Snowmobile underpass.

Vehicular Underpasses

Large underpasses serve as grade separations for automotive and railway traffic. For example, a county or local road can be carried under a primary highway or railroad, often at less cost than building a bridge.

Material Handling Conveyors, Tunnels and Granaries

When a plant property is divided by a roadway or other barrier, a tunnel, or an aerial bridging conduit may serve to economically join the property. In some cases a conveyor cover for short or long distances can serve to protect the products from the elements while en route. Tracks, conveyor belts, or walkways may be used in these tunnels, bridging conduits, and conveyor covers. Conveyor tunnels of heavy wall thickness corrugated steel pipe are commonly used under storage piles of aggregates and other materials.

Storage bins of heavy curved corrugated steel plates are used on construction projects as well as in plant material yards.

Utility Conduits

Water, steam and gas lines, sewers, or power cables must often pass between buildings or beneath embankments or other surface obstacles. Good engineering practice calls for placing them within a conduit to protect against direct loading, impact, corrosion, temperature extremes, and against sabotage or vandalism.

For encasing sewers or high pressure lines, a corrugated steel conduit helps minimize damage to the fill and surface installations caused by sudden breaks. A conduit large enough to walk through provides better access for inspections and repairs. Brackets and supports are easily installed in pipes.

Utility conduits or tunnels may also double as air ducts. In the case of mines, munitions plants and other hazardous activities, these conduits may serve as ventilation overcasts and escapeways. See Aerial Conduits.

Corrugated pipe provides excellent conduit for utility lines.

Bent Protection Systems

In cases where surcharge piles from conveyors press against conveyor bent supports, corrugated steel structural plate may be used to reinforce and protect the bents.

AERIAL CONDUITS

Introduction

Aerial conduits include at least two classes of structures. The first is exposed sewers, gravity water lines and service tunnels or bridges. The second class includes ducts for air and various gases for ventilation or circulation. Aerial access bridges for safe movement of personnel or intra-plant materials handling also are described here.

Sewers and Water Lines

Often the need arises to establish a satisfactory gradient above ground for sanitary outfall sewers, irrigation or gravity water lines that cross depressions, streams, or channels. These exposed lines may be supported on bents, properly spaced, without need for beams or rails between piers.

Service Tunnels

Aerial conduits can be a good choice in industry rather than ground level crossings or subterranean passageways. Bridging between adjacent buildings of a manufacturing plant may be desirable for more direct access for employees, materials, finished products, or utility lines. Other applications are seen at mine tipples, quarries, or docks where the aerial lines may be quite lengthy.

Ventilation Ducts

Mining, industry and construction operations require various degrees of ventilation to protect against health hazards arising from toxic gases, excessive heat, moisture, dust and possible explosions. Ventilation codes and minimum standards usually are established and policed by provincial agencies. Table 1.1 gives friction coefficients for flow calculations. Corrugated steel pipe and other steel products have been used in ventilating systems for many years.

The use of explosives in tunneling or mining makes resistance to concussion and ease of coupling and uncoupling desirable characteristics of the ventilation pipe. Helically corrugated steel pipe and various forms of smooth wall pipe meet these requirements.

Ventilation ducts.

Table 1.1

Coefficients of friction for galvanized helically corrugated steel pipe for air conduction

Diameter of Pipe, mm	Coefficient of Friction, *f**	Diameter of Pipe, mm	Coefficient of Friction, *f**
150	0.029 - 0.033	300	0.023
200	0.033 - 0.038	400	0.028
250	0.036 - 0.041	450	0.032
		600	0.035

**From Darcy-Weisbach formula:* $h_f = f \frac{l}{d} \frac{v^2}{2g}$

where h_f = loss of head under conditions of flow, m
f = a dimensionless friction coefficient
l = length of pipe, m
v = velocity, m/sec
g = acceleration due to gravity, 9.806 m/sec^2
d = internal diameter of pipe, m

Fan Ducts

Mine ventilation conduits or fan ducts extend from the ventilating fan to the portal of the fresh air tunnel or air shaft. Corrugated steel ducts are widely used due to their high strength-to-weight ratio. Further, they are fully salvageable if a change of operations is necessary. They resist destruction from explosions, are fire resistant, and contribute to mine safety through confining explosion and fire in event of disaster. Corrugated steel ducts may range from 900 to 2200 mm diameter, with 1200, 1600 and 1800 mm being the most common sizes.

Normally, the duct is fabricated so that the fan opening is offset from the centerline of the main conduit to prevent damage to the fan in case of explosion. Spring-loaded explosion doors installed on the outlet end of the main duct serve to relieve pressures and minimize damage to ventilating equipment.

Air lock chambers can be installed on the side of the main conduit for entry into the air tunnel if desired.

Heat Manifolds and Stacks

Concrete aggregates must, at times, be heated or cooled prior to mixing in order to obtain satisfactory working and setting properties of the concrete. Corrugated steel pipe inserted through aggregate piles have been commonly used as heat conduits. Heat transfer through pipe walls is rapid. Also, ample structural strength and complete salvageability are advantageous.

Corrugated steel pipe is used for heat manifolds, ducts and stacks for smoke and fumes. Galvanized steel is satisfactory except where the fumes are corrosive, in which case protective coatings can be specified.

BIBLIOGRAPHY

AASHTO, *LRFD Bridge Design Specifications,* American Association of State Highway and Transportation Officials, 444 N. Capitol St. N.W., Ste 249, Washington, D.C. 20001.

AASHTO, *Standard Specifications for Highway Bridges,* American Association of State Highway and Transportation Officials, 444 N. Capitol St. N.W., Ste 249, Washington, D.C. 20001.

AREMA, *Engineering Manual,* American Railway Engineering and Maintenance-of-Way Association, 8201 Corporate Drive, Ste. 1125, Landover, MD 20785-2230.

ASTM, *Annual Book of ASTM Standards*, Coated Steel Products, Vol. 01.06,, American Society for testing and Materials, 100 Barr Harbor Drive, PO Box C700, West Conshohocken, PA 19428-2959.

CSA, *Canadian Highway Bridge Design Code,* Canadian Standards Association, 178 Rexdale Boulevard, Toronto, Ontario, Canada M9W 1R3.

CSPI, *Modern Sewer Design,* Canadian Ed., Corrugated Steel Pipe Institute, 652 Bishop St.N., Unit 2A, Cambridge, Ontario, Canada N3H 4V6.

CSPI, *Design of Underground Detention systems for Stormwater Management,* Corrugated Steel Pipe Institute, 652 Bishop St.N., Unit 2A, Cambridge, Ontario, Canada N3H 4V6.

CHAPTER 2

PRODUCT DETAILS & FABRICATION

INTRODUCTION

Various design challenges, and the application of corrugated steel pipe and other products to the solution of those challenges, have been described and illustrated in Chapter 1. These cover a wide segment of the construction field, including highways, railways, streets, urban areas, airports, industrial and commercial development, flood control and conservation.

These examples are not all-inclusive or complete solutions. They are intended only to show the adaptability and wide acceptance of one material - steel - for aiding in the solution of some of the problems facing the design engineer.

So vast are the annual expenditures for construction that the skills of resourceful qualified engineers are required to research (analyse), select, design and apply the available materials and products that most economically serve their purpose. For example, the cost of drainage facilities on the original U.S. interstate highway system was anticipated to be $4 billion, exclusive of bridges. Mass transportation, anti-pollution facilities, flood protection and other related construction projects can require drainage facilities in comparable measure. The need for carefully considering the economics of providing and maintaining these facilities is obvious.

Design Factors

Drainage design begins with reconnaissance and location surveys. The services of experienced soils and drainage engineers provide the best assurance of economical construction and subsequent minimum maintenance.

The following design factors must be considered:

1. Size, shape, alignment, grade and other configurations. These depend on hydrology and hydraulics, and on service requirements. (See Chapters 3, 4 and 5.)
2. Structural adequacy to meet embankment and superimposed live loads, along with hydraulic forces. (See Chapter 6.)
3. Trouble-free service through selection of materials to resist wear and provide durability. (See Chapter 8.)
4. Economics - First cost of materials and installation, plus maintenance cost evaluated on the basis of present worth. (See Chapter 9.)

In addition to these, the design engineer can make a value-analysis of such other factors as: suitable sources of supply, probable delivery schedule, influence of climate or season of the year, coordination with other construction schedules, supplier's assistance, and ease of repair or replacement in relation to the importance or service of the facility.

Alternate materials and designs should be considered so that the final selection will provide the most economical and satisfactory solution for the overall facility and its users.

Background of Corrugated Steel Conduits

Corrugating a flat sheet has long been known to increase its stiffness and strength. Corrugated steel sheets have been produced almost since the first rolling mill was built in England in 1784. But it was not until after 1890, when mass-produced steel sheets became abundant, that their use grew rapidly.

Corrugated steel pipe was first developed and used for culverts in 1896. As experience was gained in the use of this thin-wall, lightweight, shop-fabricated pipe, the diameters gradually increased to 2400 mm and larger. Fill heights became greater, even exceeding 30 m. A further development, in 1931, was structural plate pipe with larger corrugations, for field assembly. Diameters up to 8 m and arch spans up to 18 m have been installed successfully.

Shapes

The designer has a wide choice of standard cross-sectional shapes of corrugated steel and structural plate conduits as shown in Table 2.1. Size and service use may control the shape selected, with strength and economy as additional factors.

Corrugated steel pipe nested for shipment.

SECTION A: CORRUGATED STEEL PIPES

Description of Corrugations

The principal profiles for corrugated steel pipe are shown in Figure 2.1. Corrugations commonly used for pipes or conduits are circular arcs connected by tangents, and are described by pitch, depth and inside forming radius. Pitch is measured at right angles to the corrugations from crest to crest. A corrugation is named using its pitch and depth as “pitch by depth”.

For riveted pipe with circumferential (annular) seams, the corrugations are 68 by 13 mm.

For lock seam pipe, the seams and corrugations run helically (or spirally) around the pipe. For small diameters of subdrainage pipe (150, 200, 250 mm) the corrugation is nominally 38 x 6.5 mm. Larger sizes (diameters to 3600 mm, depending on profile) use 68 x 13 mm, 76 x 25 mm and 125 x 25 mm corrugations.

Another “corrugation” used for lock seam pipe is the spiral rib profile. Developed in the mid 1980's, the pipe wall is spirally formed using rectangularly

Table 2.1 Shapes and uses of corrugated conduits

Shape		Range of Sizes	Common Uses**
Round		150 mm to 15.8 m	Culverts, subdrains, sewers, service tunnels, etc. All plates same radius. For medium and high fills (or trenches).
Vertical ellipse 5% nominal	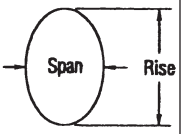	2440 mm to 6400 mm nominal; before elongating	Culverts, sewers, service tunnels, recovery tunnels. Plates of varying radii; shop fabrication. For appearance and where backfill compaction is only moderate.
Pipe-arch	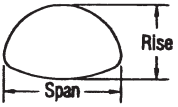	Span x Rise 450 x 340 mm to 7620 x 4240 mm	Where headroom is limited. Has hydraulic advantages at low flows.
Underpass	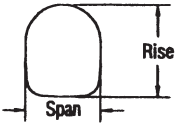	Span x Rise 1755 x 2005 mm to 1805 x 2490 mm	For pedestrians, livestock or vehicles.
Arch	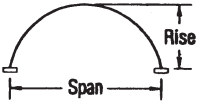	Span x Rise 1520 x 810 mm to 20 x 10 m	For low clearance large waterway openings and aesthetics.
Horizontal Ellipse	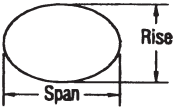	Span 1.6 m to 11.8 m	Culverts, grade separations, storm sewers, tunnels.
Pear	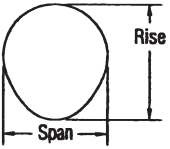	Span 7.2 m to 8.6 m	Grade separations, culverts, storm sewers, tunnels.
High Profile Arch	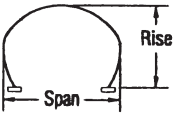	Span 6.3 m to 23.0 m	Culverts, grade separations, storm sewers and tunnels. Ammunition magazines, earth covered storage.
Low Profile Arch	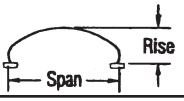	Span 6.1 m to 15.0 m	Low, wide waterway enclosures, culverts, storm sewers.
Box Culverts	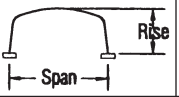	Span 3.2 m to 12.3 m	Low, wide waterway enclosures, culverts, storm sewers.
Specials		Various	Special fabrication for lining old structures or other special purposes.

For equal area or clearance, the round shape is generally more economical and simpler to assemble.

** Round pipe and pipe-arches are furnished as factory corrugated pipe, or structural plate pipe, depending on diameter or span. Other shapes are generally only furnished as structural plate or deep corrugated structural plate.

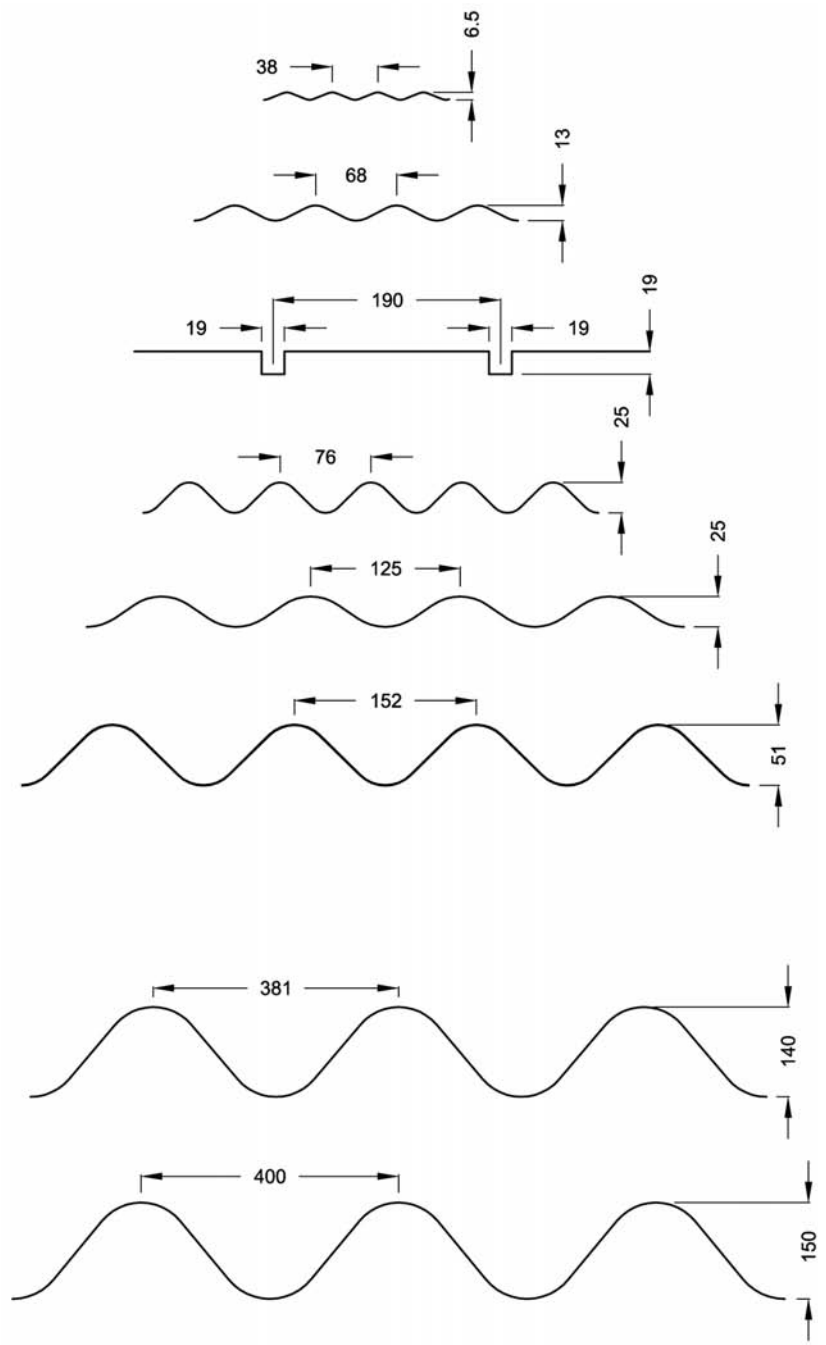

All dimensions in millimetres.

Figure 2.1 Commonly used corrugations.

formed ribs between flat wall areas. This unique profile configuration was developed for providing flow characteristics equal to those piping systems normally considered smooth wall. One profile configuration is available, with nominal dimensions 19 x 19 x 190 mm (rib pitch x rib depth x rib spacing), covering diameters from 450 through 2700 mm.

Section Properties

Section properties of the arc-and-tangent type of corrugation are derived mathematically using a design thickness which is a little different than the measured or specified thickness. The properties include area, A, moment of inertia, I, section modulus, S, and radius of gyration, r. Research by the American Iron and Steel Institute (AISI) has shown that failure loads in bending and deflection within the elastic range can be closely predicted by using computed section properties of the corrugated sheet. See Tables 2.2 through 2.6.

Sizes and Shapes

The number of corrugation profiles available is a result of the need for additional stiffness and strength for larger diameters of pipes. The standard sizes of round and pipe-arch corrugated steel pipes and spiral rib steel pipes, and their handling weights, are shown in Tables 2.7 through 2.11.

Table 2.2

Section design properties for corrugated CSP sheet
Corrugation profile: **38 x 6.5 mm** (helical)

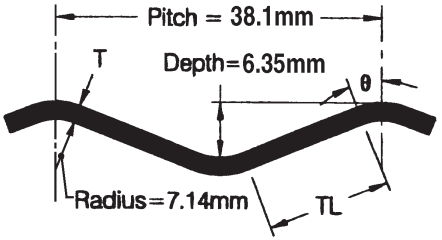

Wall Thickness		Area	Tangent Length	Tangent Angle	Moment of Inertia	Section Modulus	Radius of Gyration	Developed Width Factor
Specified	Design							
T	T	A	TL	θ	I	S	r	WF
mm	mm	mm^2/mm	mm	Degrees	mm^4/mm	mm^3/mm	mm	*
1.3	1.12	1.187	14.367	21.519	5.11	1.37	2.075	1.060
1.6	1.40	1.484	14.242	21.597	6.46	1.67	2.087	1.060
2.0	1.82	1.929	14.054	21.717	8.58	2.10	2.109	1.060

*WF is the ratio of the flat sheet width to the corrugated sheet width.
NOTE: Dimensions are subject to manufacturing tolerances.

Table 2.3

Section design properties for corrugated CSP sheet
Corrugation profile: **68 x 13 mm** (annular or helical)

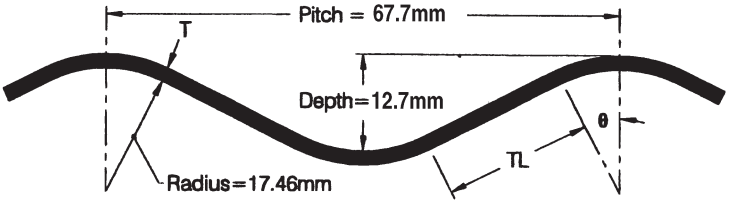

Wall Thickness		Area	Tangent Length	Tangent Angle	Moment of Inertia	Section Modulus	Radius of Gyration	Developed Width Factor
Specified	Design							
T	T	A	TL	θ	I	S	r	WF
mm	mm	mm^2/mm	mm	Degrees	mm^4/mm	mm^3/mm	mm	*
1.3	1.120	1.209	19.759	26.647	22.61	3.27	4.324	1.079
1.6	1.400	1.512	19.578	26.734	28.37	4.02	4.332	1.080
2.0	1.820	1.966	19.304	28.867	37.11	5.11	4.345	1.080
2.8	2.640	2.852	18.765	27.136	54.57	7.11	4.374	1.080
3.5	3.350	3.621	18.269	27.381	70.16	8.74	4.402	1.081
4.2	4.080	4.411	17.755	27.643	86.71	10.33	4.433	1.081

*WF is the ratio of the flat sheet width to the corrugated sheet width.
NOTE: Dimensions are subject to manufacturing tolerances.

Table 2.4

Section design properties for corrugated CSP sheet
Corrugation profile: **76 x 25 mm** (annular or helical)

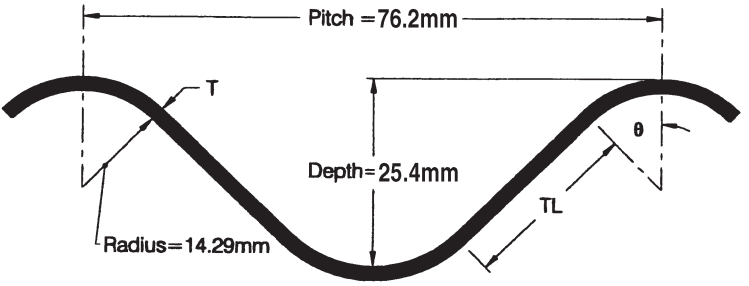

Wall Thickness		Area	Tangent Length	Tangent Angle	Moment of Inertia	Section Modulus	Radius of Gyration	Developed Width Factor
Specified	Design							
T	T	A	TL	θ	I	S	r	WF
mm	mm	mm^2/mm	mm	Degrees	mm^4/mm	mm^3/mm	mm	*
1.3	1.12	1.389	24.159	44.389	103.96	7.84	8.653	1.240
1.6	1.40	1.736	23.862	44.580	130.40	9.73	8.666	1.240
2.0	1.82	2.259	23.411	44.875	170.40	12.52	8.685	1.241
2.8	2.64	3.281	22.504	45.479	249.73	17.81	8.724	1.243
3.5	3.35	4.169	21.688	46.035	319.77	22.24	8.758	1.244
4.2	4.08	5.084	20.815	46.645	393.12	26.67	8.794	1.246

*WF is the ratio of the flat sheet width to the corrugated sheet width.
NOTE: Dimensions are subject to manufacturing tolerances.

Table 2.5

Section design properties for corrugated CSP sheet
Corrugation profile: **125 x 25 mm** (helical)

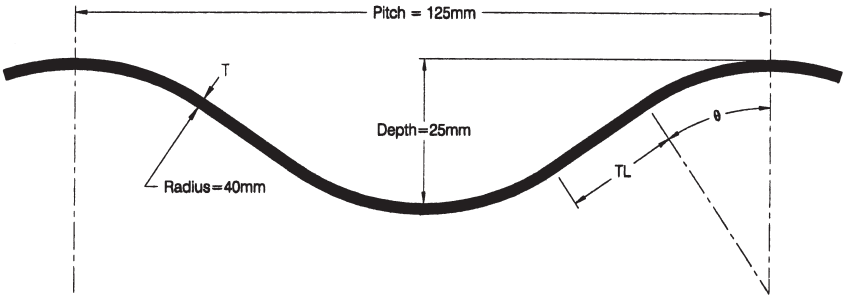

Wall Thickness		Area	Tangent Length	Tangent Angle	Moment of Inertia	Elastic Section Modulus	Plastic Section Modulus	Radius of Gyration	Developed Width Factor
Specified	Design								
T	T	A	TL	θ	I	S	Z	r	WF
mm	mm	mm^2/mm	mm	Degrees	mm^4/mm	mm^3/mm	mm^3/mm	mm	*
1.6	1.40	1.549	18.568	35.564	133.30	9.73	12.94	9.277	1.106
2.0	1.82	2.014	17.970	35.811	173.72	12.49	16.86	9.287	1.107
2.8	2.64	2.923	16.742	36.330	253.24	17.68	24.54	9.308	1.107
3.5	3.35	3.711	15.600	36.826	322.74	21.99	31.24	9.326	1.108
4.2	4.08	4.521	14.332	37.392	394.84	26.25	38.17	9.345	1.108

*WF is the ratio of the flat sheet width to the corrugated sheet width.
NOTE: Dimensions are subject to manufacturing tolerances.

Table 2.6

Section design properties for spiral rib pipe
Rib profile: **19 x 19 x 190 mm** (helical)

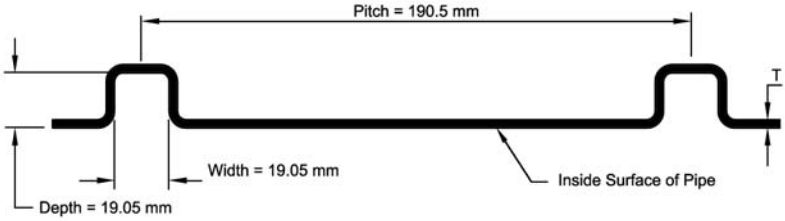

Wall Thickness		Area	Moment of Inertia	Section Modulus	Radius of Gyration	Developed Width Factor
Specified	Design					
T	T	A	I	S	r	WF
mm	mm	mm^2/mm	mm^4/mm	mm^3/mm	mm	*
1.6	1.519	1.082	58.829	4.016	7.375	1.170
2.0	1.897	1.513	77.674	5.054	7.164	1.168
2.8	2.657	2.523	117.167	7.129	6.815	1.165

*WF is the ratio of the flat sheet width to the corrugated sheet width.
Properties are effective section properties at full yield stress.
Note: Dimensions are subject to manufacturing tolerances.

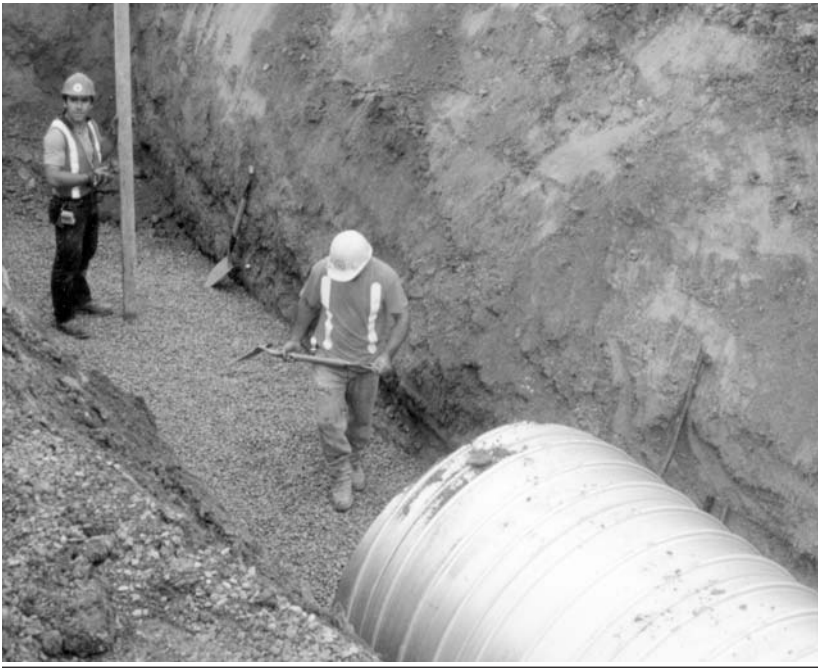

Placing and checking of elevation of pipe bedding.

Table 2.7 Corrugated steel pipe (CSP) - standard round diameters, end areas, and handling weights (kg/m)**

A. Corrugation Profile: 38 x 6.5 mm

Diameter, mm	End Area, m^2	Plain Metallic Coated						Asphalt-Coated					
		Specified Wall Thickness, mm											
		1.3	1.6	2.0	2.8	3.5	4.2	1.3	1.6	2.0	2.8	3.5	4.2
150	0.018	5.9	7.2	-	-	-	-	7.2	8.5	-	-	-	-
200	0.031	7.7	9.5	-	-	-	-	9.4	11	-	-	-	-
250	0.049	9.6	12	-	-	-	-	12	14	-	-	-	-

B.Corrugation Profile: 68 x 13 mm

Diameter, mm	End Area, m^2	Plain Metallic Coated						Asphalt-Coated						Asphalt-Coated, *Paved-Invert						Asphalt-Coated, Smooth-Lined					
		Specified Wall Thickness,mm																							
		1.3	1.6	2.0	2.8	3.5	4.2	1.3	1.6	2.0	2.8	3.5	4.2	1.3	1.6	2.0	2.8	3.5	4.2	1.3	1.6	2.0	2.8	3.5	4.2
300	0.07	12	14	18	-	-	-	15	17	21	-	-	-	17	19	23	-	-	-	22	24	28	-	-	-
400	0.13	16	19	24	-	-	-	20	23	28	-	-	-	22	25	30	-	-	-	30	33	38	-	-	-
500	0.20	19	24	30	41	-	-	24	29	35	46	-	-	27	32	38	49	-	-	36	41	47	58	-	-
600	0.28	23	28	35	49	-	-	28	33	40	54	-	-	32	37	44	58	-	-	44	49	56	70	-	-
700	0.38	-	33	41	57	-	-	-	39	47	63	-	-	-	44	52	68	-	-	-	57	65	81	-	-
800	0.50	-	37	47	65	-	-	-	44	54	72	-	-	-	49	59	77	-	-	-	64	74	92	-	-
900	0.64	-	42	53	73	90	108	-	50	61	81	98	116	-	56	67	87	104	122	-	73	84	104	121	139
1000	0.79	-	47	58	81	100	120	-	56	67	90	109	129	-	62	73	96	115	135	-	81	92	115	134	154
1200	1.13	-	56	70	97	120	144	-	66	80	107	130	154	-	74	88	115	138	162	-	97	111	138	161	185
1400	1.54	-	-	81	113	140	168	-	-	93	125	152	180	-	-	102	134	161	189	-	-	129	161	188	216
1600	2.01	-	-	93	130	160	192	-	-	107	144	174	206	-	-	117	154	184	216	-	-	148	185	215	247
1800	2.54	-	-	-	146	179	215	-	-	-	162	195	231	-	-	-	174	206	242	-	-	-	208	241	277
2000	3.14	-	-	-	162	199	239	-	-	-	179	216	256	-	-	-	192	229	269	-	-	-	230	267	307
2200	3.80	-	-	-	-	219	263	-	-	-	-	238	282	-	-	-	-	252	296	-	-	-	-	294	338
2400	4.52	-	-	-	-	-	287	-	-	-	-	-	308	-	-	-	-	-	323	-	-	-	-	-	369

NOTES: * Weight based on a pavement covering 25% of the periphery. **Other corrugation profiles in Table 2.8.

1. The weights are based on helical lockseam fabrication, and are approximate. Riveted CSP weighs slightly more.
2. Handling weights not shown indicate that particular size or steel thickness is either not generally recommended practice, or may not be possible to fabricate. Many size/thickness combinations not shown may be available. For further or specific details, consult your local CSP fabricators.

Table 2.8 Corrugated steel pipe (CSP) - standard round diameters, end areas, and handling weights (kg/m)**

Diameter, mm	End Area, m^2	Plain Metallic Coated					Asphalt-Coated					Asphalt-Coated, *Paved-Invert					Asphalt-Coated, Smooth-Lined				
		C. Corrugation Profile: 76 x 25 mm																			
		Specified Wall Thickness, mm																			
		1.6	2.0	2.8	3.5	4.2	1.6	2.0	2.8	3.5	4.2	1.6	2.0	2.8	3.5	4.2	1.6	2.0	2.8	3.5	4.2
1200	1.13	65	81	112	-	-	77	93	124	-	-	90	106	137	-	-	130	146	177	-	-
1400	1.54	75	94	131	161	-	89	108	145	175	-	104	124	160	190	-	151	170	207	237	-
1600	2.01	86	107	149	184	221	102	123	165	200	237	120	141	183	218	255	173	194	236	271	308
1800	2.54	96	120	167	206	248	114	138	185	224	266	134	158	205	244	286	194	218	264	304	346
2000	3.14	107	133	186	229	275	127	153	206	249	295	149	175	228	271	317	215	241	294	337	383
2200	3.80	117	147	204	252	302	139	169	226	274	324	163	193	250	298	348	236	266	323	371	421
2400	4.52	128	160	221	274	329	152	184	245	298	353	178	210	272	324	380	258	290	351	404	459
2700	5.73	144	179	250	308	370	171	206	277	335	397	201	236	307	365	427	290	325	396	454	516
3000	7.07	-	199	278	342	411	-	229	308	372	441	-	262	341	405	474	-	362	440	504	574
3300	8.55	-	-	305	376	451	-	-	338	409	484	-	-	374	445	520	-	-	484	555	630
3600	10.18	-	-	-	410	492	-	-	-	446	528	-	-	-	486	568	-	-	-	605	687
		D. Corrugation Profile: 125 x 25 mm																			
		Specified Wall Thickness, mm																			
		1.6	2.0	2.8	3.5	4.2	1.6	2.0	2.8	3.5	4.2	1.6	2.0	2.8	3.5	4.2	1.6	2.0	2.8	3.5	4.2
1200	1.13	57	71	100	124	-	68	82	111	135	-	82	96	124	148	-	123	137	166	190	-
1400	1.54	66	83	116	144	-	79	96	129	157	-	95	112	145	173	-	143	160	193	221	-
1600	2.01	76	95	132	165	197	90	109	147	179	211	108	127	165	198	230	163	182	220	252	284
1800	2.54	85	106	148	185	221	101	122	165	201	237	122	143	185	222	258	184	205	247	284	320
2000	3.14	94	118	165	205	245	112	136	183	223	263	136	159	206	246	286	204	228	274	315	355
2200	3.80	104	129	181	225	269	123	149	201	245	289	149	175	226	270	314	224	250	302	346	390
2400	4.52	113	141	197	245	293	135	163	219	267	315	162	190	247	295	343	245	273	329	377	425
2700	5.73	127	159	222	276	330	151	183	246	300	354	183	214	277	331	385	275	307	370	424	478
3000	7.07	-	176	246	306	366	-	203	273	333	393	-	238	307	368	428	-	340	410	470	530
3300	8.55	-	-	270	336	402	-	-	300	366	432	-	-	338	404	470	-	-	451	517	583
3600	10.18	-	-	-	367	438	-	-	-	399	470	-	-	-	440	511	-	-	-	564	635

NOTE: *Weight based on a pavement covering 25% of the periphery. ** Other corrugation profiles in Table 2.7.

1. The weights are based on helical lockseam fabrication, and are approximate. Riveted CSP weighs slightly more.
2. Handling weights not shown indicate that particular size or steel thickness is either not generally recommended practice, or may not be possible to fabricate. Many size/thickness combinations not shown may be available. For further or specific details, consult your local CSP fabricators.

Table 2.9

CSP pipe-arch shapes and handling weights (kg/m)

Span x Rise, mm	Equivalent Round Diameter, mm	End Area, m^2	Plain Metallic Coated					Asphalt-Coated					Asphalt-Coated **Paved-Invert				
			Specified Wall Thickness, mm														
			1.6	2.0	2.8	3.5	4.2	1.6	2.0	2.8	3.5	4.2	1.6	2.0	2.8	3.5	4.2
A. Corrugation Profile: 68 x 13 mm																	
450 x 340	400	0.11	19	24	-	-	-	23	28	-	-	-	26	31	-	-	-
560 x 420	500	0.19	24	30	41	-	-	29	35	46	-	-	34	40	51	-	-
680 x 500	600	0.27	28	35	49	-	-	33	40	54	-	-	39	46	60	-	-
800 x 580	700	0.37	33	41	57	-	-	39	47	63	-	-	46	54	70	-	-
910 x 660	800	0.48	37	47	65	-	-	44	54	72	-	-	52	62	80	-	-
1030 x 740	900	0.61	42	53	73	90	108	50	61	81	98	116	59	70	90	107	125
1150 x 820	1000	0.74	47	58	81	100	120	56	67	90	109	129	66	77	100	119	139
1390 x 970	1200	1.06	56	70	97	120	144	66	80	107	130	154	78	92	119	142	166
1630 x 1120	1400	1.44	-	81	113	140	168	-	93	125	152	180	-	107	139	166	194
1880 x 1260	1600	1.87	-	93	130	160	192	-	107	144	174	206	-	123	160	190	222
2130 x 1400	1800	2.36	-	-	146	179	215	-	-	162	195	231	-	-	180	213	249
B. Corrugation Profile: 125 x 25 mm																	
1780 x 1360	1600	1.93	-	95	132	165	-	-	109	147	179	-	-	127	165	198	-
2010 x 1530	1800	2.44	-	106	148	185	-	-	122	165	201	-	-	143	185	222	-
2230 x 1700	2000	2.97	-	118	165	205	245	-	136	183	223	263	`-	159	206	246	286
2500 x 1830	2200	3.44	-	129	181	225	269	-	149	201	245	289	-	175	226	270	314
2800 x 1950	2400	4.27	-	141	197	245	293	-	163	219	267	315	-	190	247	295	343
3300 x 2080	2700	5.39	-	-	222	276	330	-	-	246	300	354	-	-	277	331	385
3650 x 2280	3000	6.60	-	-	-	306	366	-	-	-	333	393	-	-	-	368	428
3890 x 2690	3300	8.29	-	-	-	-	402	-	-	-	-	432	-	-	-	-	470
4370 x 2870	3600	9.76	-	-	-	-	438	-	-		-	470	-	-	-	-	511

Notes: **Weight based on a pavement covering 40% of the periphery.

1. The weights are based on helical lockseam fabrication, and are approximate. Riveted CSP will weigh slightly more.
2. Handling weights not shown indicate that particular size or steel thickness is either not generally recommended practice, or may not be possible to fabricate. Many size/thickness combinations not shown may be available. For further or specific details, consult your local CSP fabricators.

Table 2.10

Spiral rib round pipe handling weights (kg/m):
19 x 19 x 190 mm rib profile
Galvanized Steel or Aluminized Steel Type 2

Diameter (mm)	End Area m^2	Specified Wall Thickness (mm) 1.6	2.0	2.8
450	0.16	21.9	26.8	-
525	0.22	25.6	31.3	42.6
600	0.28	29.2	35.8	48.6
750	0.44	36.5	44.7	60.8
900	0.64	43.8	53.6	72.9
1050	0.87	51.1	62.6	85.1
1200	1.13	58.4	71.5	97.3
1350	1.43	-	80.5	109.4
1500	1.77	-	89.4	121.6
1650	2.14	-	98.3	133.7
1800	2.54	-	107.3	145.9
2100	3.46	-	125.2	170.2
2400	4.52	-	-	194.5
2600	5.31	-	-	210.7

Notes: Handling weights are approximate.
Those weights not shown indicate that particular size or steel thickness is either not generally recommended practice, or may not be possible to fabricate.
Size/thickness combinations not shown may be available. For further or specific details, consult your local spiral rib pipe fabricator.

Table 2.11

Spiral rib pipe-arch shapes and handling weights (kg/m)
Aluminized Steel Type 2 or Galvanized Steel

Span (mm)	Rise (mm)	Equivalent Round Diameter (mm)	End Area (m^2)	Specified Wall Thickness (mm) 1.6	2.0	2.8
500	410	450	0.15	21.9	26.8	
580	490	525	0.21	25.6	31.3	42.6
680	540	600	0.27	29.2	35.8	48.6
830	660	750	0.43	36.5	44.7	60.8
1010	790	900	0.62	43.8	53.6	72.9
1160	920	1050	0.85		62.6	85.1
1340	1050	1200	1.12			97.3
1520	1200	1350	1.44			109.4
1670	1300	1500	1.79			121.6
1850	1400	1650	2.15			133.7

Notes: Handling weights are approximate.
Those weights not shown indicate that particular size or steel thickness is either not generally recommended practice, or may not be possible to fabricate.
Size/thickness combinations not shown may be available. For further or specific details, consult your local spiral rib pipe fabricator.

Perforated Pipe

Corrugated steel pipe is available with perforations for collection or dispersion of water underground.

Subdrainage, or groundwater control, is the most common use for perforated corrugated steel pipe. In this application, only the lower half of the pipe is perforated, following the standard shown in Figure 2.2 and Table 2.12. Most fabricators are equipped to furnish 9.5 mm round holes. Other sizes and configurations are available. The most common standard pattern is thirty 9.5 mm round holes per square metre of pipe surface.

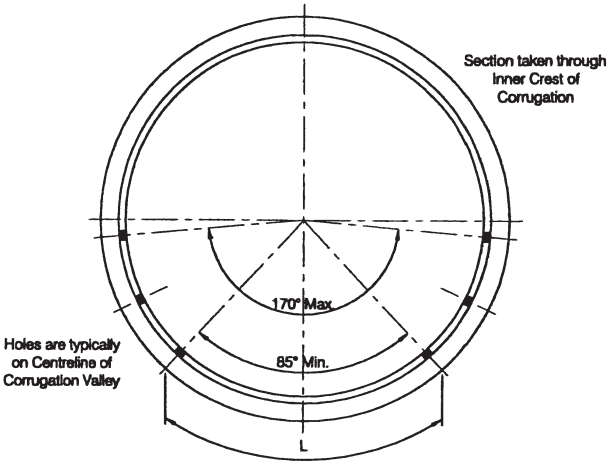

Figure 2.2 Invert perforating detail.

Table 2.12 Invert perforated pipe data and handling weights, kg/m

Inside Dia.	Minimum Rows of Perfor-ations	Minimum Arc Length L	End Area	Specified Wall Thickness, mm							
				Galvanized				Asphalt Coated			
mm		mm	m^2	1.0	1.3	1.6	2.0	1.0	1.3	1.6	2.0
150	4	120	0.018	4.5	5.9	7.2		5.8	7.2	8.5	
200	4	160	0.031		7.7	9.5	12		9.4	11	
250	4	195	0.049		9.6	12	15		12	14	
300	6	240	0.07		12	14	18		15	17	21
400	6	315	0.13		16	19	24		20	23	28
500	Random		0.20		19	24	30		24	29	35
600	Random		0.28		23	28	35		28	33	40

Fully-perforated helical CSP is ideally suited for retention of storm water, permitting slow infiltration, or recharge, into the trench walls. Underground disposal of storm water runoff in urban development design has the potential for saving millions of dollars in taxpayer money. Recharge design makes the concept of zero increase in runoff possible thus avoiding overloading trunk storm drains, and/or streams and rivers. The cost of reconstructing existing drains or channel improvements usually will prove to be far greater than recharge design.

Environmental considerations also favour recharge design. Natural streams can be maintained for fish passage, and water-poor areas can be enriched. See Chapter 6 of Modern Sewer Design for further details. In this application, the pipe is perforated for the full 360 degrees. Perforations in fully perforated helical pipe usually provide and opening area of not less than 2.3% of the pipe surface.

Conveyor Covers

Perhaps the most commonly used cover is a half-circle steel arch section (Figure 2.3), 1220 mm long, supported on band sheets 250 mm wide. These band sheets in turn are supported by bolting to the conveyor frame.

Diameters of support bands and cover sheets are optional, to meet the conveyor equipment manufacturer's designs, but usually range from 600 to 1800 mm. The corrugated sheets are supplied in suitable thicknesses of steel. Cover sheets are secured by one bolt at each corner and can be removed quickly when necessary. Preferably the corrugations should run transverse to the conveyor for greater strength with minimum framing. Where the arch covers not only the conveyor belt but also the walkway, sheets with larger corrugations (125 x 25 mm or 152 x 51 mm) can be provided.

A horseshoe shape is used where weighing equipment or other facilities require a high cover. A circular or elliptical shape can also serve as a beam to strengthen the span between bents in aerial conveyor systems.

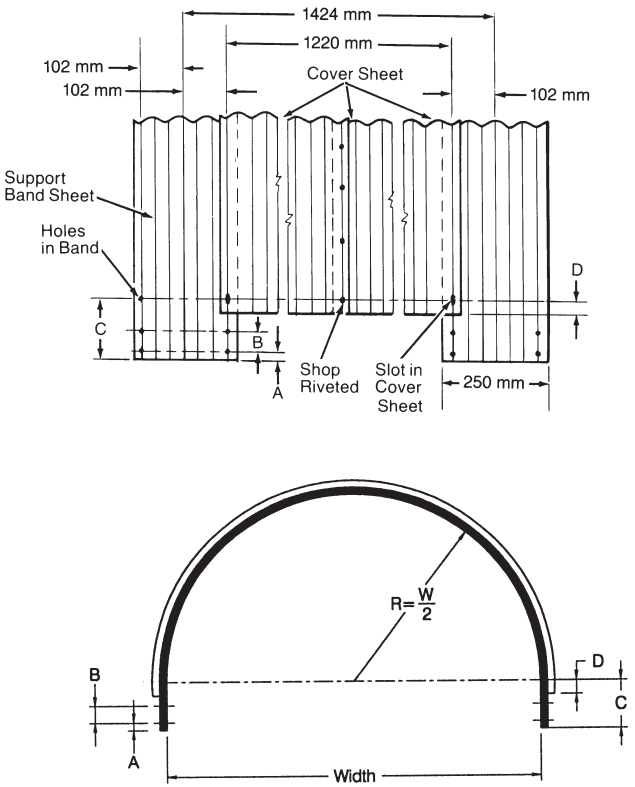

Figure 2.3 Typical corrugated steel conveyor cover with removable cover sheets.

Nestable Corrugated Steel Pipe

Nesting, a shipping technique developed in the 1930's, was devised to improve competitiveness of products bound for overseas markets. It provides an economical solution to reduce shipping space.

Nestable pipe offers a fast and economical solution to contractors and owners who require a strong casing to place around an already installed utility line. This can be done easily without disrupting the line to be encased. These casings may be used for lines under high fills, or buildings, where access for servicing becomes important.

With urethane foam insulation, the CSP utilidor has proven effective in servicing northern villages.

There are two standard methods used in attaching the half-round pipe segments together; interlocking notches and mating flanges. Flanged nestable pipe and notched nestable pipe details are shown in Figures 2.4 and 2.5 respectively. Handling weights for the two types of pipe are provided in Tables 2.13 and 2.14.

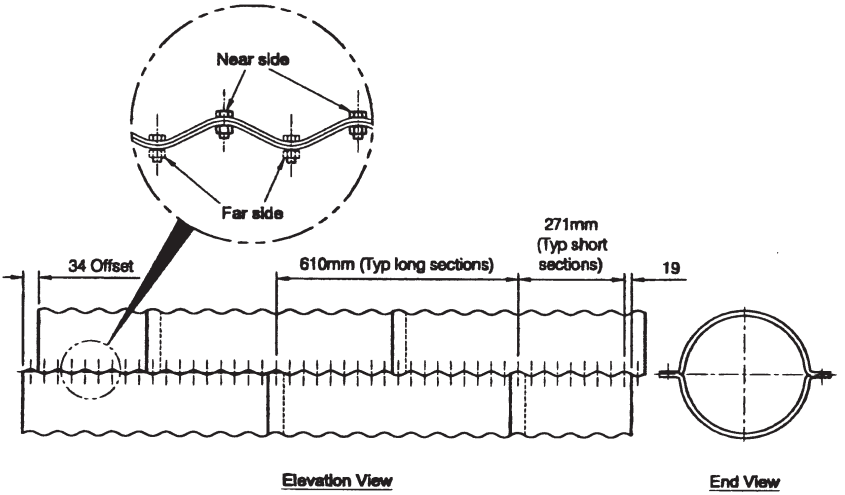

Figure 2.4 Flanged nestable pipe.

Table 2.13 Flanged nestable pipe handling weights, kg/m

Diameter (mm)	Specified Wall Thickness (mm)			
	1.6	2.0	2.8	3.5
300	18	22	31	39
400	22	28	39	49
450	24	31	43	54
500	27	34	48	60
600	31	39	54	68
700	36	45	62	79
800	41	51	70	89
900	45	56	77	97
1000	48	61	83	101
1200	59	74	102	126
1400	68	85	118	146
1600	78	97	134	166

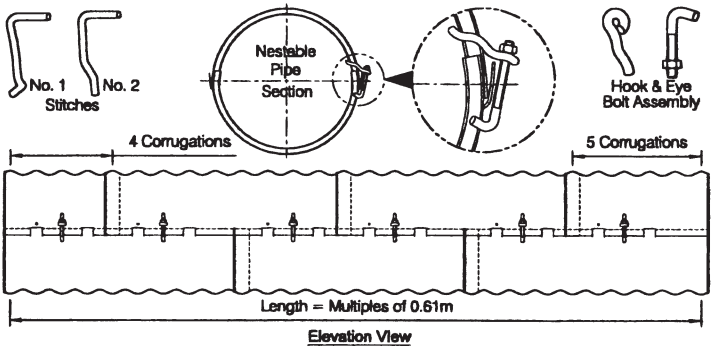

Figure 2.5 Notched nestable pipe can be joined with stitches or a hook and eye bolt assembly.

Table 2.14 Notched nestable pipe handling weights, kg/m

Diameter (mm)	Specified Wall Thickness (mm)				
	1.6	2.0	2.8	3.5	4.2
300	15	19	26	32	38
400	20	25	34	42	50
450	23	29	38	47	57
500	25	32	43	53	63
600	29	37	51	63	76
700	34	43	59	73	88
800	39	49	68	84	100
900	44	56	77	95	113
1000	49	61	85	105	126
1200	59	74	102	126	151
1400	69	85	119	147	176
1600	78	98	137	168	202
1800	88	110	153	118	226
2000	98	122	170	210	252

Ditch Liner

Half-round flanged nestable pipe is used widely as a flume or downslope drain. Wood sills and cross-braces with anchors embedded in the embankment stabilize the flume.

Concrete Lined CSP

This product consists of a corrugated steel pipe with an interior lining composed of an extremely dense, high strength concrete. The lining provides a superior wearing surface for extended structure life as well as a smooth interior for improved hydraulics.

CSP Slotted Drain Inlets

By welding a narrow section of grating in the top of a corrugated steel pipe, a continuous grate inlet is achieved. Originally conceived to pick up sheet flow in roadway medians, parking lots, airports, etc., this product has proven even more useful in curb inlets. Detailed hydraulic design information is provided in Chapter 4, Hydraulics.

CSP slotted drain inlet.

SECTION B: STRUCTURAL PLATE AND DEEP CORRUGATED STRUCTURAL PLATE PRODUCTS

1. STRUCTURAL PLATE

Product Description

Structural plate pipes are structures where corrugated steel sections are bolted together to form the shape of the structure. The sections are commonly referred to as plates.

The structural plate 152 x 51 mm corrugation is the standard in the Canadian structural plate industry. The corrugation is shown in Figure 2.1.

The corrugations are at right angles to the length of the plate. The length of a plate is measured in a direction parallel to the length of the structure. The width of a plate is, therefore, measured in a direction perpendicular to the length of the structure, around the periphery of the structure.

Standard plates are fabricated in three lengths and several widths, as shown in Table 2.15 and Figures 2.6 and 2.7. The plate width designation, N, is used to describe the various plate widths available. N is the distance between two circumferential bolt holes, or one circumferential bolt hole space (circumferential refers to the direction around the periphery of the structure, at right angles to the length of the structure). For instance, a 5N plate has a net width of 5 circumferential bolt hole spaces (see Figure 2.6) and an 8N plate has a net width of 8 circumferential bolt hole spaces (see Figure 2.7). The bolt hole space, N, is 9.6 inches or 243.84 mm (244 mm nominal). Note that not all widths are available in all lengths. The width-length combinations are shown in Table 2.16.

Plates are furnished curved to various radii and are clearly identified by the fabricator for field assembly.

The plates are available in thicknesses from 3.0 to 7.0 mm.

Masses of individual plate sections are shown in Table 2.16. While the correct terminology is “mass”, the term “weight” will be used in the following text and tables. Approximate weights of structural plate structures are readily calculated using these values.

Section Properties

Section properties, used for design, are provided in Table 2.17. As with corrugated steel pipe corrugations, properties of the arc-and-tangent structural plate corrugation are derived mathematically using the design thickness. The properties in the table include area, moment of inertia, section modulus and radius of gyration.

Sizes and Shapes

The plates are assembled into various shapes as indicated in Tables 2.18 through 2.26. The shapes include round, pipe-arch, single radius arch, horizontal ellipse, low profile arch, high profile arch, pear, underpass and vertical ellipse. Special shapes, and other sizes of standard shapes beyond what is shown in the tables, are also available. Detailed assembly instructions accompany each structure.

Table 2.15

Structural plate sections, 152 x 51 corrugation
Profile details of uncurved plates

Nominal Plate Width Designation N	Net Width, mm	Overall Width, mm	Spaces (N) at 244 mm	No. of Circumferential Bolt Holes
3N	732	846	3	4
4N	975	1090	4	5
5N	1219	1334	5	6
6N	1463	1577	6	7
7N	1707	1821	7	8
8N	1951	2065	8	9
9N	2195	2309	9	10
10N	2438	2553	10	11
11N	2682	2797	11	12
12N	2926	3040	12	13
13N	3170	3284	13	14
14N	3414	3528	14	15
15N	3658	3772	15	16
16N	3901	4016	16	17

N = 244 mm nominal (243.84 mm theoretical)

Table 2.16

Weight of structural plate sections

Plate Width Designation	Length, mm	Approximate Weight of Galvanized Plates[1], kg Specified Wall Thickness, mm					Number of Assembly Bolts/Plate
		3	4	5	6	7	
5N	3048	132	176	221	265	309	44
5N	3658	158	211	264	316	369	52
6N	3048	156	209	261	313	365	45
6N	3658	187	249	312	374	436	53
9N	3048	229	305	381	457	534	48
9N	3658	273	364	456	547	638	56
3N	1067	30	40	50	60	70	16
4N	1067	38	51	64	77	90	17
5N	1067	47	63	78	94	109	18
6N	1067	58	78	97	117	136	19
7N	1067	67	90	112	135	157	20
8N	1067	76	102	127	152	178	21
9N	1067	85	114	142	170	199	22
10N	1067	94	126	157	188	220	23
11N	1067	103	138	172	206	241	24
12N	1067	112	150	187	224	262	25
13N	1067	121	161	202	242	283	26
14N	1067	130	173	217	260	304	27
15N	1067	139	185	232	278	325	28
16N	1067	139	185	232	278	325	29

Notes 1. Bolt weight not included.

2. For galvanized plate thicknesses 3.0 and 4.0 mm, bolt lengths are 32 and 38 mm; for thicknesses 5.0 and 6.0 mm, bolt lengths are 38 and 44 mm; for 7.0 mm thickness, bolt lengths are 38 and 51 mm. Bolts are colour coded for the different lengths.

3. Weight of bolts and nuts in kg per hundred:
   32 mm = 23.6 51 mm = 27.0
   38 mm = 25.0 76 mm = 32.9
   44 mm = 25.9

4. To compute the approximate weight of structure per metre of length: (1) multiply the weight from the table by the number of plates in the periphery; (2) add weight of bolts and nuts; and (3) divide by plate length.

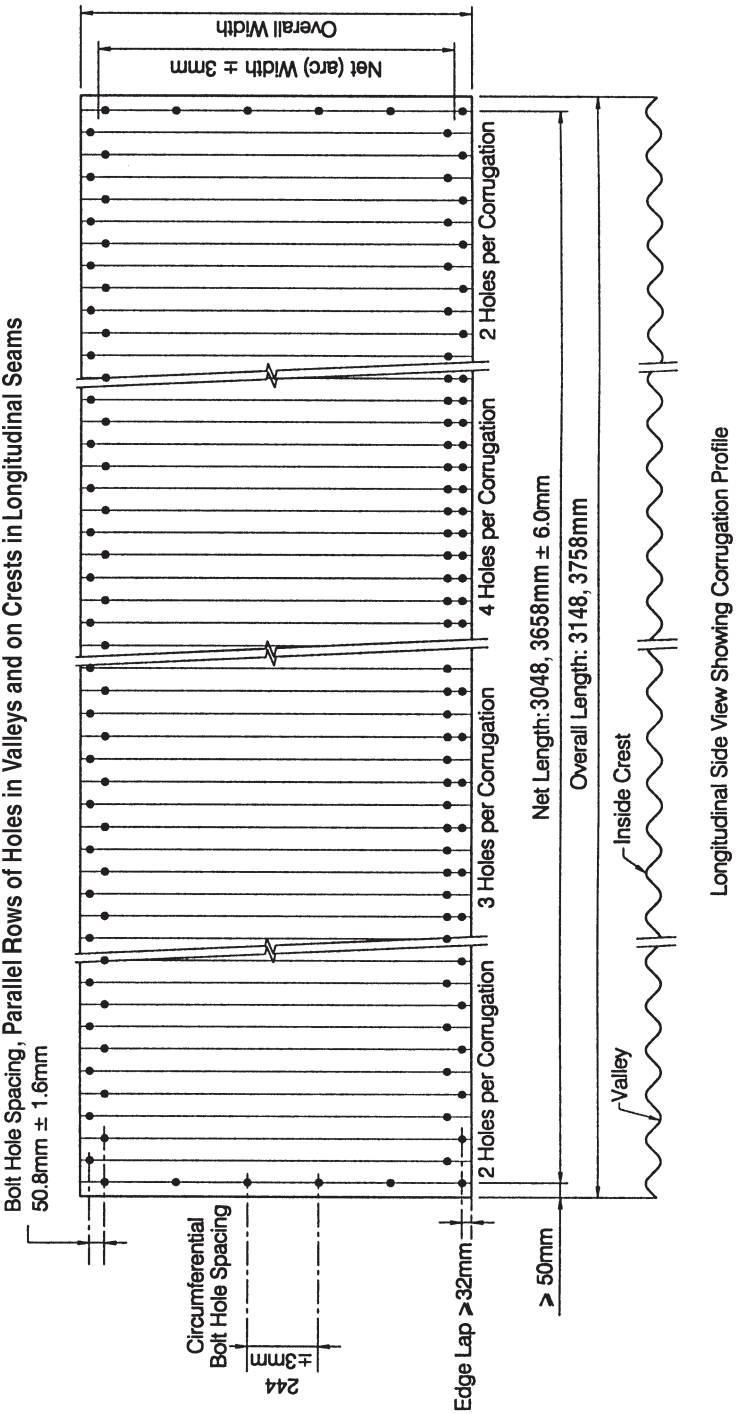

Figure 2.6 Configuration of structural plate sheets.

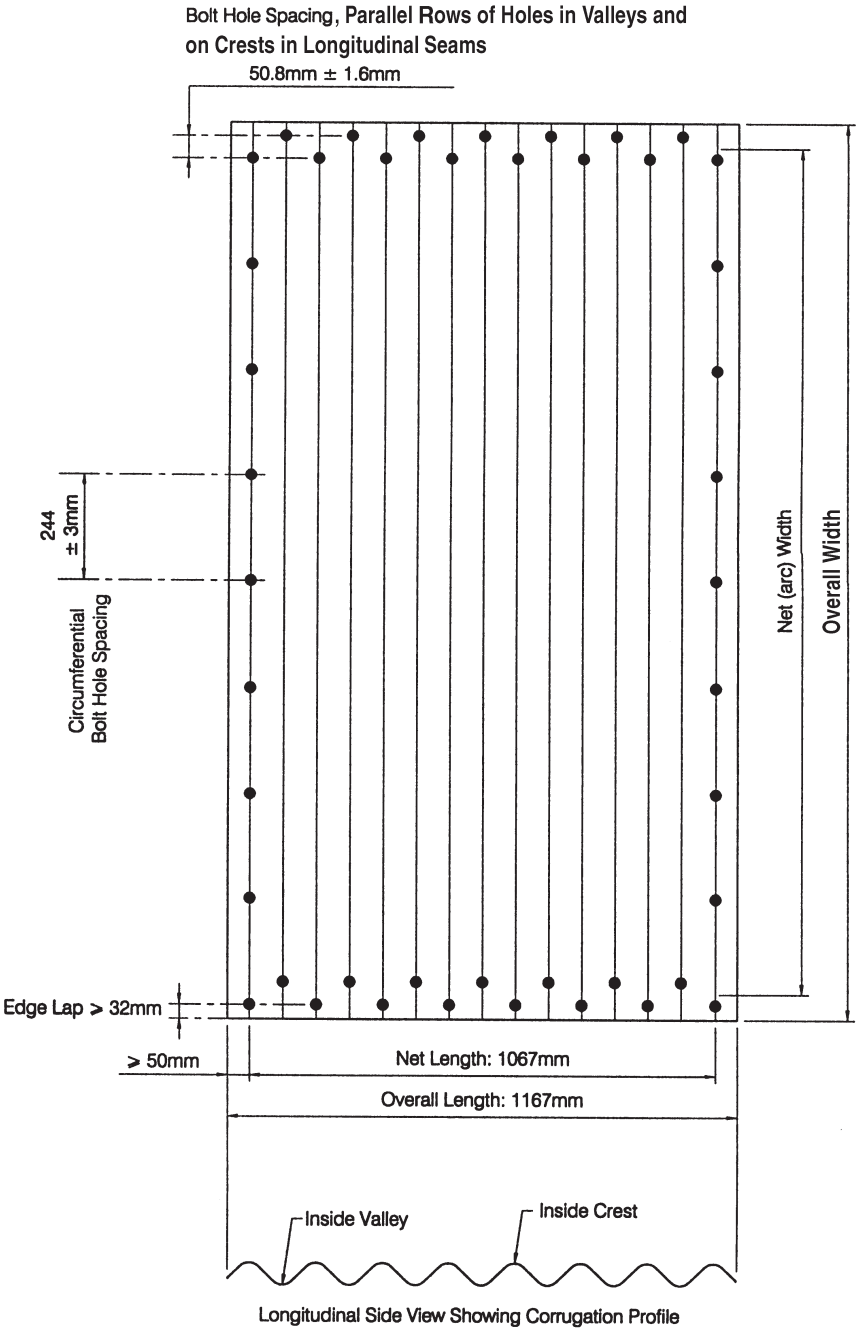

Figure 2.7 Alternate structural plate configuration.

Table 2.17

Section properties for corrugated structural plate
Corrugation profile: **152 x 51 mm**

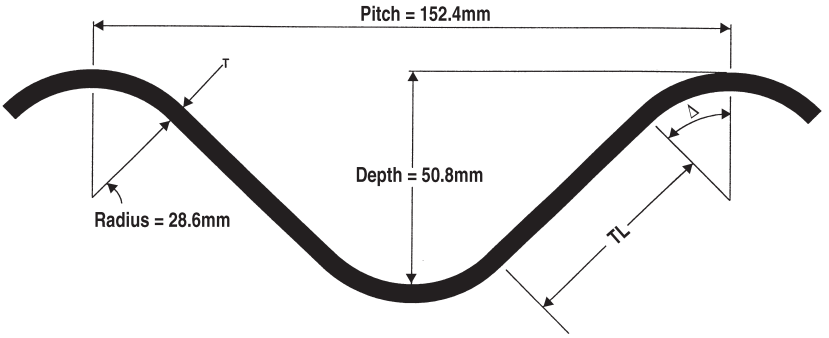

Wall Thickness		Area	Tangent Length	Tangent Angle	Moment of Inertia	Section Modulus	Radius of Gyration	Developed Width Factor
Specified	Design							
T	T	A	TL	Δ	I	S	r	WF
mm		mm^2/mm	mm	Degrees	mm^4/mm	mm^3/mm	mm	*
3.0	2.84	3.522	47.876	44.531	1057.25	39.42	17.326	1.240
4.0	3.89	4.828	46.748	44.899	1457.56	53.30	17.375	1.241
5.0	4.95	6.149	45.582	45.286	1867.12	66.98	17.425	1.242
6.0	6.00	7.461	44.396	45.686	2278.31	80.22	17.475	1.243
7.0	7.00	8.712	43.237	46.083	2675.11	92.56	17.523	1.244

*WF is the ratio of the flat plate width to the corrugated plate width.
Dimensions are subject to manufacturing tolerances.

Table 2.18

Structural plate corrugated round pipe
152 x 51 mm corrugation profile
Standard diameters and unit weight of assembled structure

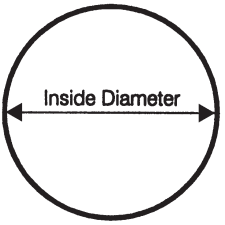

Inside Diameter, mm	Periphery (Hole Spaces), N	End Area, m^2	Unit Weight of Structure,* kg/m Bolts Included — Specified Wall Thickness, mm				
			3.0	4.0	5.0	6.0	7.0
1500	20N	1.77	180	234	288	342	396
1660	22N	2.16	195	254	313	373	432
1810	24N	2.58	211	275	339	403	467
1970	26N	3.04	232	302	373	443	513
2120	28N	3.54	248	323	398	473	548
2280	30N	4.07	257	335	415	494	572
2430	32N	4.65	272	356	440	524	608
2590	34N	5.26	294	384	474	564	654
2740	36N	5.91	303	396	490	584	678
3050	40N	7.32	346	452	559	665	771
3360	44N	8.89	377	493	609	725	841
3670	48N	10.61	408	534	660	786	911
3990	52N	12.47	445	582	719	856	993
4300	56N	14.49	476	623	770	916	1063
4610	60N	16.66	507	663	820	977	1134
4920	64N	18.99	544	711	880	1047	1215
5230	68N	21.46	575	752	930	1108	1285
5540	72N	24.08	605	793	981	1168	1356
5850	76N	28.86	649	849	1049	1249	1449
6160	80N	29.79	680	889	1100	1309	1519
6470	84N	32.87	711	930	1150	1370	1589
6780	88N	36.10	748	978	1210	1440	1671
7090	92N	39.48	779	1019	1260	1501	1741
7400	96N	43.01	809	1060	1311	1561	1812
7710	100N	46.70	846	1108	1370	1631	1893
8020	104N	50.53	877	1149	1421	1692	1963

*Weights based on 3658 mm plate lengths (refer to Table 2.16). Dimensions are to inside of corrugation crests and are subject to manufacturing tolerances.

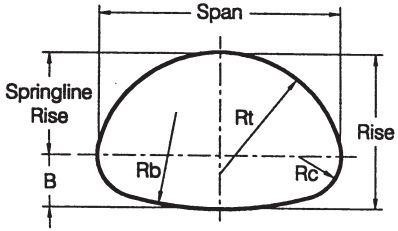

Table 2.19

Structural plate corrugated pipe-arch
152 x 51 mm corrugation profile
Standard dimensions and unit weight of structure (assembled)

Span, mm	Rise, mm	End Area, m^2	Layout Dimensions* (to neutral axis), mm				Required N				Unit Weight of Structure, kg/m, Bolts Included				
											Specified Wall Thickness, mm				
			B	R_t	R_c	R_b	Top	Each Corner	Bottom	Total	3.0	4.0	5.0	6.0	7.0
2060	1520	2.49	700	1130	660	1875	9	5	5	24	210	274	339	403	467
2240	1630	2.90	680	1205	660	3370	11	5	5	26	232	302	373	443	513
2440	1750	3.36	730	1305	685	2995	12	5	6	28	248	323	398	473	548
2590	1880	3.87	735	1355	710	4420	14	5	6	30	263	343	423	503	583
2690	2080	4.49	815	1380	785	4050	16	5	6	32	285	371	458	544	630
3100	1980	4.83	790	1695	685	3850	15	5	9	34	294	384	474	564	654
3400	2010	5.28	840	2000	660	3510	15	5	11	36	316	412	508	604	700
3730	2290	6.61	900	2055	710	4045	18	5	12	40	346	452	559	665	771
3890	2690	8.29	915	1975	815	6015	23	5	11	44	384	501	618	735	852
4370	2870	9.76	1035	2265	815	4895	24	5	14	48	414	541	669	795	922
4720	3070	11.38	1015	2425	815	6430	27	5	15	52	445	582	719	856	993
5050	3330	13.24	1040	2570	840	7430	30	5	16	56	489	638	787	936	1085
5490	3530	15.10	1095	2790	840	7575	32	5	18	60	513	671	829	987	1145
5890	3710	17.07	1150	3020	840	7755	34	5	20	64	557	727	897	1067	1237
6250	3910	19.18	1120	3175	840	9630	37	5	21	68	588	767	948	1128	1308
7040	4060	22.48	1660	4090	1370	9650	31	11	21	74	653	851	1050	1248	1447
7620	4240	25.27	1750	4570	1370	9650	33	11	24	79	679	887	1096	1304	1513

*Refer to diagram above this table.

NOTES: Pipe-arch structures generally require more care in design and installation than round structures, particularly in the larger sizes.
All dimensions are inside unless otherwise noted.

Table 2.20

Structural plate corrugated steel arch
152 x 51 mm corrugation profile
Standard dimensions and unit weight of structure

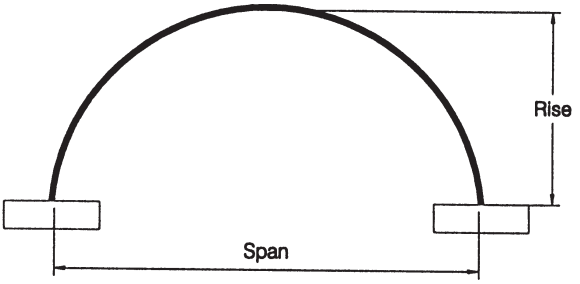

Span, mm	Rise, mm	Total Periphery (Hole Spaces), N	End Area*, m^2	Radius, mm	Unit Weight of Structure, kg/m Bolts Included — Specified Wall Thickness, mm				
					3.0	4.0	5.0	6.0	7.0
1520	810	10N	0.98	760	87	114	141	168	195
1830	840	11N	1.16	930	95	124	154	183	213
	970	12N	1.39	910	102	134	166	198	230
2130	860	12N	1.39	1090	102	134	166	198	230
	1120	14N	1.86	1070	118	155	192	229	266
2440	1020	14N	1.86	1230	118	155	192	229	266
	1270	16N	2.42	1220	139	183	226	269	312
2740	1180	16N	2.46	1400	139	183	226	269	312
	1440	18N	3.07	1370	148	195	242	289	336
3050	1350	18N	3.16	1540	148	195	242	289	336
	1600	20N	3.81	1520	170	223	276	329	382
3350	1360	19N	3.44	1710	163	213	264	314	365
	1750	22N	4.65	1680	192	251	310	370	429
3660	1520	21N	4.18	1850	178	233	289	344	400
	1910	24N	5.48	1830	201	264	327	390	453
3960	1680	23N	5.02	2010	203	264	326	388	449
	2060	26N	6.50	1980	223	292	361	430	499
4270	1840	25N	5.95	2160	215	282	348	415	481
	2210	28N	7.43	2130	238	312	386	460	534
4570	1870	26N	6.41	2340	223	292	361	430	499
	2360	30N	8.55	2290	254	332	412	491	569
4880	2030	28N	7.43	2480	238	312	386	460	534
	2520	32N	9.75	2440	269	353	437	521	605
5180	2180	30N	8.55	2620	254	332	412	491	569
	2690	34N	11.06	2590	291	381	471	561	654
5490	2210	31N	9.01	2820	268	350	433	516	598
	2720	35N	11.71	2740	299	391	484	576	669
5790	2360	33N	10.22	2950	277	363	450	536	622
	2880	37N	13.01	2900	314	411	509	606	704
6100	2530	35N	11.52	3100	299	391	484	576	669
	3050	39N	14.59	3050	329	432	534	637	739

*End area under soffit above the top of footing.
Notes: Other sizes and plate configurations are available. All dimensions are inside.

Table 2.21

Structural plate corrugated horizontal ellipse
152 x 51 mm corrugation profile
Sizes and layout details

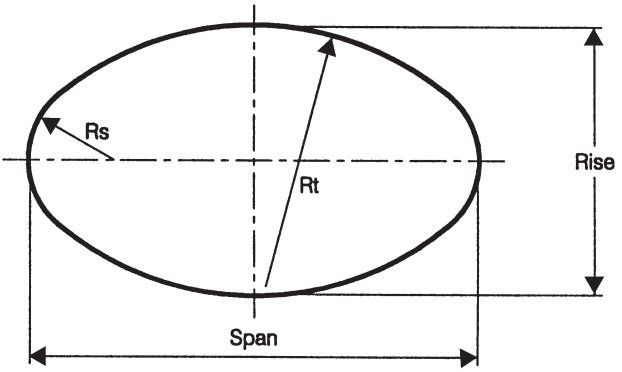

Span, mm	Rise, mm	End Area, m^2	Required N			R_t Top, mm	R_s Side, mm
			Top or Bottom	Each Side	Total		
1630	1350	1.74	5	5	20	970	610
2130	1420	2.41	6	6	24	1710	610
2540	1630	3.24	9	5	28	1770	610
2790	1630	3.57	9	6	30	2340	640
2900	1930	4.36	11	5	32	1850	690
3200	2260	5.64	12	6	36	1990	840
3760	2260	6.62	14	6	40	2630	760
3680	2440	6.85	15	5	40	2260	760
4420	2790	9.78	15	9	48	3200	1070
4826	3429	12.86	18	9	54	2972	1283
5156	3683	14.87	18	11	58	3289	1448
5283	3531	14.59	18	11	58	3607	1359
5715	3988	18.08	18	14	64	3924	1664
6120	3960	18.77	23	10	66	3985	1370
6230	3840	18.40	24	9	66	4165	1220
6460	3910	19.42	25	9	68	4345	1220
6680	3990	20.49	26	9	70	4520	1245
7010	4290	23.15	27	10	74	4700	1370
7470	4470	25.49	29	10	78	5030	1370
7950	5540	34.25	29	15	88	5030	2085
8280	5820	37.59	30	16	92	5025	2210
8560	5210	34.28	33	12	90	5740	1650
8970	6070	42.23	33	16	98	5740	2210
9220	5460	38.55	36	12	96	6275	1650
10110	6120	47.57	39	14	106	6780	1930
10640	6500	53.29	41	15	112	7135	2085
10970	6810	57.51	42	16	116	7315	2210
11250	7800	68.25	41	21	124	7135	2920
11580	8100	72.93	42	22	128	7315	3050
11790	8510	78.31	42	24	132	7315	3325

NOTES: Other sizes and plate configurations are available. All dimensions are inside.

Table 2.22

Structural plate corrugated low profile arch
152 x 51 mm corrugation profile
Sizes and layout details

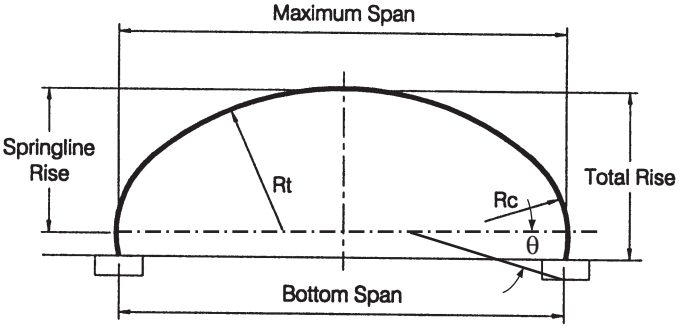

Max. Span, mm	Bottom Span, mm	Total Rise, mm	End Area, m^2	Required N			R_t Top, mm	R_c Side, mm	Springline Rise, mm	Re-Entry Angle, θ, Degrees
				Top	Each Side	Total				
5920	5820	2080	9.75	23	5	33	3990	1090	1780	15.6
6120	6050	2290	11.18	23	6	35	3990	1370	1980	12.4
6550	6500	2360	12.39	25	6	37	4345	1370	2055	12.4
6780	6730	2410	13.01	26	6	38	4520	1370	2110	12.4
7010	6930	2440	13.64	27	6	39	4700	1370	2160	12.4
7240	7160	2490	14.29	28	6	40	4875	1370	2185	12.4
7470	7390	2540	14.94	29	6	41	5030	1370	2235	12.4
7670	7620	2570	15.62	30	6	42	5205	1370	2260	12.4
7900	7850	2620	16.30	31	6	43	5385	1370	2310	12.4
8310	8150	3280	22.04	31	9	49	5385	1930	2745	16.1
8760	8610	3350	23.74	33	9	51	5740	1930	2820	16.1
9420	9270	3480	26.39	36	9	54	6275	1930	2945	16.1
9630	9500	3680	28.69	36	10	56	6275	2210	3150	14.0
9860	9730	3730	29.64	37	10	57	6425	2210	3200	14.0
10080	9930	3780	30.61	38	10	58	6605	2210	3250	14.0
10110	9960	3610	29.15	39	9	57	6780	1930	3075	16.1
10490	10390	4040	34.09	39	11	61	6780	2490	3505	12.5
10540	10410	3680	31.06	41	9	59	7135	1930	3150	16.1
10770	10570	3730	32.03	42	9	60	7315	1930	3200	16.1
11560	11460	4780	44.30	41	14	69	7135	3325	4215	9.4
11790	11680	4800	45.51	42	14	70	7315	3325	4260	9.4

NOTES: Other sizes and plate configurations are available. All dimensions are inside.

Low profile arch with concrete and bin-type retaining wall end treatment.

Long-span high profile arch with concrete and bin-type retaining wall headwall.

Table 2.23

Structural plate corrugated high profile arch
152 x 51 mm corrugation profile
Sizes and layout details

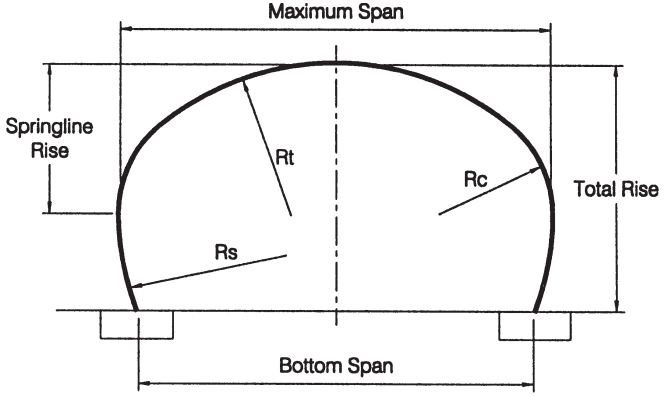

Maximum Span, mm	Bottom Span, mm	Total Rise, mm	End Area, m^2	Required N				R_t Top, mm	R_c Upper Side, mm	R_s Lower Side, mm	Springline Rise, mm
				Top	Each Upper Side	Each Lower Side	Total				
6300	5740	3680	19.85	23	6	6	47	3990	1650	3985	2200
6550	6050	3560	19.93	25	5	6	47	4345	1370	4345	2070
6780	6270	3610	20.85	26	5	6	48	4520	1370	4520	2110
7010	6530	3660	21.78	27	5	6	49	4700	1370	4700	2150
7240	6760	3680	22.71	28	5	6	50	4875	1370	4875	2190
7670	7230	3740	24.61	30	5	6	52	5205	1370	5205	2270
7870	6920	4655	31.56	30	6	9	60	5205	1650	5205	2490
8100	7190	4650	32.78	31	6	9	61	5385	1650	5385	2520
8560	7500	5020	36.92	33	6	10	65	5740	1650	5740	2610
8590	7750	4630	34.09	34	5	9	62	5920	1370	5920	2440
9220	8420	4920	39.00	36	6	9	66	6275	1650	6275	2730
9450	8670	4970	40.25	37	6	9	67	6425	1650	6425	2770
9680	8740	5260	43.55	38	6	10	70	6605	1650	6605	2810
9910	8990	5280	44.91	39	6	10	71	6780	1650	6780	2850
10360	9500	5380	47.67	41	6	10	73	7135	1650	7135	2930
10360	9140	5830	51.86	41	6	12	77	7135	1650	7135	2930
10570	9730	5440	49.07	42	6	10	74	7315	1650	7315	2980
10590	9390	5870	53.39	42	6	12	78	7315	1650	7315	2980
11350	10130	6910	67.08	41	11	12	87	7135	3050	7135	4000
11580	10390	6930	68.86	42	11	12	88	7315	3050	7315	4000

NOTES: Other sizes and plate configurations are available. All dimensions are inside.

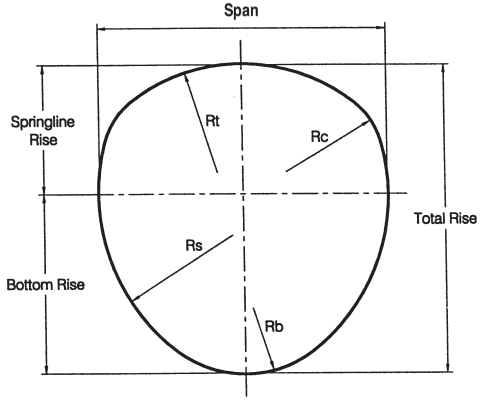

Table 2.24 Structural plate corrugated pear shape
152 x 51 mm corrugation profile
Sizes and layout details

Span, mm	Total Rise, mm	Bottom Rise, mm	End Area, m^2	Required N					R_b Bottom, mm	R_s Side, mm	R_c Corner, mm	R_t Top, mm
				Top	Each Corner	Each Side	Bottom	Total				
*7210	7820	4550	44.69	25	5	24	15	98	2720	5055	1905	4470
7570	8430	5100	50.54	27	5	25	18	105	2820	5995	1755	4850
8360	8230	5510	53.70	30	6	26	16	110	2920	6200	1395	6070
**8100	8610	5460	54.91	28	5	30	12	110	2440	6095	1475	6275
8560	8480	5130	57.97	27	8	22	25	112	3710	5790	2210	6225
***7320	8530	4880	48.87	27	5	24	18	103	2770	5790	2440	3960

*Meets AREMA clearance for bridges & tunnels.
**Meets AREMA clearance for single track tunnel.
***Meets AREMA CP Rail Clearance for single track tunnel.
NOTES: Other sizes and plate configurations are available. All dimensions are inside.

Table 2.25

Structural plate corrugated pedestrian and cattle underpass
152 x 51 mm corrugation profile
Sizes and layout details

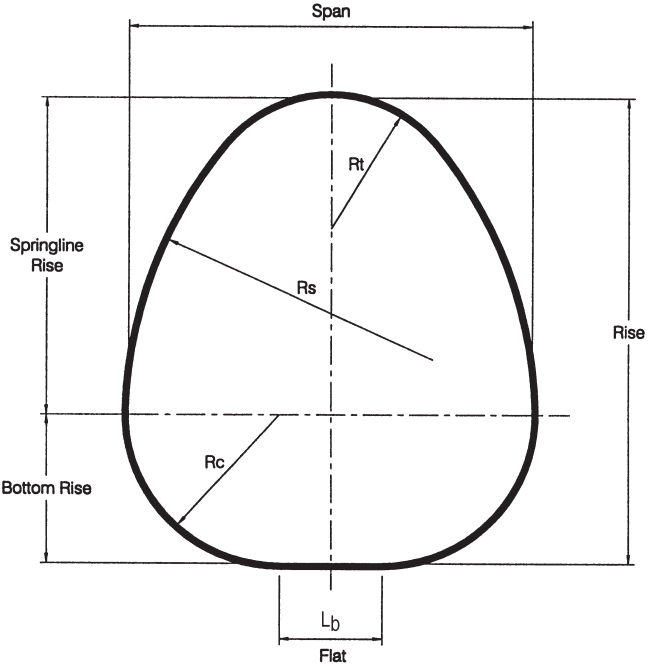

			Periphery , N								
Span, mm	Rise, mm	Bottom Rise, mm	Total N	Top	Each Side	Bottom	Each Corner	R_t mm	R_s mm	R_c mm	L_b mm
1755	1995	700	26	7	5	3	3	750	1980	485	730
1780	2250	790	28	7	6	3	3	725	2490	490	730
1780	2360	825	29	8	6	3	3	760	3125	485	730
1790	2490	900	30	7	7	3	3	710	2920	495	730

NOTES: Other sizes and plate configurations are available. All dimensions are inside.

Table 2.26

Structural plate corrugated steel pipe
5% vertically ellipsed
152 x 51 mm corrugation profile
Sizes and layout details

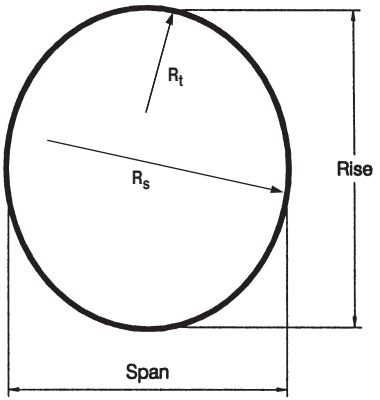

Span, mm	Rise, mm	End Area, m^2	Required N			Unit Weight of Structure, kg/m Bolts Included					Layout Dimensions	
			Each Side	Top or Bottom	Total	Specified Wall Thickness, mm					R_t	R_s
						3.0	4.0	5.0	6.0	7.0		
2310	2570	4.63	10	6	32	285	371	458	544	630	1045	1350
2460	2740	5.24	11	6	34	300	391	483	574	665	1100	1430
2620	2900	5.89	9	9	36	303	396	490	584	678	1220	1565
2920	3230	7.30	14	6	40	346	452	559	665	771	1265	1675
3200	3560	8.86	16	6	44	390	508	627	745	863	1370	1840
3580	3890	10.57	18	6	48	408	534	660	786	911	1470	2005
3810	4220	12.42	17	9	52	452	590	728	866	1004	1690	2200
4140	4570	14.41	19	9	56	482	630	779	926	1074	1800	2360
4340	4830	16.60	12	18	60	513	671	829	987	1145	2090	2720
4650	5160	18.92	14	18	64	544	711	880	1047	1215	2220	2855
4950	5460	21.38	14	20	68	588	767	948	1128	1308	2370	3065
5260	5820	23.99	18	18	72	605	793	981	1168	1356	2470	3150
5540	6120	26.75	18	20	76	649	849	1049	1249	1449	2620	3355
5840	6450	29.67	19	21	80	693	905	1117	1329	1541	2760	3530
6120	6780	32.74	21	21	84	724	945	1168	1390	1612	2885	3680

NOTES: The vertically ellipsed shape may be suited for high fills, or other site conditions. Other sizes and plate configurations are available. All dimensions are inside.

Bolts and Nuts

Galvanized 19 mm diameter bolts of special heat-treated steel meeting ASTM Specification A 449 or ASTM Specification F568 Class 8.8, are used to assemble structural plate sections. Galvanized nuts meet the requirements of ASTM A 563 Grade 12. The galvanizing on bolts and nuts must meet ASTM Specification A 153, CSA-G164 Class 5 or ASTM B 695 Class 50 Type II. See Figure 2.8 for dimensions of bolts and nuts. Lengths include: 32, 38, 44, 51 and 76 mm. The containers and bolts are colour coded for ease in identification as shown in Table 2.27.These are designed for fitting either the crest or valley of the corrugations, and to give maximum bearing area and tight seams without the use of washers. Power wrenches are generally used for bolt tightening, but simple hand wrenches are satisfactory for small structures.

Anchor bolts are available for anchoring the sides of structural plate arches into footings, and the ends of structural plate conduits into concrete end treatments (Figures 2.9 and 2.10). Material for these special 19 mm bolts must conform to ASTM Specification A 307, and nuts to ASTM A 563 Grade C. Galvanizing of anchor bolts and nuts must conform to ASTM A 153.

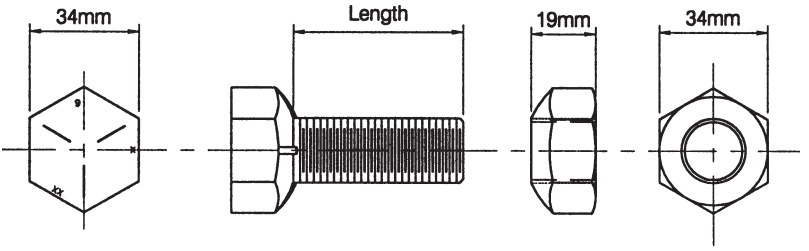

Figure 2.8: Dimensions of bolts and nuts for structural plate.

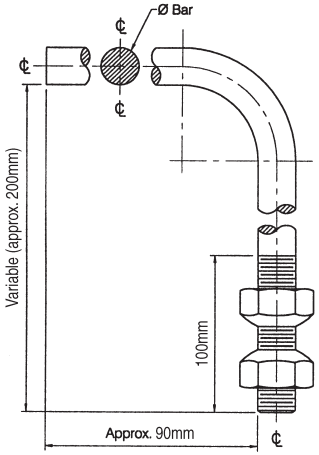

Figure 2.9: Hook bolts and nuts for embedment in headwalls.

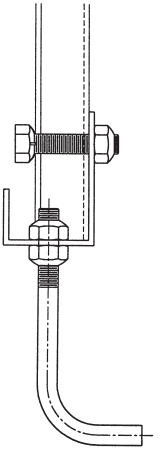

Figure 2.10: Hook bolt and base channel.

Table 2.27 Bolt and container colour coding

Bolt Length, mm	Colour	
	Bolt	Container
32	None	White
38	Green	Green
44	Red	Red
51	Black	Black
76	None	Yellow
Nuts	None	Blue

Arch Channels

For arch seats, galvanized unbalanced channels are available for anchoring the arch to concrete footings. The unbalanced channel is anchored to the footing either by anchor bolts or by integral lugs that are bent and twisted as shown in Figure 2.11.

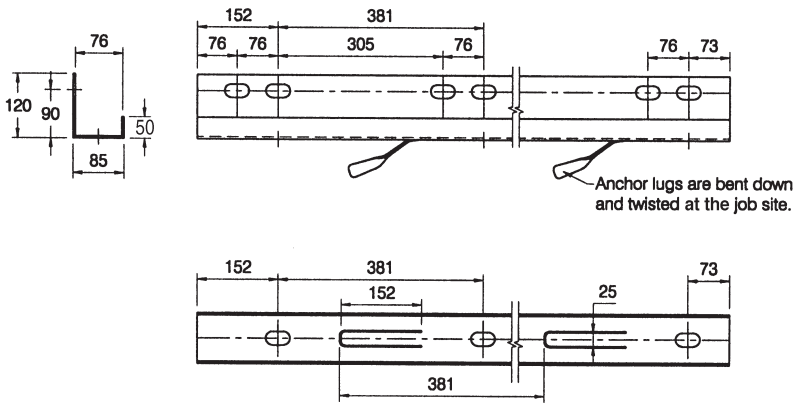

Figure 2.11: General dimensions of unbalanced channels for structural plate arches.

2. DEEP CORRUGATED STRUCTURAL PLATE

Deep corrugated structural plate is also a bolted structure. It has either a 381 x 140 mm corrugation (DCSP Type I) or a 400 x 150 mm corrugation (DCSP Type II).

As with structural plate, the corrugations are at right angles to the length of the plate. The length of a plate is measured in a direction parallel to the length of the structure. The width of a plate is, therefore, measured in a direction that is perpendicular to the length of the structure, around the periphery of the structure.

DEEP CORRUGATED STRUCTURAL PLATE TYPE I

Product Description

Deep corrugated structural plate pipe Type I has a 381 x 140 mm corrugation, which is shown in Figure 2.1.

Standard plates are fabricated in one length and several widths, as shown in Table 2.28 and Figure 2.12. The coverage length (excluding the side lips) is 762 mm.The plate width designation, S, is used to describe the various plate widths available. S is the distance between circumferential bolt holes, or one circumferential bolt hole space (circumferential refers to the direction around the periphery of the structure, at right angles to the length of the structure). For instance, a 5 S plate has a net width of 5 circumferential bolt hole spaces (see Figure 2.12). The bolt hole space, S, is 406.4 mm (406 mm nominal).

Plates are furnished curved to various radii and are clearly identified by the fabricator for field erection. The plates are available in 2.8 to 7.1 mm thicknesses. Weights of individual plate sections are shown in Table 2.29.

Section Properties

Section properties, used for design, are provided in Table 2.30. Properties of the arc-and-tangent corrugation are derived mathematically using the design thickness. The properties in the table include area, moment of inertia, section modulus and radius of gyration.

Sizes and Shapes

The plates are assembled into various shapes as indicated in Tables 2.31 through 2.34. The shapes include round, single radius arch, multi-radius arch, and box culvert. Special shapes, and other standard shape sizes not shown in the tables, are also available. Detailed assembly instructions accompany each structure.

Table 2.28 Deep corrugated structural plate sections
Type I: **381 x 140 mm** corrugation profile
Details of uncurved plates

Nominal Plate Width Designation, S	Net Width, mm	Overall Width, mm	No. of Circumferential Bolt Holes
1S	406.4	634.4	2
2S	812.8	1040.8	3
3S	1219.2	1447.2	4
4S	1625.6	1853.6	5
5S	2032.0	2260.0	6
6S	2438.4	2666.4	7
7S	2844.8	3072.8	8
8S	3251.2	3479.2	9
9S	3657.6	3885.6	10
10S	4064.0	4292.0	11
11S	4470.4	4698.4	12

S = 406 mm Nominal (406.4 mm theoretical)

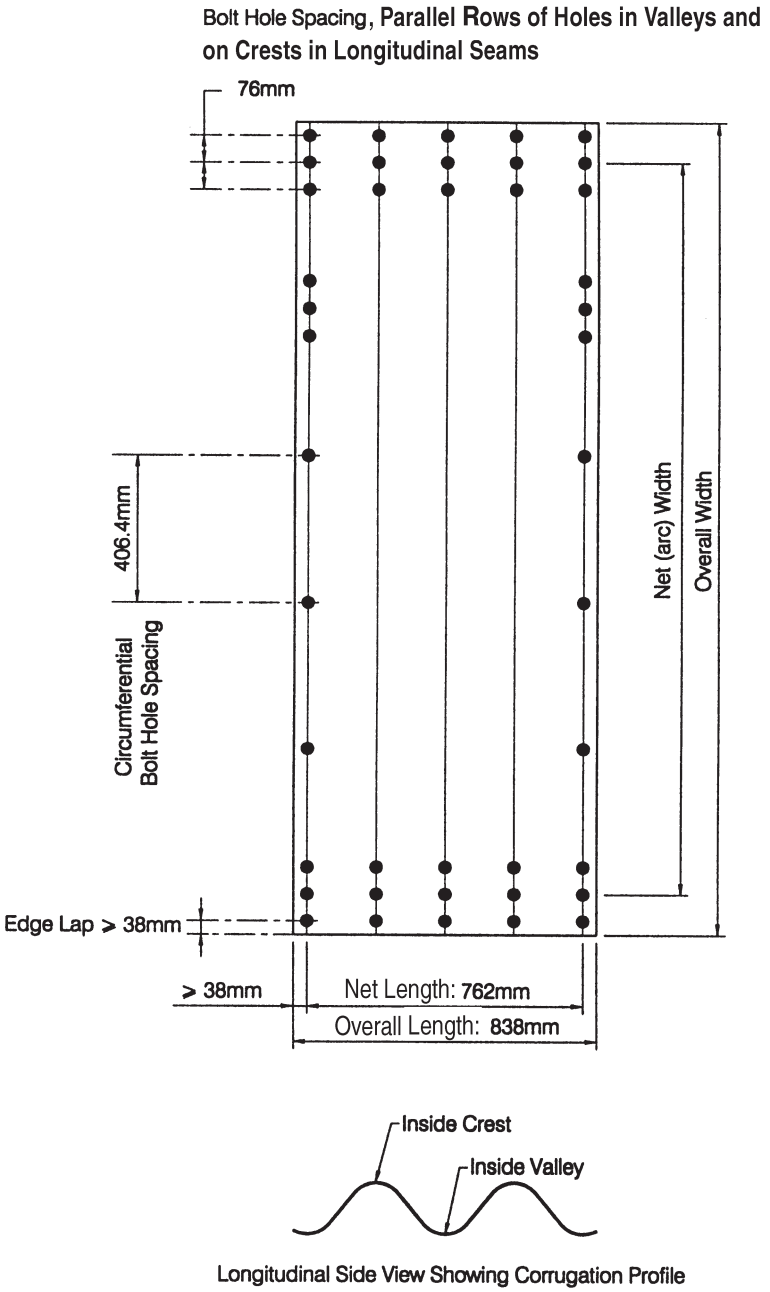

Figure 2.12 Deep Corrugated Structural Plate Type I plate configuration.

Table 2.29

Weight of deep corrugated structural plate sections
Type I: **381 x 140 mm** corrugation profile

Plate Width Designation	Length, mm	Approximate Weight of Galvanized Plates, kg Specified wall thickness							Number of Assembly Bolts/Plate
		2.77	3.50	4.27	4.78	5.54	6.32	7.11	
1S	762	15	20	24	27	32	37	42	14
2S	762	25	33	40	44	53	60	68	15
3S	762	35	46	55	62	73	83	94	16
4S	762	45	59	71	79	94	107	121	17
5S	762	55	72	86	96	114	130	147	18
6S	762	64	85	102	113	134	153	173	19
7S	762	74	98	117	131	155	177	200	20
8S	762	84	111	133	148	175	200	226	21
9S	762	94	124	148	165	196	223	252	22
10S	762	104	137	164	182	216	247	279	23
11S	762	113	150	179	200	236	270	305	24

Notes:
1. Bolt weight not included.
2. Bolt length used for all structures - 51 mm. Bolts are colour coded for the different lengths.
3. Weight of bolts and nuts in kg per hundred:
   51 mm = 27 kg
   76 mm = 32.9 kg
   102 mm = 38.8 kg
4. To compute the approximate weight of structures per meter of structure length: (1) multiply the weight from the table by the number of plates in the periphery; (2) add weight of bolts and nuts; (3) divide by plate length.

Table 2.30

Deep corrugated structural plate section properties
Type I: **381 x 140 mm** corrugation profile

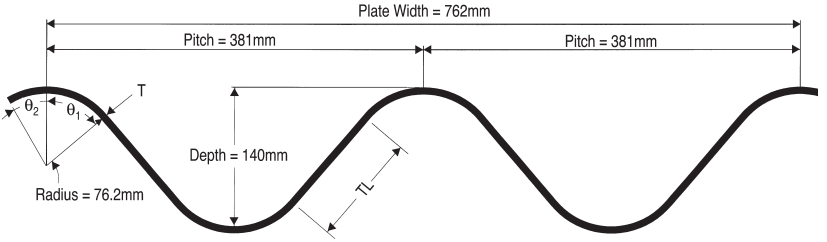

Specified T	Design T	Tangent Length	Tangent Angle 1	Tangent Angle 2	Area	Moment Axis of Inertia	Section Modulus	Radius of Gyration	Plastic Section Modulus	Developed Width Factor
		TL	θ_1	θ_2	A	I	S	r	Z	WF
mm	mm	mm	degrees	degrees	mm^2/mm	mm^4/mm	mm^3/mm	mm	mm^3/mm	*
2.81	2.66	111.74	49.61	30.59	3.72	9096.19	119.19	49.45	165.25	1.28
3.53	3.42	110.78	49.75	30.33	4.78	11710.74	152.72	49.48	212.67	1.28
4.27	4.18	109.81	49.89	30.06	5.85	14333.90	186.04	49.52	260.16	1.28
4.79	4.67	109.18	49.99	29.89	6.54	16038.98	207.54	49.54	291.03	1.28
5.54	5.45	108.18	50.13	29.62	7.63	18743.25	241.38	49.57	339.93	1.28
6.32	6.23	107.18	50.28	29.36	8.72	21445.89	274.87	49.60	388.77	1.28
7.11	7.01	106.15	50.43	29.09	9.81	24164.64	308.24	49.63	437.86	1.28

* WF is the ratio of the flat sheet width to the corrugated sheet width.

Table 2.31

Deep corrugated structural plate arch
Type I: **381 x 140 mm** corrugation profile
Size and layout details

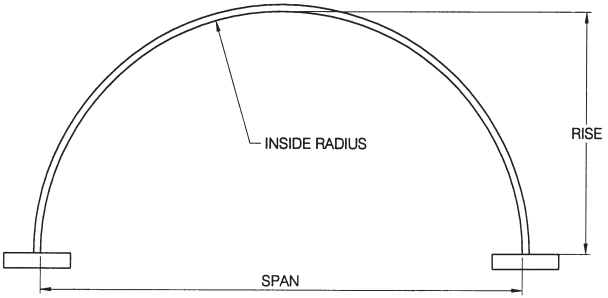

Span, mm	Rise, mm	Periphery (Hole Spaces), S	*End Area, m^2	Radius, mm
6990	3495	27	19.19	3495
7250	3625	28	20.64	3625
7510	3755	29	22.14	3755
7640	3820	30	23.70	3885
8030	4015	31	25.29	4015
8290	4140	32	26.95	4145
8550	4270	33	28.66	4275
8800	4400	34	30.42	4400
9060	4530	35	32.24	4530
9320	4660	36	34.10	4660
9580	4790	37	36.02	4790
9840	4920	38	38.00	4920
10100	5045	39	40.02	5050
10360	5175	40	42.10	5180
10620	5305	41	44.23	5310
10870	5435	42	46.41	5435
11130	5565	43	48.65	5565
11390	5695	44	50.94	5695
11650	5825	45	53.28	5825
11910	5955	46	55.67	5955
12170	6080	47	58.12	6085
12430	6210	48	60.61	6215
12690	6340	49	63.17	6345
12940	6470	50	65.76	6470
13200	6600	51	68.42	6600
13460	6730	52	71.13	6730
13720	6860	53	73.89	6860
13980	6985	54	76.71	6990
14240	7115	55	79.57	7120
14500	7245	56	82.49	7250
14760	7375	57	85.46	7380
15010	7505	58	88.49	7505
15270	7635	59	91.56	7635
15530	7765	60	94.69	7765
15790	7895	61	97.88	7895
16050	8025	62	101.10	8025
16310	8150	63	104.39	8155
16570	8280	64	107.74	8285
16830	8410	65	111.11	8415
17220	8610	66	114.56	8540
17290	8670	67	118.06	8670
17600	8800	68	121.62	8800
17860	8930	69	125.22	8930

*End area under soffit above top of footing.
NOTE: Other arch structures may be designed to suit specific applications and/or sites. All dimensions are inside.

Table 2.32

Multi-radius deep corrugated structural plate arches
Type I: **381 x 140 mm** corrugation profile
Size and layout details

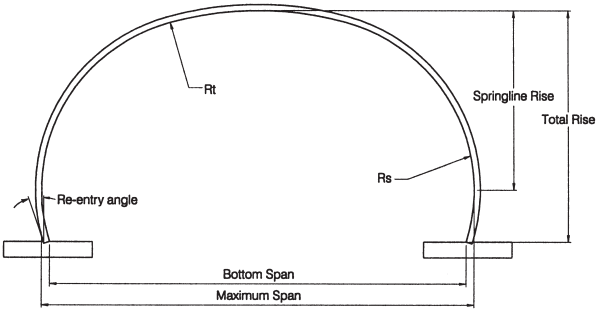

Maximum Span	Bottom Span	Total Rise	Springline Rise	Area	Required 'S'			Top Radius	Side Radius	Re-Entry Angle
					Top	Side (x2)	Total	R_t	R_s	
mm	mm	mm	mm	m^2				mm	mm	degrees
9190	9170	4585	4275	34.11	7.0	14.5	36	5730	4230	4.09
9165	8865	5380	4257	41.10	5.0	17.5	40	6530	4230	15.10
9420	9385	4690	4294	35.94	8.0	14.5	37	6030	4230	5.31
9340	9160	5290	4282	41.35	7.0	16.5	40	6330	4230	13.60
9720	9690	4795	4408	37.85	9.0	14.5	38	6130	4330	5.12
9760	9475	5595	4479	45.48	7.0	17.5	42	6530	4430	14.35
10085	10015	5070	4513	41.84	9.0	15.5	40	6730	4430	7.06
10060	9540	5790	4325	49.28	9.0	17.5	44	7630	4230	19.89
10400	10385	4655	4349	39.66	10.0	14.5	39	8230	4230	4.07
10485	10335	5275	4467	45.92	11.0	15.5	42	7430	4330	10.59
10400	10005	5990	4659	51.99	12.0	16.5	45	6330	4530	16.77
10690	10675	4770	4470	41.72	11.0	14.5	40	8130	4330	3.84
10700	10485	5355	4401	47.94	12.0	15.5	43	7930	4230	12.92
10680	10215	6075	4646	54.20	15.0	15.5	46	6430	4430	18.52
11000	10920	5030	4431	45.86	13.0	14.5	42	8330	4230	8.06
10985	10745	5440	4431	50.01	13.0	15.5	44	8230	4230	13.69
11000	10650	6385	4833	58.86	15.0	16.5	48	6630	4630	19.20
11225	11130	5140	4497	48.04	12.0	15.5	43	9330	4330	8.37
11300	10990	5680	4430	54.41	13.0	16.5	46	9430	4230	16.80
11240	10620	6495	4835	61.12	18.0	15.5	49	6630	4530	21.16
11580	11500	5230	4622	50.28	13.0	15.5	44	9330	4430	7.76
11600	11200	5760	4461	56.69	14.0	16.5	47	9630	4230	17.67
11535	10945	6548	4903	63.75	13.0	18.5	50	7930	4730	20.02
11900	11685	5450	4493	54.58	15.0	15.5	46	9930	4230	12.92
11900	11510	5885	4590	59.22	15.0	16.5	48	9430	4330	17.19
11865	11510	6760	5387	67.06	8.0	21.5	51	8530	5330	14.75
12140	11950	5575	4647	57.05	14.0	16.5	47	10730	4430	11.92
12155	11580	6140	4585	63.72	15.0	17.5	50	10430	4330	20.73
12160	11700	7060	5488	72.06	8.0	22.5	53	9130	5430	16.57
12455	12110	5835	4618	61.65	16.0	16.5	49	10730	4330	16.05
12500	12050	6280	4840	66.73	14.0	18.5	51	10930	4630	17.86
12500	11935	7050	5347	74.57	11.0	21.5	54	9730	5230	18.76
12770	12535	5960	4899	64.53	13.0	18.5	50	12930	4730	12.75
12800	12360	6395	4967	69.48	15.0	18.5	52	10730	4730	17.28
12800	12110	7335	5445	79.79	11.0	22.5	56	10430	5330	20.43
13090	12870	6120	5096	67.30	16.0	17.5	51	10630	4830	19.25
13100	12715	6505	5127	72.33	14.0	19.5	53	11630	4930	11.90
13105	12570	7525	5787	83.20	8.0	24.5	57	11530	5730	16.05
13330	12890	6310	4890	71.90	16.0	18.5	53	12730	4630	17.51
13330	12965	6660	5293	75.21	13.0	20.5	54	12330	5130	17.60
13330	12610	7580	5641	85.62	11.0	23.5	58	11130	5530	15.26
13640	13020	6320	4711	73.90	19.0	17.5	54	12630	4330	20.31
13625	13370	6855	5662	78.49	12.0	21.5	55	11830	5530	21.51
13705	13270	7805	6183	89.69	8.0	25.5	59	11130	6130	12.30
13950	13505	6490	5055	77.39	18.0	18.5	55	12630	4730	15.14
13940	13410	7015	5377	83.33	16.0	20.5	57	12130	5130	17.61
14100	13550	8030	5213	95.54	10.0	25.5	61	11430	6130	18.32
14205	13755	6660	5193	80.34	19.0	18.5	56	12030	4830	16.95
14267	13755	7125	5506	86.37	17.0	20.5	58	11930	5230	17.79

continued on next page

Table 2.32

Multi-radius deep corrugated structural plate arches
Type I: **381 x 140 mm** corrugation profile
Size and layout details (*continued)*

Maximum Span	Bottom Span	Total Rise	Springline Rise	Area	Required 'S'			Top Radius	Side Radius	Re-Entrant Angle
					Top	Side (x2)	Total	R_t	R_s	
mm	mm	mm	mm	m^2				mm	mm	degrees
14300	13815	8250	6492	98.90	9.0	26.5	62	10730	6430	15.64
14540	14185	6780	5438	83.60	18.0	19.5	57	12730	5130	14.95
14560	14140	7280	6346	89.77	16.0	21.5	59	12230	5530	15.71
14575	13975	8260	5763	101.68	12.0	25.5	63	11130	6230	17.76
14808	14361	6938	5463	86.41	23.0	17.5	58	10930	4930	17.15
14840	14495	7490	6080	93.26	17.0	21.5	60	11030	5830	13.79
14860	14085	8555	6386	107.66	14.0	25.5	65	10930	6230	20.10
15155	14915	7085	5919	90.14	18.0	20.5	59	12330	5630	11.79
15205	14885	7580	6205	96.49	18.0	21.5	61	11130	5930	13.24
15110	14330	8690	6504	111.12	15.0	25.5	66	10730	6330	19.97

Other sizes and plate configurations are available. All dimensions are inside.

Table 2.33

Deep corrugated structural plate round pipe
Type I: **381 x 140 mm** corrugation profile

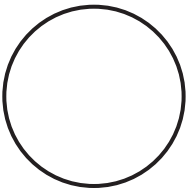

Diameter (mm)	End Area (m^2)	Total S
8450	57.2	66
8790	60.7	68
9040	64.2	70
9320	68.3	72
9580	72.0	74
9830	75.9	76
10080	79.9	78
10340	84.0	80
10620	88.5	82
10870	92.8	84
11130	97.2	86
11380	101.7	88
11630	106.3	90
12170	116.3	94
12680	126.3	98
13180	136.5	102
13720	147.8	106
14220	158.9	110
14760	171.1	114
15270	183.0	118
15770	195.4	122

Other sizes and plate configurations are available. All dimensions are inside.

Corrugated Steel Box Culverts

Corrugated steel box culverts approach the rectangular shape of a low, wide box. This is made possible by the addition of special rib plates (where required) to the standard deep corrugated structural plate sheets (see Figure 2.13). The resulting combined section develops the flexural capacity required for the very flat top and sharp corners.

The foundation for box culverts can be designed as a conventional concrete footing, steel footer pads (as shown in Figure 2.14), or a full steel invert.

Corrugated steel box culverts can be designed for low, wide waterway requirements with heights of cover between 450 mm and 1500 mm (measured from the outside crest of the main barrel) and various loading situations.

Box culverts are available in standard spans of 3.170 m to 12.315 m and rises of 1.180 m to 3.555 m. Table 2.34 provides representative sizes available. Special sizes are available by contacting the local manufacturer.

Table 2.34 Deep corrugated structural plate box culverts
Type I: **381 x 140 mm** corrugation profile
Size and layout details

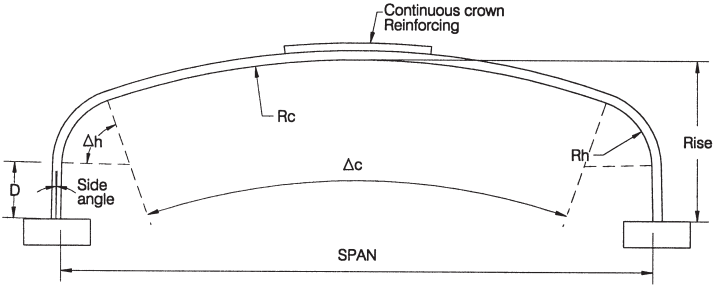

Span	Rise	End Area	Crown Angle	Haunch Angle	Crown Radius	Haunch Radius	Side Length	Side Angle
			Δ c	Δ h	R_c	R_h	D	
mm	mm	m^2	degrees	degrees	mm	mm	mm	degrees
3170	1180	3.12	7.35	72.36	8820	1016	407	14.00
3550	1420	4.33	9.97	75.04	8820	1016	559	10.00
3840	1465	4.94	12.59	77.72	8820	1016	509	6.31
3965	2210	7.35	9.97	72.36	8820	1016	1423	12.98
3865	1260	4.18	12.59	72.36	8820	1016	407	10.36
4105	1860	6.56	12.59	72.36	8820	1016	1017	11.67
4210	1310	4.76	15.21	72.36	8820	1016	407	9.05
4735	1960	8.16	17.83	72.36	8820	1016	1017	9.05
4550	1360	5.36	17.83	72.36	8820	1016	407	7.74
4890	1610	6.97	20.45	75.02	8820	1016	559	5.06
4860	2365	10.09	17.83	72.36	8820	1016	1423	9.05
5155	2420	11.06	20.45	72.36	8820	1016	1423	7.74
5215	1670	7.72	23.07	75.02	8820	1016	559	3.75
5360	2075	9.89	23.07	72.36	8820	1016	1017	6.43
5320	1440	6.62	23.57	69.69	8820	1016	419	8.53
5445	2480	12.07	23.07	72.36	8820	1016	1423	6.43
5655	1505	7.33	26.19	69.69	8820	1016	419	7.22
5955	2645	14.23	27.66	72.36	8820	1016	1473	3.81
6130	1495	7.83	30.28	72.36	8820	1016	254	2.50
6165	1900	10.33	30.28	72.36	8820	1016	660	2.50
6235	2715	15.36	30.28	72.36	8820	1016	1473	2.50
6320	1645	8.91	31.43	69.69	8820	1016	419	4.60
6480	1975	11.25	32.90	72.36	8820	1016	660	1.19
6495	2380	13.89	32.90	72.36	8820	1016	1067	1.19

continued on following page...

Table 2.34

Deep corrugated structural plate box culverts
Type I: **381 x 140 mm** corrugation profile
Size and layout details (continued)

Span	Rise	End Area	Crown Angle Δc	Haunch Angle Δh	Crown Radius R_c	Haunch Radius R_h	Side Length D	Side Angle
mm	mm	m^2	degrees	degrees	mm	mm	mm	degrees
6645	1720	9.77	34.05	69.69	8820	1016	419	3.29
6970	1795	10.67	36.67	69.69	8820	1016	419	1.98
7000	2200	13.50	36.67	69.69	8820	1016	825	1.98
7025	2610	16.35	36.67	69.69	8820	1016	1232	1.98
7290	1875	11.62	39.29	69.69	8820	1016	419	0.67
7300	2285	14.58	39.29	69.69	8820	1016	825	0.67
7310	2690	17.56	39.29	69.69	8820	1016	1232	0.67
7315	3095	20.52	39.29	69.69	8820	1016	1638	0.67
7405	1680	10.21	39.29	58.98	8820	1016	419	11.38
7800	1965	12.71	41.91	58.98	8820	1016	622	10.07
7945	2370	15.87	41.91	58.98	8820	1016	1029	10.07
8575	1920	13.90	36.45	69.69	11430	1016	419	2.09
8605	2325	17.38	36.45	69.69	11430	1016	825	2.09
8635	2735	20.89	36.45	69.69	11430	1016	1232	2.09
9145	1940	14.64	39.48	64.32	11430	1016	419	5.94
9225	2345	18.35	39.48	64.32	11430	1016	825	5.94
9310	2750	22.10	39.48	64.32	11430	1016	1232	5.94
9810	2105	16.92	43.53	64.32	11430	1016	419	3.92
9865	2510	20.90	43.53	64.32	11430	1016	825	3.92
9920	2920	24.92	43.53	64.32	11430	1016	1232	3.92
10460	2285	19.43	47.58	64.32	11430	1016	419	1.89
10485	2690	23.68	47.58	64.32	11430	1016	825	1.89
10515	3100	27.95	47.58	64.32	11430	1016	1232	1.89
10895	2355	20.59	50.09	61.64	11430	1016	419	3.32
10940	2760	25.02	50.09	61.64	11430	1016	825	3.32
10990	3165	29.47	50.09	61.64	11430	1016	1232	3.32
11645	2530	23.31	54.67	58.96	11430	1016	419	3.71
11700	2935	28.04	54.67	58.96	11430	1016	825	3.71
11750	3345	32.81	54.67	58.96	11430	1016	1232	3.71
12270	2745	26.46	58.72	58.96	11430	1016	419	1.68
12290	3150	31.45	58.72	58.96	11430	1016	825	1.68
12315	3555	36.45	58.72	58.96	11430	1016	1232	1.68

Other sizes and plate configurations are available. All dimensions are inside.

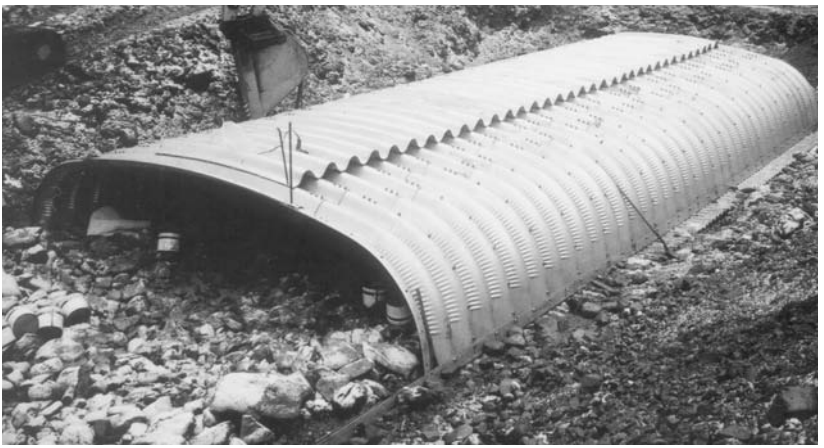

Installation of a Type I deep corrugated structural plate box culvert.

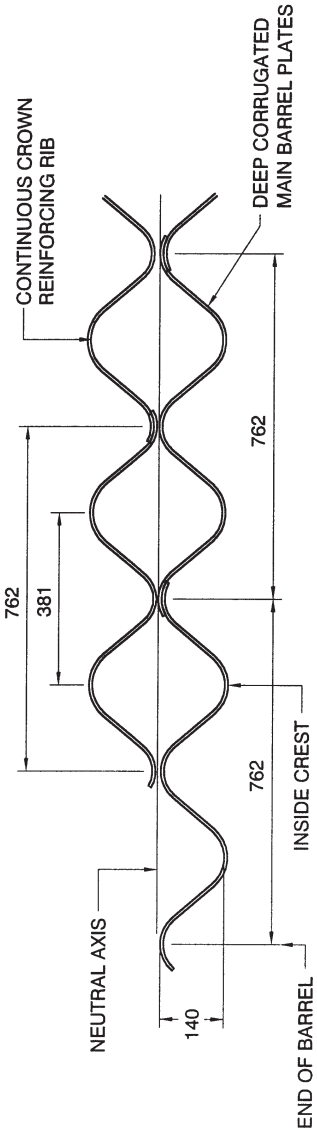

Figure 2.13 Reinforcing rib for deep corrugated structural plate Type I.

NOTE:

1) FOOTING ELEVATION MUST PROVIDE ADEQUATE FROST & SCOUR PROTECTION AS DETERMINED BY OWNER'S GEOTECHNICAL ENGINEER.

2) FOOTING DESIGN (WIDTH & THICKNESS) BASED ON SPECIFIED MINIMUM ALLOWABLE SOIL BEARING CAPACITY.

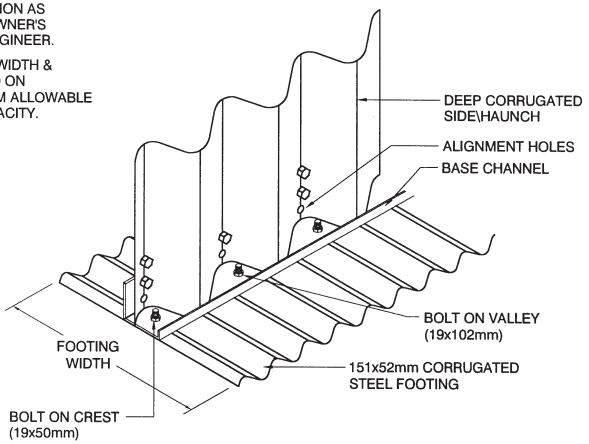

Detail - Typical Steel Footer

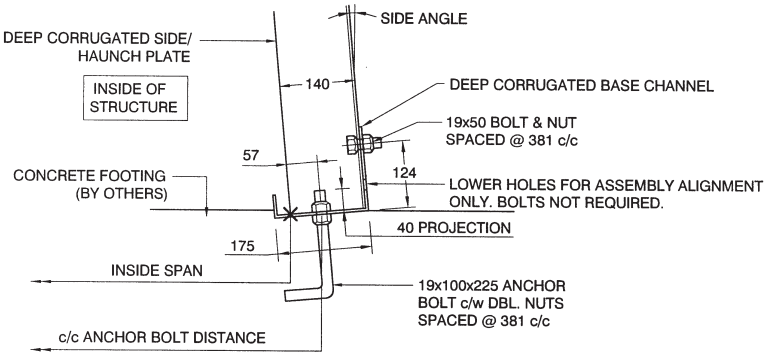

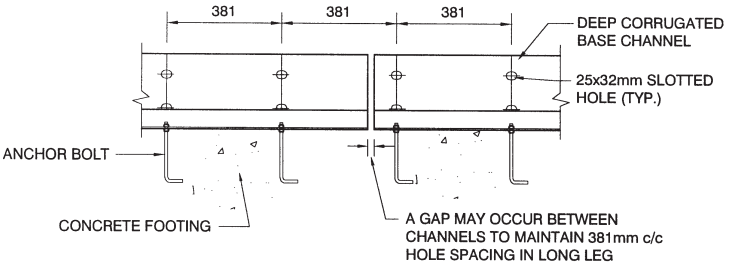

Details - Base Channel

Figure 2.14 Additional details for deep corrugated structural plate Type I.

Deep corrugated structural plate box culvert assembled at job site.

Deep corrugated structural plate box culvert on foundation with end walls attached.

DEEP CORRUGATED STRUCTURAL PLATE TYPE II

Product Description

Deep corrugated structural plate Type II has a 400 x 150 mm corrugation, which is shown in Figure 2.1.

Standard plates are fabricated in one length and several widths, as shown in Table 2.35 and Figure 2.15. The coverage length (excluding the side lips) is 1200 mm. The plate width designation, H, is used to describe the various plate widths available. H is the distance between circumferential bolt holes, or one circumferential bolt hole space (circumferential refers to the direction around the periphery of the structure, at right angles to the length of the structure). For instance, a 9 H plate has a net width of 9 circumferential bolt hole spaces (see Figure 2.15). The bolt hole space, H, is 425 mm.

Plates are furnished curved to various radii and are identified with a permanent mark which shows information such as the plate geometry. This marking is provided to simplify field erection and to make identification of the structure details, in the

future, as easy as possible. The plates are available in thickness' ranging from 3 to 7 mm. Weights of individual plate sections are shown in Table 2.36.

Section Properties

Section properties, used for design, are provided in Table 2.37. Properties of the arc-and-tangent corrugation are derived mathematically using the design thickness. The properties in the table include area, moment of inertia, section modulus and radius of gyration.

Sizes and Shapes

The plates are assembled into various shapes as the single radius arch shapes shown in Table 2.38. Round, two radius arches, special shapes, and other single radius arch sizes are also available. Detailed assembly instructions accompany each structure.

Table 2.35

Deep corrugated structural plate sections
Type II: **400 x 150 mm** corrugation profile
Details of uncurved plates

Plate Width Designation	Net Width, mm	Overall Width, mm
3H	1275	1555
4H	1700	1980
5H	2125	2405
6H	2550	2830
7H	2975	3255
8H	3400	3680
9H	3825	4105

H = 425 mm

Table 2.36

Weight of deep corrugated structural plate sections
Type II: **400 x 150 mm** corrugation profile

Plate Width Designation	Approximate Weight of Galvanized Plates, kg* Specified Wall Thickness, mm					Number of Assembly Bolts/Plate
	3.0	4.0	5.0	6.0	7.0	
3H	57.2	78.4	99.8	121.0	141.2	22
4H	72.8	99.8	127.0	154.1	179.8	23
5H	88.5	121.2	154.3	187.1	218.4	24
6H	104.1	142.7	181.6	220.2	257.0	25
7H	119.7	164.1	208.8	253.3	295.6	26
8H	135.4	185.5	236.1	286.3	334.2	27
9H	151.0	206.9	263.4	319.4	372.8	28

Notes
1. Weight of bolts not included.
2. Bolt length used for all structures = 51 mm
3. Weight of bolts and nuts in kg per hundred = 27.0 kg
4. To compute the approximate weight of structures per metre of structure length: (1) multiply the weight from the table by the number of plates in the periphery having that plate designation (2) multiply the number of bolts from the table by the number of plates in the periphery having that plate designation (3) add the two numbers together (4) divide by 1.2

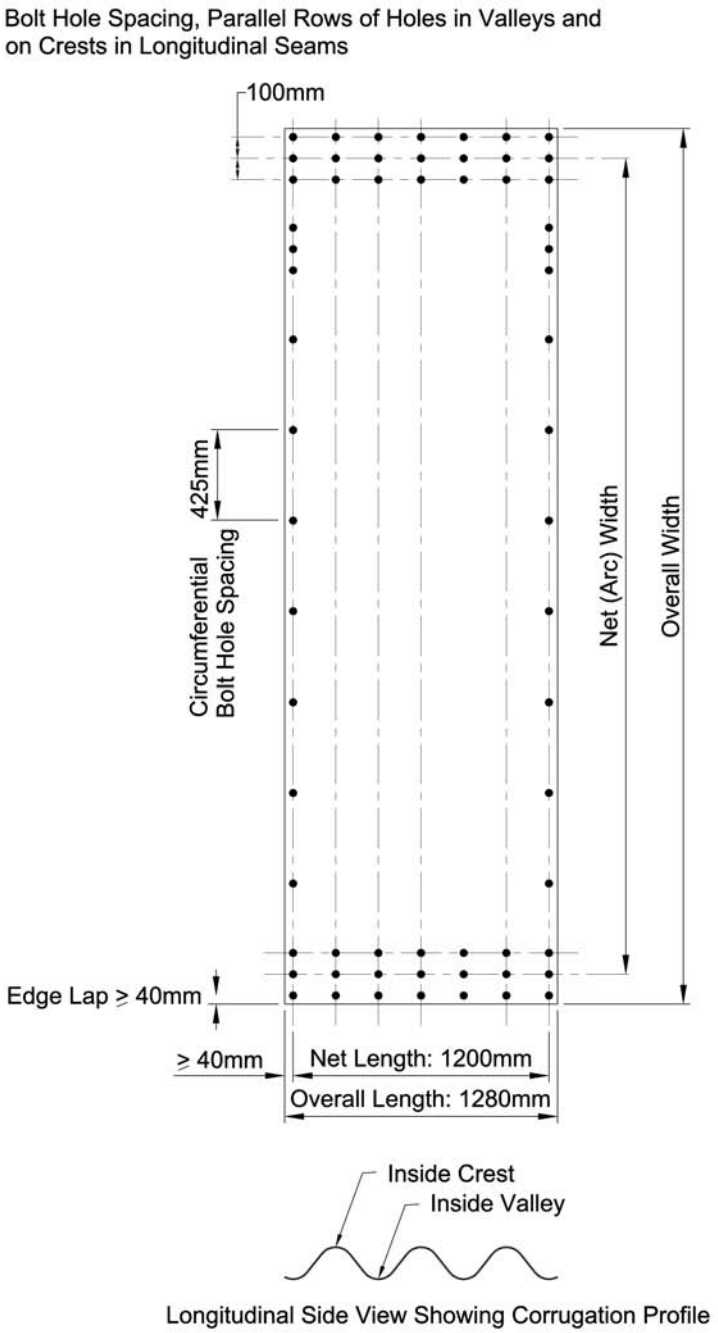

Figure 2.15 Deep Corrugated Structural Plate Type II plate configuration

Table 2.37 Deep corrugated structural plate sections
Type II: **400 x 150 mm** corrugation profile

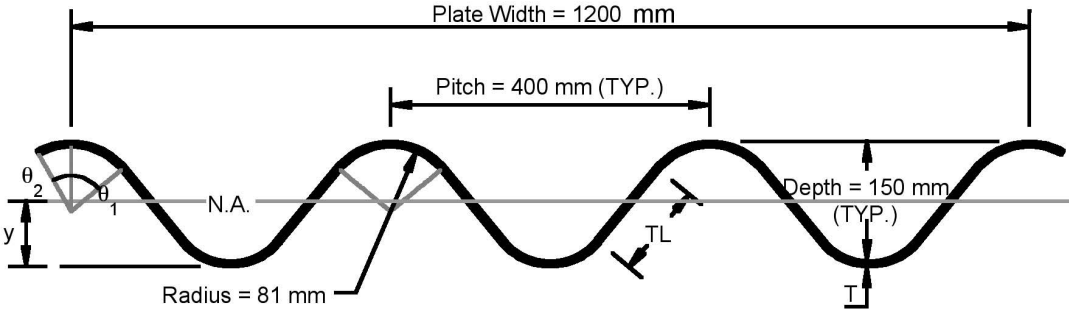

Specified Thickness mm	Design Thickness mm	Tangent Length TL mm	Tangent Angle 1 θ_1 degrees	Tangent Angle 2 θ_2 degrees	Area A mm^2/mm	Neutral Axis y mm	Moment of Inertia I mm^4/mm	Elastic Section Modulus S mm^3/mm	Radius of Gyration r mm	Plastic Section Modulus Z mm^3/mm	Developed Width Factor WF *
3.0	2.84	114.23	51.04	29.03	3.905	80.041	10886	136.01	52.80	184.16	1.375
4.0	3.89	112.84	51.23	28.83	5.351	80.563	14944	185.50	52.85	252.66	1.375
5.0	4.95	111.42	51.44	28.63	6.811	81.091	19060	235.04	52.90	322.05	1.376
6.0	6.00	110.00	51.64	28.44	8.260	81.614	23154	283.71	52.95	391.01	1.377
7.0	7.00	108.63	51.84	28.25	9.640	82.112	27071	329.69	52.99	456.91	1.377

*WF is the ratio of the flat plate width to the corrugated plate width.
Dimensions are subject to manufacturing tolerances.

Table 2.38

Deep corrugated structural plate arch
Type II: **400 x 150 mm** corrugation profile
Size and layout details

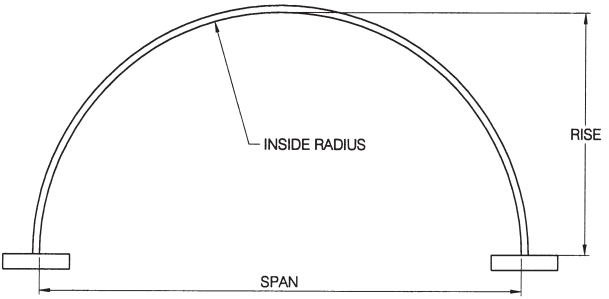

Span, mm	Rise, mm	Periphery, H	End Area, m^2	Radius, mm
8000	3905	29	24.36	4000
8500	4185	31	27.82	4250
9000	4465	33	31.51	4500
9500	4750	35	35.43	4750
10000	5030	37	39.57	5000
10500	5310	39	43.95	5250
11000	5595	41	48.55	5500
11500	5665	42	50.97	5750
12000	5950	44	55.93	6000
12500	6230	46	61.11	6250
13000	6510	48	66.52	6500
13500	6795	50	72.16	6750
14000	7075	52	78.03	7000
14500	7360	54	84.13	7250
15000	7430	55	87.30	7500
15500	7710	57	93.75	7750
16000	7995	59	100.43	8000

- End area is above footing.
- Other sizes available.
- All dimensions are inside.

SECTION C: SPECIFICATIONS

Specifications in Common Use

Specifications are divided into two basic classes – those covering design and construction, and those covering materials. Examples of design and construction specifications are the AASHTO and ASTM design specifications, and the Canadian Highway Bridge Design Code (CHBDC). Material specifications are published by CSA, AASHTO, ASTM and others. (See Tables 2.39 and 2.40.)

Material Specifications - Historical Background

CSA Standard G401 deals with material and fabrication requirements for the full range of corrugated steel pipe products currently used in Canada including riveted, helical lock seam, and structural plate pipe. Dimensional data is given for all types of round pipe and for standard pipe-arch made from corrugated steel pipe. Dimensional data is not provided for the wide variety of shapes available with structural plate, or for the fittings fabricated from corrugated steel pipe.

The CSA Standard is based on specifications previously prepared by the Corrugated Steel Pipe Institute. In 1970, the Corrugated Steel Pipe Institute first published Specification 501, representing an industry consensus concerning the materials and methods of fabrication that should be used in manufacturing corrugated steel pipe. In addition, the specification dealt with workmanship, repair, quality control, inspection and rejection.

In 1974, the Roads and Transportation Association of Canada, under the direction of the Metric Commission of Canada, undertook the task of developing metric standards for all highway products. As part of the task force, the Ontario Ministry of Transportation and Communications set up a Unified Drainage Standards Committee to examine existing standards for all drainage products. In 1978, the Corrugated Steel Pipe Institute published a revised Specification 501. The document proposed new product standards, predominantly in hard converted metric figures based on the recommendations from the Unified Drainage Standards Committee. It was from this background that the current CSA Standard G401 was developed.

Table 2.39 Design specifications

Agency	Reference
CSA	Canadian Highway Bridge Design Code - Section 7 - Buried Structures - CAN/CSA - S6
AASHTO	Standard Specification for Highway Bridges – Division 1, Section 12
AASHTO	LRFD Bridge Design Specifications - Section 12
ASTM	Standard Practice for Structural Design of Corrugated Steel Pipe, Pipe Arches, and Arches for Storm and Sanitary Sewers and Other Buried Applications - ASTM A796

Table 2.40 Material description and specifications

Material	Description	Specifications		
		AASHTO	ASTM	CSA
Zinc Coated Sheets & Coils	Steel base metal* with 610 g/m² zinc coating	M 218	A 929M	G401
Polymer Coated Sheets and Coils	Polymer coatings applied to sheets* and coils*	M 246	A 742M	G401
Aluminum Coated Coils	Steel base metal* coated with 305 g/m² of pure aluminum	M 274	A 929M	G401
Aluminum-Zinc Coated Coils	Steel base metal* coated with 214 g/m² of an aluminum-zinc alloy	M 289	A 929M	G401
Sewer and Drainage pipe	Corrugated pipe fabricated from any of the above sheets or coils. Pipe is fabricated by corrugating continuous coils into helical form with lockseam or welded seam, or by rolling annular corrugated mill sheets and plate, and riveting seams or field bolting seams as appropriate.			
	1. Galvanized corrugated steel pipe	M 36M	A 760M	G401
	2. Polymeric pre-coated sewer and drainage pipe	M 245	A 762M	G401
	3. Aluminized Steel Type 2 corrugated steel pipe	M 36M	A 760M	G401
	4. Aluminum-Zinc alloy coated corrugated steel pipe	-	A 760M	G401
	5. Galvanized spiral rib steel pipe	M 36M	A 760M	G401
	6. Aluminized Steel Type 2 spiral rib steel pipe	M 36M	A 760M	G401
	7. Structural plate pipe	M 167	A 761M	G401
Asphalt Coated Steel Sewer Pipe	Corrugated steel pipe of any of the types shown above with a 1.3 mm, high purity asphalt coating	M 190	A 849 A 862	G401
Invert Paved Steel Sewer Pipe	Corrugated steel pipe of any one of the types shown above with an asphalt pavement poured in the invert to cover the corrugation by 3.2 mm	M 190	A 849 A 862	G401
Fully Lined Steel Sewer Pipe	Corrugated steel pipe of the types shown above			
	With an internal asphalt lining centrifugally spun in place	M 190	A 849 A 862	G401
Cold Applied Bituminous Coatings	Fibrated mastic or coal tar base coatings of various viscosities for field or shop coating of corrugated pipe or structural plate	M 243	A 849	-
Gaskets and Sealants	1. Standard 0-ring gaskets	-	D1056	-
	2. Sponge neoprene sleeve gaskets			
	3. Gasketing strips, butyl or neoprene	-	C361	-
	4. Mastic sealant			

*Design yield strength = 230 MPa min.; tensile strength - 310 MPa min.; elongation (50mm) - 20% min.

SECTION D: CSP COUPLING SYSTEMS

A variety of pipe joints are available for connecting lengths of corrugated steel pipe.

The most common CSP joint uses a band around the pipe joint. Figure 2.16 illustrates what is meant by a band-type coupling.

The standard types of coupling bands are listed in Table 2.41 and shown in Figure 2.18. The band is drawn and secured on the pipe by connection devices, as shown in Figure 2.20. The pipe ends may be identical to the rest of the pipe barrel (plain ends), or in the case of helical pipe, the pipe ends may be reformed to an annular corrugation (reformed ends) as shown in Figure 2.17. A variety of gasket types can be used, according to band type, as shown in Figures 2.18 and 2.19. Table 2.41 includes information on the connection devices and the types of gaskets used with each type of coupling band, and on the type of pipe ends the band type can be used with.

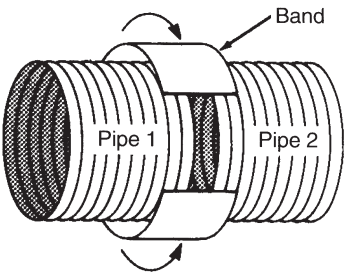

Figure 2.16: Typical band coupling for field joints.

Table 2.41 Coupling bands for corrugated steel pipe

Type Of Band	Cross - Section	Fastening Method			Gaskets			Pipe End Type Used With		
		Angles	Bar, Bolt & Strap	Wedge Lock	0 Ring	Sleeve or Strip	Mastic	Annular Plain	Helical Plain	Helical Reformed
Universal Dimple		x	x	x		x	x	x	x	x
Corrugated		x	x	x		x	x	x		x
Semi-Corrugated		x	x	x	x		x	x		x
Flat		x	x	x	x	x	x	x	x	x

Combination dog bone, and rod and lug coupler.

Semi-corrugated coupler installation.

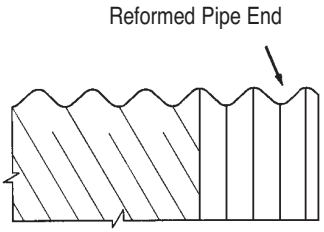

Figure 2.17 Reformed end of helically corrugated pipe.

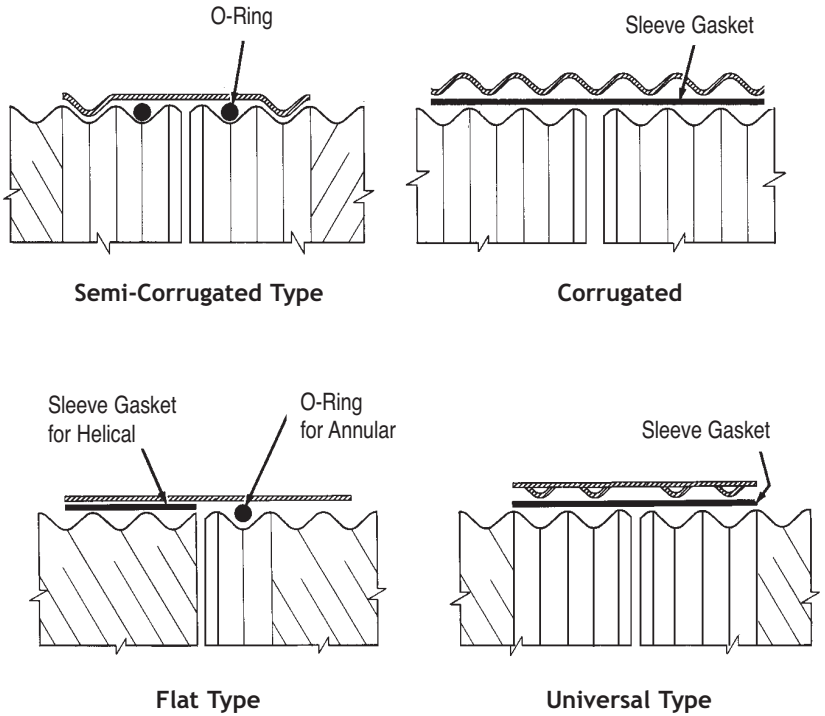

Figure 2.18 Standard CSP band types. Note: When gaskets are required they are installed with standard CSP band types as shown.

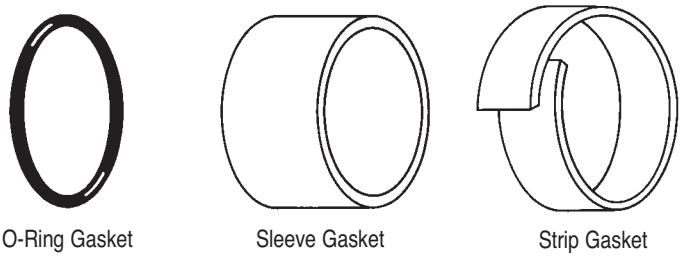

Figure 2.19 Standard gaskets for CSP.

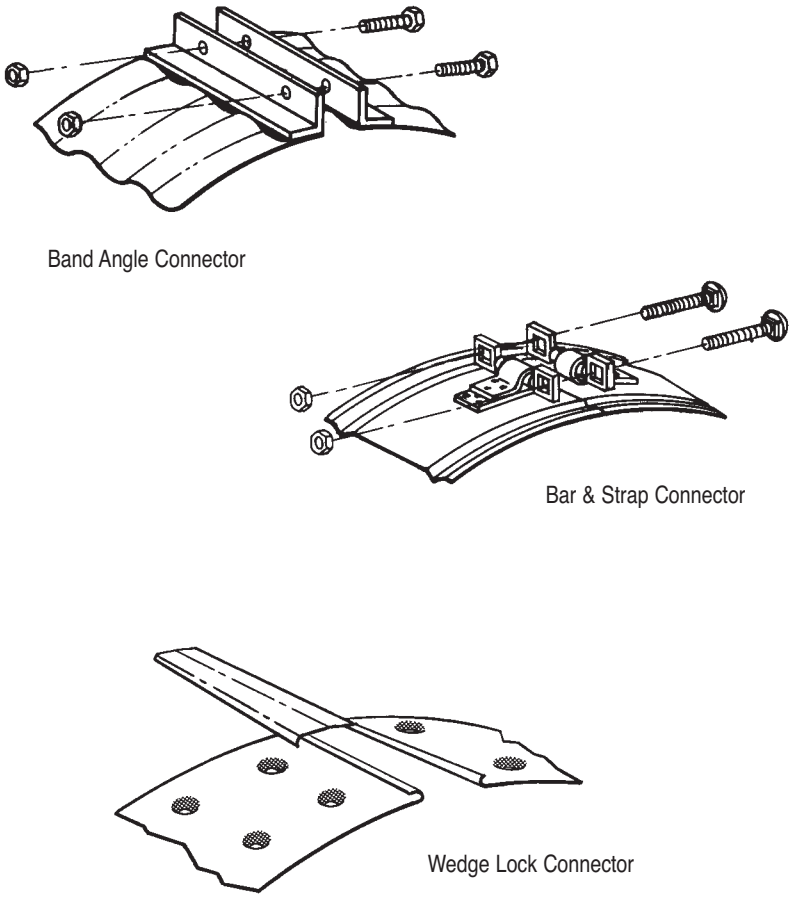

Figure 2.20 Standard band connectors for CSP .

Gain in Length

The nominal length of corrugated pipe and pipe-arch is usually increased at each coupling by a maximum amount dependent on the type of coupling. Where exact run lengths are required, such as between manholes or other fixed points, the designer should take this into account and include explicit instructions in the specification.

Leakage

With the exception of aerial sewer or water lines, the exfiltration (or infiltration) of moderate amounts of water may not be important. Where more restricted leakage is required (or airtightness in the case of ventilation lines), the couplings can be supplemented with gaskets (Figures 2.18 and 2.19).

A band puller eases installation of coupler.

Special Joints

For unusual conditions, (i.e. high pressure, extreme disjointing forces, threading pipe inside existing pipe, jacking or boring pipe, and deep vertical drop inlets) a variety of special designs are available or a new special joint may be designed by the manufacturer to meet specific requirements. A variety of special joints are illustrated in Figure 2.21.

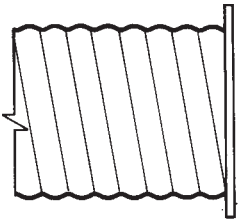

Flange Joint

Bolted flanges are attached to pipe ends.

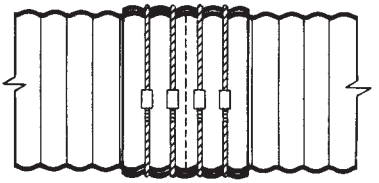

Rod & Lug

Band is secured by rod around band connected by lugs.

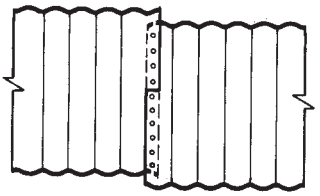

Open Lap Joint

Used in stab type joints for boring and jacking pipe. May be bolted if required

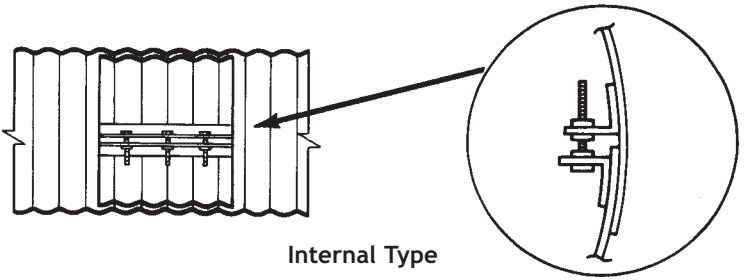

Internal Type

Figure 2.21 Illustration of various special CSP joints.

SECTION E: FITTINGS

One of the benefits of corrugated steel pipe is that it can be easily and economically fabricated into an assortment of fittings. Table 2.42 provides minimum dimensions for CSP elbows (round pipe). Table 2.43 provides minimum dimensions for CSP tees, crosses, laterals and wyes (round pipe).

Structural plate fittings are shop cut from curved corrugated plates and welded together. These structures are usually assembled and bolted in the shop in a trial fit to assure that all parts mate properly. The parts are then clearly marked for field assembly.

Table 2.42 Minimum dimensions for elbows for round CSP

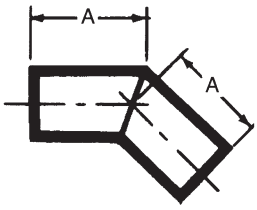

2 Piece

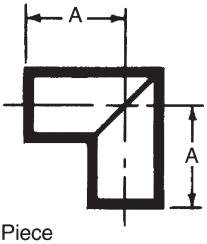

2 Piece

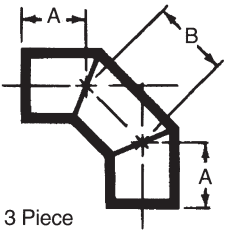

3 Piece

10° - 45° Elbow

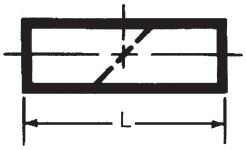

46° - 90° Elbow

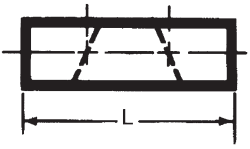

46° - 90° Elbow

Pipe Diameter	A	Total Length
150 - 600	300	600
700 - 1400	600	1200
1600 - 2400	900	1800

Pipe Diameter	A	Total Length
150 - 250	300	600
300 - 800	600	1200
900 - 1200	900	1800
1400 - 1600	1200	2400
1800 - 2400	1500	3000

Pipe Diameter	A	B	Total Length
150	200	200	600
200	185	230	600
250	175	250	600
300	460	280	1200
400	450	300	1200
500	425	350	1200
600	410	380	1200
700	400	400	1200
800	360	480	1200
900	600	600	1800
1000	610	580	1800
1200	570	660	1800
1400	750	900	2400
1600	780	840	2400
1800	750	900	2400
2000	1000	1000	3000
2200	950	1100	3000
2400	925	1150	3000

NOTE: The total length (mm) and pipe diameter (mm) listed are minimum requirements for fitting fabrication. Fittings with other dimensions to satisfy specific needs are also available. All dimensions are nominal. All dimensions are in millimetres.

Table 2.43 Minimum dimensions for CSP round fittings

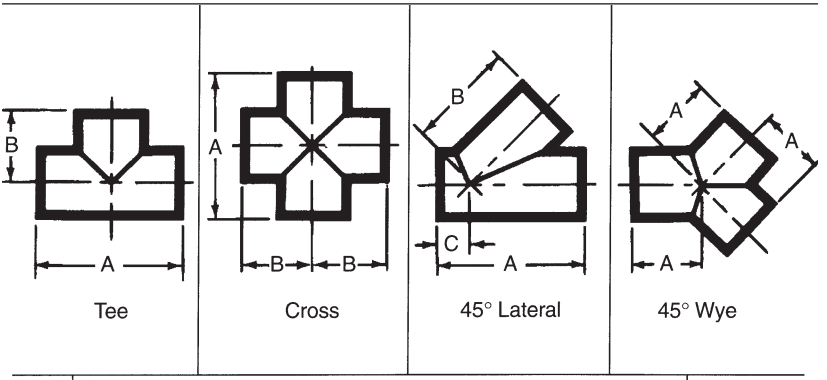

Main Diam.	Stub Same or Smaller Than Main Diameter										Same Diam.	
	Tee			Cross			45° Lateral				45° Wye	
(mm)	A	B	TL	A	B	TL	A	B	C	TL	A	TL
150	600	300	900	600	300	1200	900	600	300	1500	300	900
200	600	300	900	600	300	1200	900	600	300	1500	300	900
250	600	300	900	600	300	1200	900	600	300	1500	300	900
300	800	400	1200	1200	600	2400	1200	600	400	1800	600	1800
400	1200	600	1800	1200	600	2400	1200	900	400	2100	600	1800
500	1200	600	1800	1200	600	2400	1500	900	450	2400	600	1800
600	1200	600	1800	1200	600	2400	1500	900	500	2400	600	1800
700	1200	600	1800	1200	600	2400	1800	1200	600	3000	600	1800
800	1800	900	2700	1800	900	3600	2400	1500	660	3900	900	2700
900	1800	900	2700	1800	900	3600	2400	1500	660	3900	900	2700
1000	1800	900	2700	1800	900	3600	2400	1500	760	3900	900	2700
1200	1800	900	2700	1800	900	3600	3000	1800	810	4800	900	2700
1400	2400	1200	3600	2400	1200	4800	3600	2100	1100	5700	1200	3600
1600	2400	1200	3600	2400	1200	4800	3600	2400	1200	6000	1200	3600
1800	3000	1500	4500	3000	1500	6000	4200	2700	1250	6900	1500	4500
2000	3000	1500	4500	3000	1500	6000	4800	3000	1400	7800	1500	4500
2200	3000	1800	4500	3000	1500	6000	4800	3300	1500	8100	1500	4500
2400	3000	1800	5400	3600	1800	7200	4800	3300	1550	8100	1800	5400

TL - total net length needed to fabricate fitting
Note: All dimensions are in millimetres

Saddle Branch

Saddle branches are used to connect smaller branch lines to the main line, as illustrated in Figure 2.22. Saddles make it practical to accurately tie in connections after the main line is laid, and new connections can be effectively made on old lines. Saddles can be used to connect almost any type of pipe to a CSP main line. A common "universal" type of saddle branch stub to do this is shown in Figure 2.23.

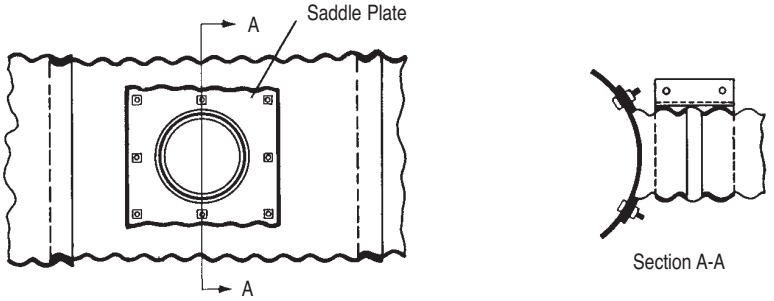

Side view of sewer with saddle branch in place

Figure 2.22 Saddle branch, bolted to main sewer on the job or at the plant, enables laterals and house connections to join the sewer.

Typical pre-fabricated CSP saddle branch fitting used in connecting house laterals or incoming pipe from catch basins.

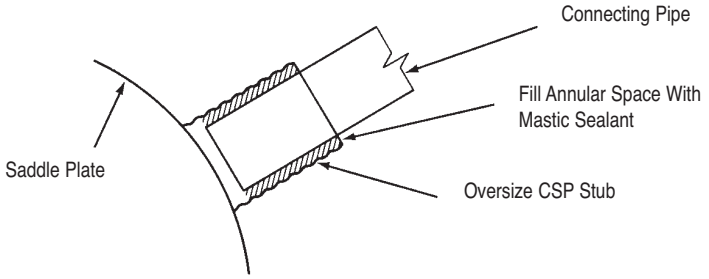

Figure 2.23 Universal connection detail using saddle branch.

Manhole riser on a detention tank with outlet pipe and groundwater drainage pipe.

Manholes and Catch Basins

Manholes and catch basins are available in corrugated pipe construction in two basic types as shown in Figure 2.24. The riser type of manhole is the simpler of the two and quite economical. It is only feasible for trunk lines of 900 mm diameter or greater. When junctions of smaller diameters are involved it is possible to use a vertical shaft of larger diameter CSP to connect the sewers. However, when the shaft is greater than 900 mm diameter, reduction details or a special manhole top must be used to suit the manhole cover. Typical reduction details are shown in Figure 2.24. Large diameter manholes or the connection between large diameter trunk lines and the CSP riser may require reinforcement. Standard catch basin details are illustrated in Figure 2.25.

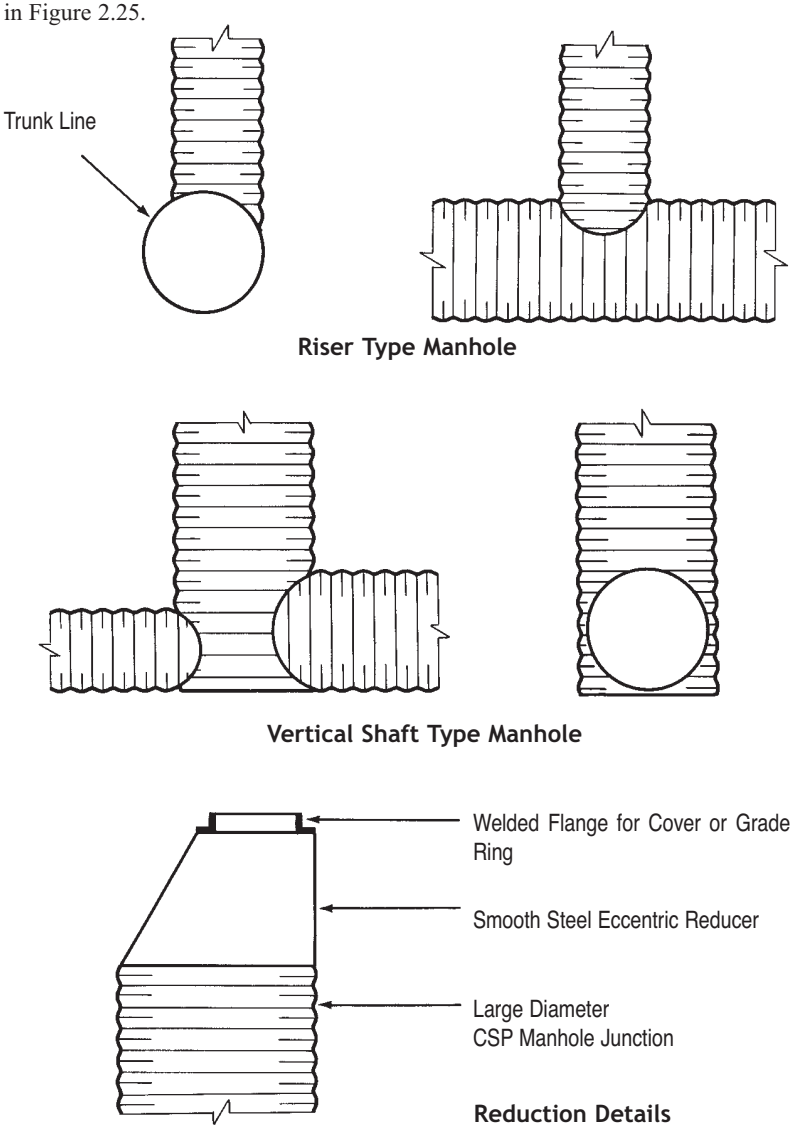

Figure 2.24 Illustration of types of CSP manholes.

Fabricated riser type CSP manhole.

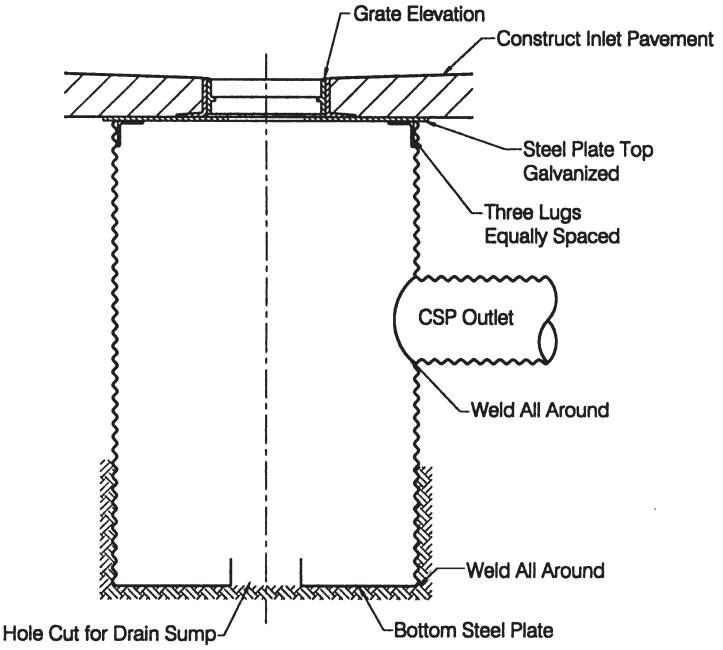

CROSS SECTION

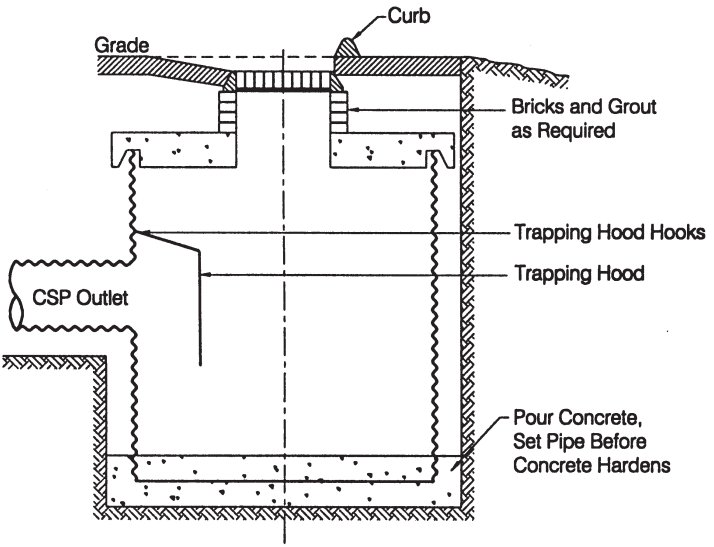

Figure 2.25 Cross sections of catch basins.

SECTION F: END FINISHES

Purpose

The principal purpose of an end finish on corrugated steel pipe culverts or spillways is hydraulic efficiency - to prevent scour at the inlet, to prevent undermining at the outlet and to increase capacity. Other purposes may be to provide structural reinforcement, retain the fill slope, discourage burrowing rodents, or improve appearance. For additional information, see Chapter 4 Hydraulics, and Chapter 6 Structural Design.

Types of Finish

Types of end finishes include (1) steel sheeting to serve as a low headwall and cutoff wall, (2) prefabricated flared end sections, (3) safety slope end sections, (4) riprap or retaining walls, and (5) skews and bevels.

1. Steel Sheeting. (Figure 2.26)
   One practical form of end protection consists of driving corrugated steel sheeting as a cutoff wall and low height headwall or endwall. It is cut to receive the last section of the culvert barrel, and capped at about mid-diameter with an unbalanced steel channel. This type of end finish is particularly appropriate for large culverts which may have the ends beveled or step beveled. The length of the sheeting below the bottom of the pipe should be adequate to resist scour impacts. This depth should be a minimum of 900 mm.

2. End Sections. (Figure 2.27)
   Steel end sections are shop fabricated for assembly in the field by attachment to round corrugated steel culverts ranging in size from 300 to 2400 mm in diameter and to pipe-arches ranging in size from 560 x 420 mm to 1880 x 1260 mm. Dimensions and other data are provided in Figure 2.27 and in Tables 2.44 and 2.45.

   These end sections are listed in standard specifications. They meet the requirements for efficient and attractive end finish on culverts, conduits spillways and sewer outfalls. They attach to the culvert ends by simple bolted connections of various designs (Figure 2.28), thus can be completely salvaged if lengthening or relocation is necessary.

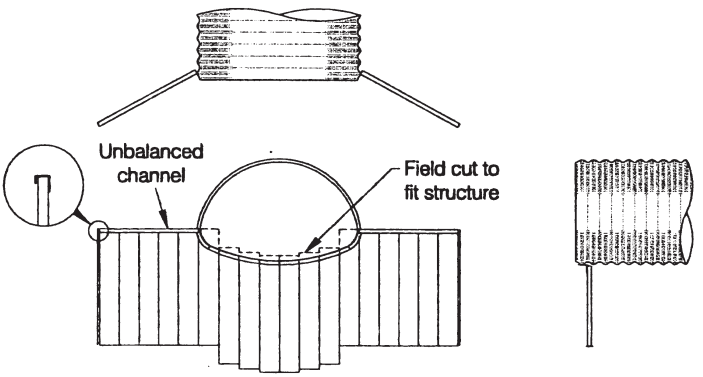

Figure 2.26 Illustration of how a steel sheeting headwall can be provided for a pipe-arch culvert.

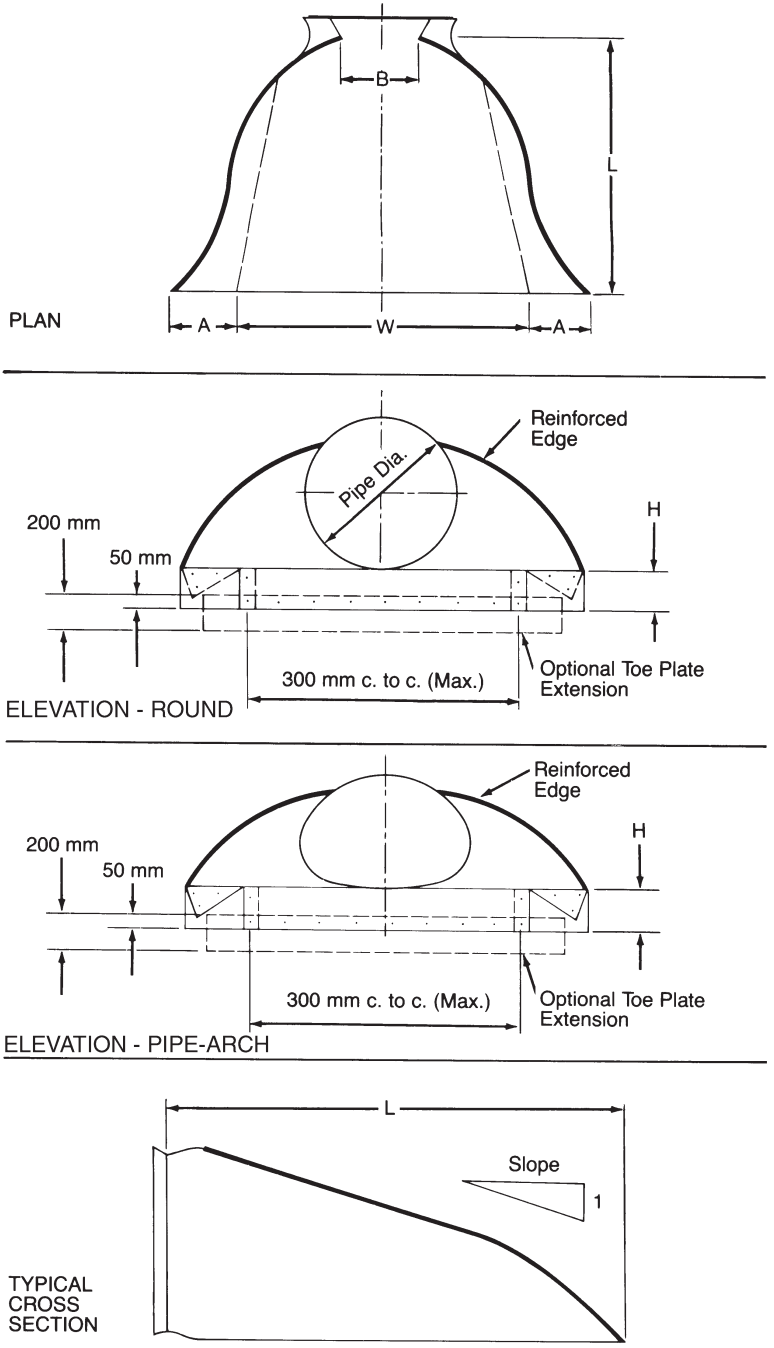

Figure 2.27 Details of end sections in round and pipe-arch shapes.

Table 2.44 Dimensions of galvanized steel end sections for round pipes
68 mm x 13 mm corrugation profile

Pipe Diameter mm	Galvanized Metal Thickness, mm	Approximate Dimensions, mm (See Figure 2.27)					Approximate Slope	Body
		A min.	B max.	H min.	L ± 50	W min.		
300	1.6	125	150	150	535	560	2.25	1 Pc
400	1.6	150	200	150	660	710	2.25	1 Pc
500	1.6	200	300	150	915	1015	2.125	1 Pc
600	1.6	225	330	150	1040	1170	2.125	1 Pc
800	2.0	280	405	200	1295	1400	2.125	1 Pc
900	2.0	330	485	230	1525	1780	2.0	2 Pc
1000	2.8	380	635	295	1750	2085	2.125	2 Pc
1200	2.8	430	740	305	1980	2235	2.0	2 Pc
1400	2.8	430	840	305	2135	2540	2.0	2 Pc
1600	2.8/3.5	430	915	305	2210	2845	1.875	3 Pc
1800	2.8/3.5	430	1120	305	2210	3050	1.5	3 Pc
2000	2.8/3.5	430	1220	305	2210	3300	1.375	3 Pc
2200	2.8/3.5	430	1320	305	2210	3455	1.333	3 Pc
2400	2.8/3.5	430	1475	305	2210	3660	1.125	3 Pc

Notes:
1. All 3-piece bodies to have 2.8 mm sides and 3.5 mm center panels. Multiple panel bodies to have lap seams which are to be tightly joined by galvanized rivets or bolts.
2. For 1600 mm and larger sizes, reinforced edges to be supplemented with galvanized stiffener angles. The angles to be attached by galvanized nuts and bolts.
3. Galvanized toe plate to be available as an accessory when specified on the order, and will be the same thickness as the End Section.

Table 2.45 Dimensions of galvanized steel end sections for pipe-arches
68 mm x 13 mm corrugation profile

Span x Rise, mm	Galvanized Metal Thickness, mm	Approximate Dimensions, mm (See Figure 2.27)					Approximate Slope	Body
		A min.	B max.	H min.	L ± 50	W min.		
560 x 420	1.6	150	280	150	610	865	2.0	1 Pc
680 x 500	1.6	180	405	150	810	1170	2.0	1 Pc
910 x 660	2.0	230	405	150	990	1475	1.875	1 Pc
1030 x 740	2.0	280	460	180	1170	1855	1.875	1 Pc
1150 x 820	2.8	305	535	230	1345	2080	1.75	2 Pc
1390 x 970	2.8	405	660	305	1575	2235	1.875	2 Pc
1630 x 1120	2.8	430	760	305	1755	2540	1.875	2 Pc
1880 x 1260	2.8/3.5	430	915	305	1955	3150	1.625	3 Pc

Notes:
1. All 3-piece bodies to have 2.8 mm sides and 3.5 mm center panels. Multiple panel bodies to have lap seams which are to be tightly joined by galvanized rivets or bolts.
2. For 1880 mm x 1260 mm size, reinforced edges to be supplemented with galvanized stiffener angles. The angles to be attached by galvanized nuts and bolts.
3. Galvanized toe plate to be available as an accessory when specified on the order, and will be the same thickness as the End Section.

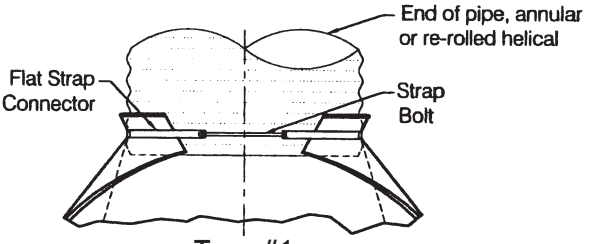

Type #1

Available in sizes 300 mm through 600 mm
Round and 560 x 420 mm through
680 x 500 mm Pipe-Arches.

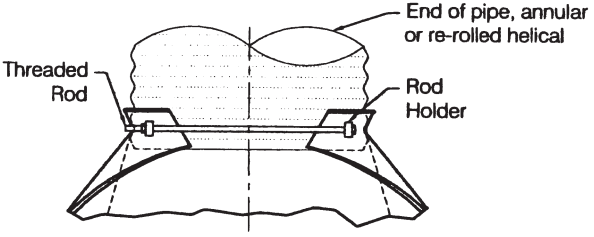

Type #2

Available in sizes 800 mm and 900 mm
Round and 910 x 660 mm through
1390 x 970 mm Pipe-Arches.

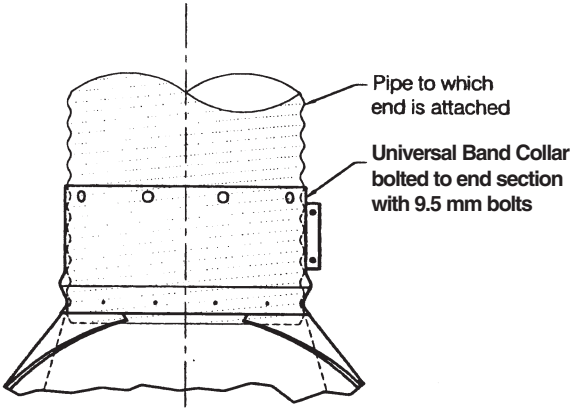

Type #5

Available for all Round and Pipe-Arch sizes shown.

(Type 1 and Type 2 connections are recommended for
the smaller sizes with annular ends.)

Figure 2.28 Details of end section connections for round and pipe-arch shapes.

3. Safety Slope End Sections, (Figures 2.29, 2.30 and 2.31)
   Recent data from U.S. state and federally sponsored research studies show that flatter slopes on roadside embankments greatly minimize the hazard potential to motorists. Application of this concept, with the design of 4 to 1 and 6 to 1 roadside embankments, has contributed significantly to improving the safety of highways. The use of safety slope end sections on highway culverts maintains the safety design of the flattened roadway embankments.

   The pre-fabricated safety slope end sections are available with 4 to 1 or 6 to 1 slopes and are designed to fit round pipe sizes from 300 mm through 1400 mm and pipe-arch sizes from 450 x 340 mm through 2130 x 1400 mm.

   While safety is the primary reason for using safety slope end sections, the tapered flare improves the hydraulic efficiency of the culvert at both the inlet and outlet ends. A deep skirt anchors the end section while preventing scouring and undercutting. The flat apron or bottom panels eliminate twisting or mis-alignment of the end treatment.

   Motorists who encroach on these flattened slopes, defined as recoverable slopes, generally stop their vehicles or slow them enough to return to the roadway safely. When culverts are required on these recoverable slopes they must be made traversable or present a minimal hazard to an errant vehicle. The preferred treatment is to match the slope of the culvert with the embankment slope.

   On cross drainage structures, a small culvert is defined as a pipe with a 750 mm span or less. On such small culverts no other treatment is required (See Figure 2.29). Single structures with end sections having spans greater than 750 mm can be made traversable for passenger size vehicles by using safety bars to reduce the clear opening spans (see Figures 2.30 and 2.31). The use of safety bars to make the safety slope end sections traversable should not decrease the hydraulic capacity of the culvert.

   As referenced by AASHTO, 30 full scale vehicular crash tests have shown that passenger size vehicles can traverse cross drainage structures with safety slope end sections equipped with cross bars (Figure 2.30). The tests showed that, when bars are spaced on 762 mm centers, automobiles can safely cross at speeds as low as 30 km/hr and as high as 100 km/hr.

   Parallel drainage structures are those oriented parallel to the main flow of traffic. They typically are used under driveways, field entrances, access ramps, intersecting side roads and median crossovers. These culverts present a significant safety hazard because they can be struck head-on by impacting vehicles. As with cross drains, the end treatments on parallel drains should match the traversable slope. Research shows that for parallel drainage structures, safety bars set on 610 mm centers will significantly reduce wheel snagging (Figure 2.31).

   Safety slope end sections are efficient and provide an attractive end finish on cross and parallel drainage structures. They attach to the culvert end by simple bolted connections and can be completely salvaged if lengthening of the structure or relocation is required. Dimensions and other data are given in Tables 2.46 to 2.48.

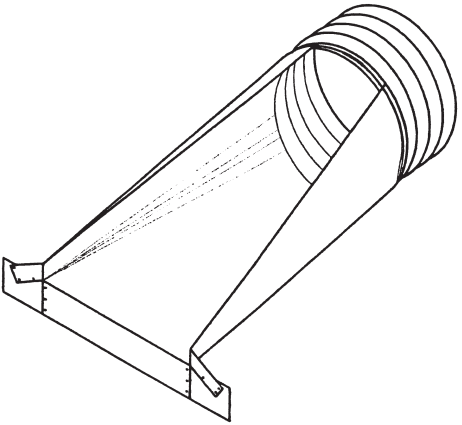

Figure 2.29 Safety slope end section.

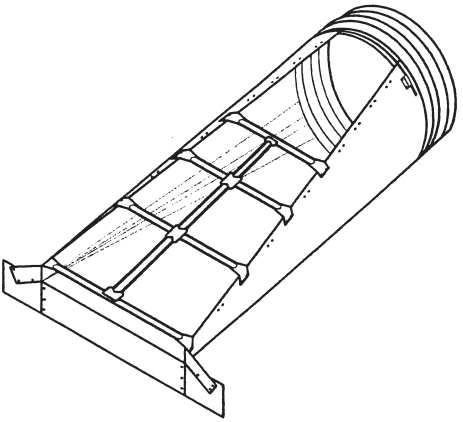

Figure 2.30: Cross drainage safety end section.

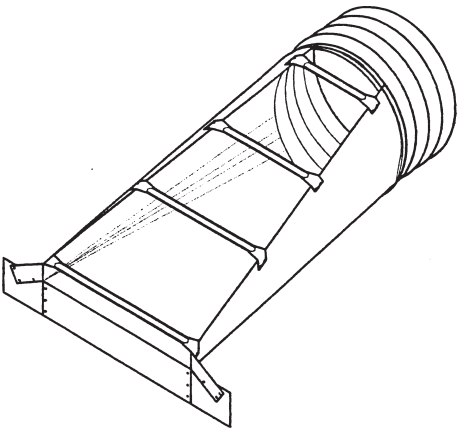

Figure 2.31: Parallel drainage safety end section.

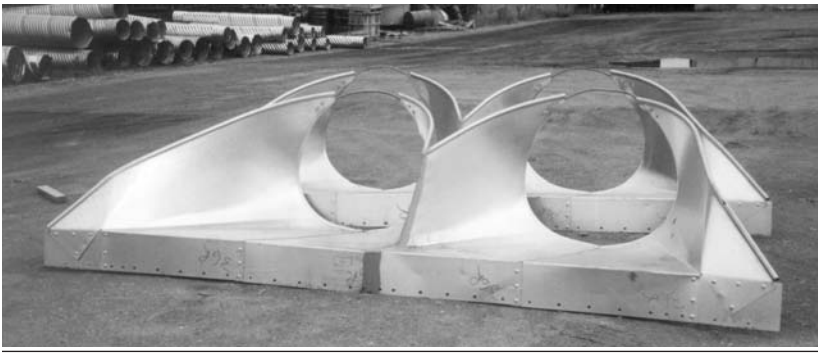

Special fabricated twin end sections.

Table 2.46 Dimensions of safety end sections for round CSP (See Figure 2.27)

Pipe Diameter (mm)	Nominal Thickness (mm)	Toe Plate Dimensions (mm)				L Dimensions (mm)	
		A	H	W	Overall Width	1:4 Slope Length	1:6 Slope Length
300	1.6	200	150	450	850	n/a	700
400	1.6	200	150	550	950	800	1200
450	1.6	200	150	600	1000	1000	1500
500	1.6	200	150	650	1050	1200	1800
525	1.6	200	150	675	1075	1300	1950
600	1.6	200	150	750	1150	1600	2400
700	2.8	300	225	850	1450	1800	2700
750	2.8	300	225	900	1500	2000	3000
800	2.8	300	225	950	1550	2200	3300
900	2.8	300	225	1050	1650	2600	3900
1000	2.8	400	300	1150	1950	3000	4500
1050	2.8	400	300	1200	2000	3200	4800
1200	2.8	400	300	1350	2150	3800	5700
1350	2.8	400	300	1500	2300	4400	6600
1400	2.8	400	300	1550	2350	4600	6900

Table 2.47 Dimensions of safety end sections for CSP pipe-arches (See Figure 2.27)

Equivalent Diameter (mm)	Pipe-Arch Dimensions (mm)		Nominal Thickness (mm)	Toe Plate Dimensions (mm)				L Dimensions (mm)	
	Span	Rise		A	H	W	Overall Width	1:4 Slope Length	1:6 Slope Length
400	450	340	1.6	200	150	600	1000	560	840
500	560	420	1.6	200	150	710	1110	880	1320
600	680	500	1.6	200	150	830	1230	1200	1800
700	800	580	2.8	300	225	950	1550	1320	1980
800	910	660	2.8	300	225	1060	1660	1640	2460
900	1030	740	2.8	300	225	1180	1780	1960	2940
1000	1150	820	2.8	400	300	1300	2100	2280	3420
1200	1390	970	2.8	400	300	1540	2340	2880	4320
1400	1630	1120	2.8	400	300	1780	2580	3480	5220
1600	1880	1260	2.8	400	300	2030	2830	4040	6060
1800	2130	1400	2.8	400	300	2280	3080	4600	6900

Table 2.48 Dimensions of safety end sections of spiral rib pipe-arches (See Figure 2.27)

Equivalent Diameter (mm)	Pipe-Arch Dimensions (mm)		Nominal Thickness (mm)	Toe Plate Dimensions (mm)				L Dimensions (mm)	
	Span	Rise		A	H	W	Overall Width	1:4 Slope Length	1:6 Slope Length
450	500	390	1.6	200	150	650	1050	760	1140
525	580	465	1.6	200	150	730	1130	1060	1590
600	660	530	1.6	200	150	810	1210	1320	1980
750	830	660	2.8	300	225	980	1580	1640	2460
900	1010	790	2.8	300	225	1160	1760	2160	3240
1050	1160	920	2.8	400	300	1310	2110	2680	4020
1200	1340	1050	2.8	400	300	1490	2290	3200	4800
1350	1485	1190	2.8	400	300	1635	2435	3760	5640
1500	1670	1300	2.8	400	300	1820	2620	4200	6300
1650	1815	1450	2.8	400	300	1965	2765	4800	7200

4. Riprap or Retaining Walls.
   The slope at the end of a culvert (mitered or square cut) can be protected economically against erosion by riprap or retaining walls (see Chapter 13). Stone riprap may be sealed by portland cement grout or asphaltic concrete. A geotextile is normally used under riprap to prevent the smaller grained soil beneath it from washing out.

5. Skews and Bevels.
   Depending on the structural capability and hydraulic efficiencies desired, corrugated steel pipe and structural plate structures can be designed and manufactured with square, skewed or beveled ends.

   Square, skewed and beveled ends are shown in Figure 2.32. Manufacturers can provide assistance in designing these types of end finishes to meet specific project requirements.

   When head walls are not considered in the design, or when skews or beveled ends are used, the end treatment (especially of structural plate structures) requires special attention. Incomplete structural rings act as retaining walls, and must be reinforced or tied back to maintain structural integrity. Both skewed and beveled ends are usually reinforced as shown in Figure 2.33. Reinforcement of structure ends is a desired design practice, regardless of structure size.

   Details and essential considerations are discussed in Chapter 6, Structural Design.

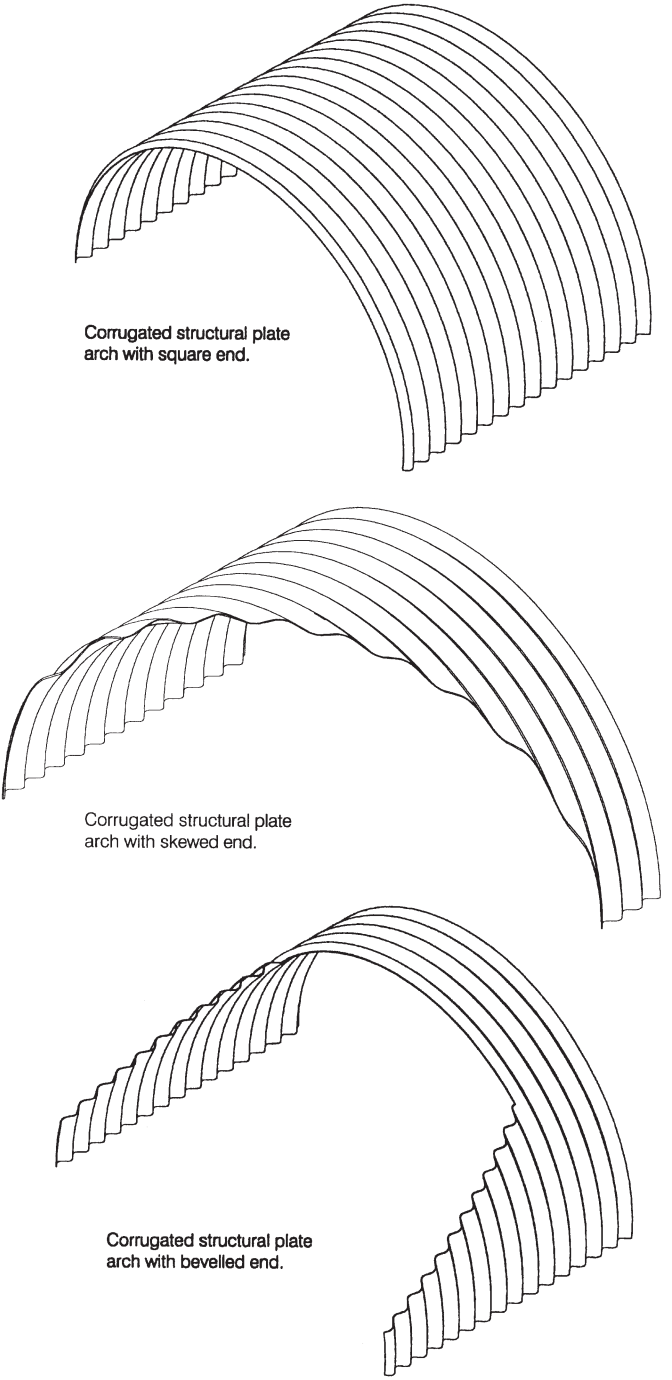

Figure 2.32 End type definitions.

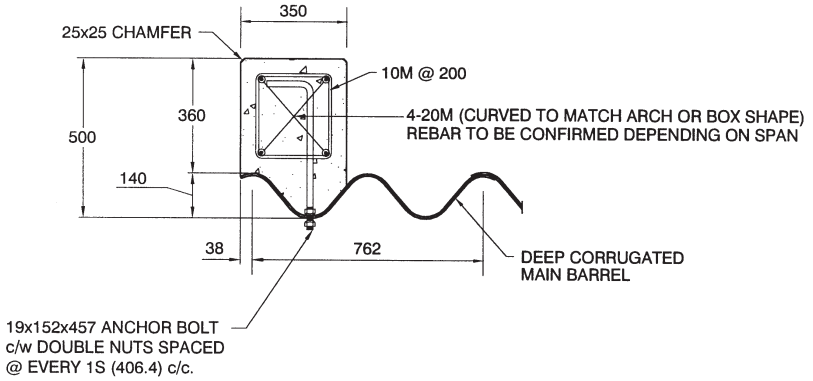

Detail - Concrete Collar

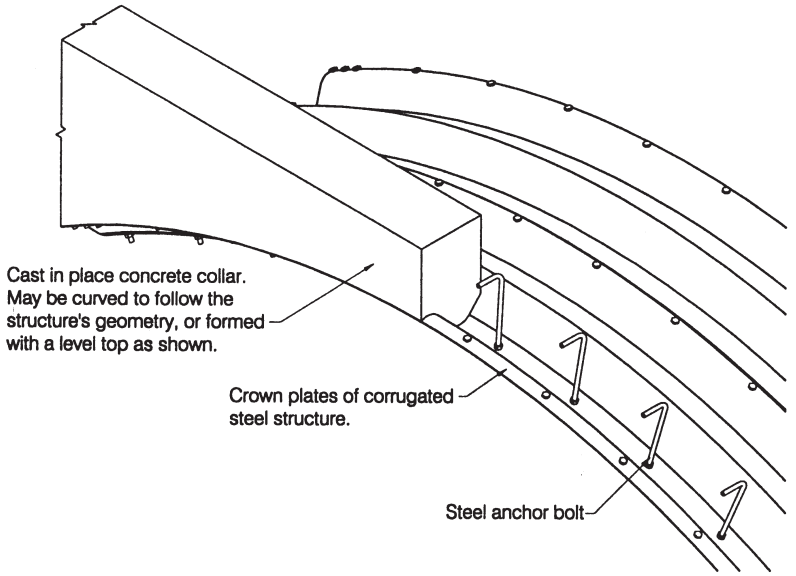

Figure 2.33 Concrete end reinforcing collar.

BIBLIOGRAPHY

AASHTO, *Guide to Standardized Highway Drainage Products*, AASHTO-AGC-ARTBA Joint Committee Task Force 13, American Association of State Highway and Transportation Officials, 444 N. Capitol St., N.W., Ste. 249, Washington, D.C. 20001, 2000.

AASHTO, *Roadside Design Guide*, American Association of State Highway and Transportation Officials, 444 N. Capitol St., N.W., Ste. 249, Washington, D.C. 20001, 1996.

AASHTO, "Standard Specification for Corrugated Steel Pipe, Metallic-Coated for Sewers and Drains," M3 6/M3 6M, *Standard Specifications for Transportation Materials and Methods of Sampling and Testing*, American Association of State Highway and Transportation Officials, 444 N. Capitol St., N.W., Ste. 249, Washington, D.C. 20001.

AASHTO, "Standard Specification for Corrugated Steel Structural Plates, Zinc Coated, for Field-Bolted Pipe, Pipe Arches, and Arches," M I 67/M I 67M, *Standard Specifications for Transportation Materials and Methods of Sampling and Testing*, American Association of State Highway and Transportation Officials, 444 N. Capitol St., N.W., Ste. 249, Washington, D.C. 20001.

ASTM, "Standard Specification for Corrugated Steel Pipe, Metallic-Coated for Sewers and Drains," A760/A760M, *Annual Book of Standards*, Vol. 01.06, American Society for Testing and Materials, I 00 Barr Harbor Drive, PO Box C700, West Conshohocken, PA 19428-2959.

ASTM, "Standard Specification for Corrugated Steel Structural Plates, Zinc Coated, for Field-Bolted Pipe, Pipe Arches, and Arches," A761/A761M, *Annual Book of Standards*, Vol. 01.06, American Society for Testing and Materials, 100 Barr Harbor Drive, PO Box C700, West Conshohocken, PA 19428-2959.

ASTM, "Standard Specification for Corrugated Steel Pipe, Polymer Precoated for Sewers and Drains," A762/A762M, *Annual Book of Standards*, Vol. 01.06, American Society for Testing and Materials, 100 Barr Harbor Drive, PO Box C700, West Conshohocken, PA 19428-2959.

ASTM, "Standard Practice for Structural design of Corrugated Steel Pipe, Pipe-Arches, and Arches for Storm and Sanitary Sewers and Other Buried Applications," A796/A796M, *Annual Book of Standards*, Vol. 01.06, American Society for Testing and Materials, 100 Barr Harbor Drive, PO Box C700, West Conshohocken, PA 19428-2959.

ASTM, "Standard Practice for Installing Factory-Made Corrugated Steel Pipe for Sewers and Other Applications," A798/A798M, *Annual Book of Standards,* Vol. 01.06, American Society for Testing and Materials, 100 Barr Harbor Drive, PO Box C700, West Conshohocken, PA 19428-2959.

ASTM, "Standard Practice for Installing Steel Structural Plate Pipe for Sewers and Other Applications," A807/A807M, *Annual Book of Standards*, Vol. 01.06,

American Society for Testing and Materials, 100 Barr Harbor Drive, PO Box C700, West Conshohocken, PA 19428-2959.

ASTM, "Standard Practice for Life-Cycle Cost Analysis of Corrugated Steel Pipe Used for Culverts, Storm Sewers, and Other Buried Applications," A930, *Annual Book of Standards*, Vol. 01.06, American Society for Testing and Materials, 100 Barr Harbor Drive, PO Box C700, West Conshohocken, PA 19428-2959.

ASTM, "Standard Specification for Corrugated Steel Box Culverts," A964/A964M, *Annual Book of Standards*, Vol. 01.06, American Society for Testing and Materials, 100 Barr Harbor Drive, PO Box C700, West Conshohocken, PA 19428-2959.

ASTM, "Standard Practice for Structural Design of Reinforcements for Fittings in Factory-Made Corrugated Steel Pipe for Sewers and Other Applications," A998/A998M, *Annual Book of Standards*, Vol. 01.06, American Society for Testing and Materials, 100 Barr Harbor Drive, PO Box C700, West Conshohocken, PA 19428-2959.

CHAPTER 3

HYDROLOGY

INTRODUCTION

The hydrological cycle is a continuous process whereby water precipitates from the atmosphere and is transported from ocean and land surfaces back to the atmosphere from which it again precipitates. There are many inter-related phenomena involved in this process as conceptualized in Figure 3.1. Different specialist interests, such as meteorologists, oceanographers or agronomists, focus on different components of the cycle. From the point of view of the drainage engineer, the relevant part of the cycle can be represented in idealistic fashion by the block diagram of Figure 3.2.

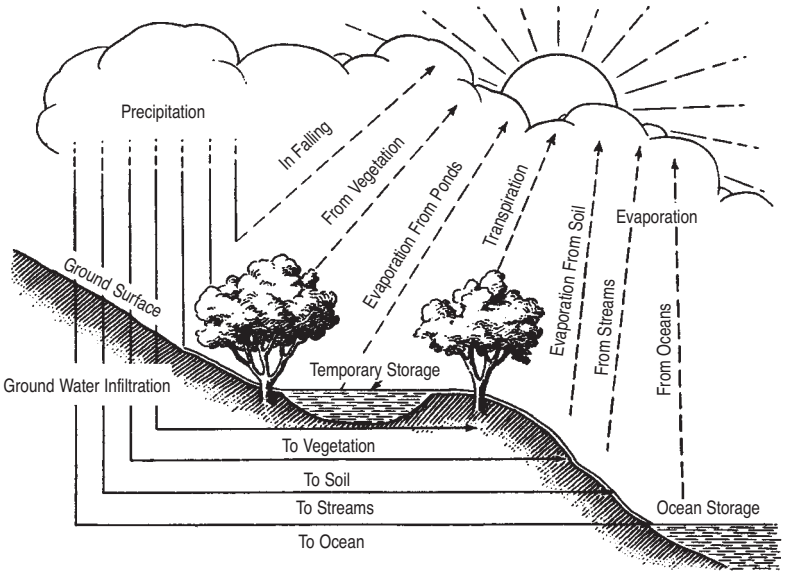

Figure 3.1 Hydrologic Cycle - where water comes from and where it goes. From M.G. Spangler's "Soil Engineering".

Urbanization complicates that part of the hydrologic cycle which is affected by the modifications of natural drainage paths, impounding of water, diversion of storm water and the implementation of storm water management techniques.

The objective of this chapter is to introduce the drainage engineer to the methods of estimating precipitation and runoff; those components of the hydrologic cycle which affect design decisions. Emphasis is placed on the description of alternative methods for analyzing or simulating the rainfall-runoff process, particularly where these apply to computer models. This should help the user of these models in determining appropriate data and in interpreting the results, thereby lessening the "black box" impression with which users are often faced.

It is often necessary to describe many of these processes in mathematical terms. Every effort has been made to keep the presentation simple but some fundamental knowledge of hydrology has been assumed.

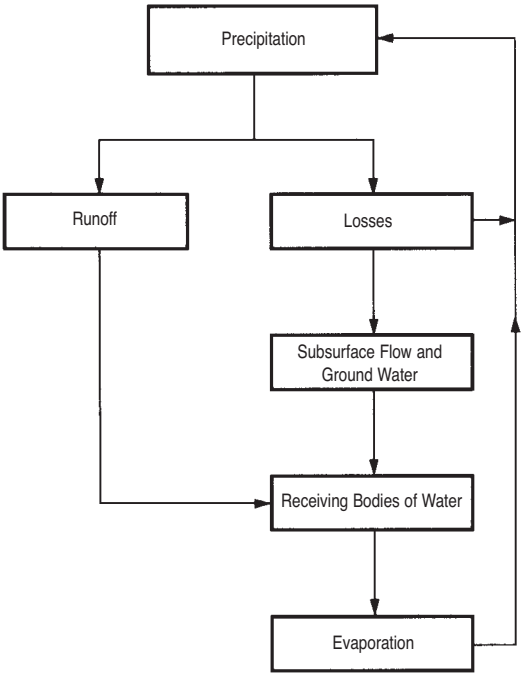

Figure 3.2 Block diagram of Hydrologic Cycle.

ESTIMATION OF RAINFALL

The initial data required for drainage design is a description of the rainfall. In most cases this will be a single event storm, i.e., a period of significant and continuous rainfall preceded and followed by a reasonable length of time during which no rainfall occurs. Continuous rainfall records extending many days or weeks may sometimes be used for the simulation of a series of storms, particularly where the quantity rather than the quality of runoff water is of concern.

The rainfall event may be either historic, taken from recorded events, or idealized. The main parameters of interest are the total amount (or depth) of precipitation (P_{tot}), the duration of the storm (t_d), and the distribution of the rainfall intensity (i) throughout the storm event. The frequency of occurrence (N) of a storm is usually expressed in years and is an estimate based on statistical records of the long-term average time interval which is expected to elapse between successive occurrences of two storms of a particular severity (for example, a storm of depth P_{tot} with a duration of t_d is expected to occur, on average, every N years). The word "expected" is emphasized because there is absolutely no certainty that after a 25-year storm has occurred, a storm of equal or greater severity will not occur for another 25 years. This fact, while statistically true, is often difficult to convey to concerned or affected citizens.

Rainfall Intensity-Duration-Frequency Curves

Rainfall intensity-duration-frequency (IDF) curves are derived from the statistical analysis of rainfall records compiled over a number of years. Each curve represents

the intensity-time relationship for a certain return frequency, from a series of storms. These curves are then said to represent storms of a specific return frequency.

The intensity, or the rate of rainfall, is usually expressed in depth per unit time. The frequency of occurrence (N), in years, is a function of the storm intensity. Larger storm intensities occur less frequently. The highest intensity for a specific duration of N years of records is called the N year storm, with a frequency of once in N years.

The curves may be in graphical form as shown in Figure 3.3, or may be represented by individual equations that express the time-intensity relationships for specific frequencies. The formulae are in the form:

$$i = \frac{a}{(t + c)^b}$$

where: i = intensity (mm/hr)
t = time (minutes)
a,b,c = constants developed for each IDF curve

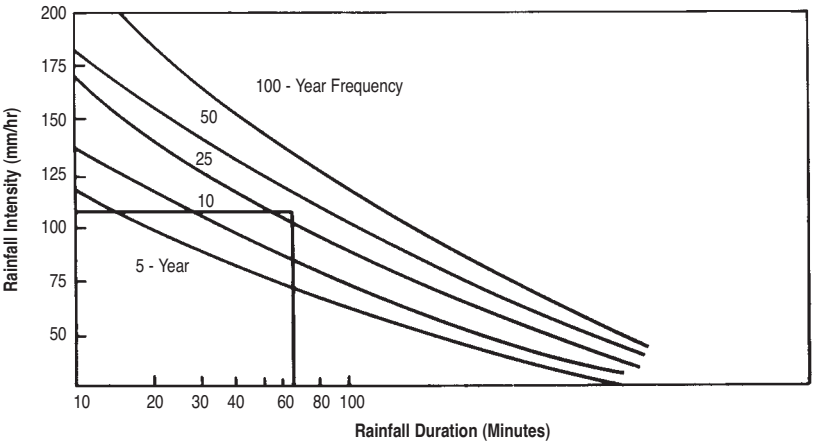

Figure 3.3 Rainfall intensities for various storm frequencies vs rainfall duration.

The fitting of rainfall data to the equation may be obtained by either graphical or least square methods.

It should be noted that the IDF curves do not represent a rainfall pattern, but are the distribution of the highest intensities over time durations for a storm of N frequency.

The rainfall intensity-duration-frequency curves are readily available from governmental agencies, local municipalities and towns, and are therefore widely used for designing drainage facilities and flood flow analysis.

Rainfall Hyetographs

The previous section discussed the dependence of the average rainfall intensity of a storm on various factors. It is also important to consider, from historical rainfall events, the way in which the precipitation is distributed in time over the duration of

the storm. This can be described using a rainfall hyetograph which is a graphical representation of the variation of rainfall intensity with time. Rainfall hyetographs can be obtained (usually in tabular rather than graphical form) from weather stations which have suitable records of historical rainfall events. Figure 3.4 shows a typical example.

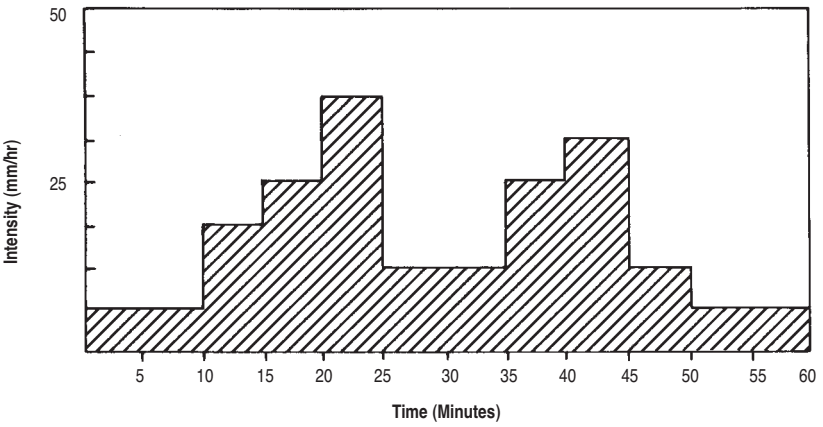

Figure 3.4 Rainfall hyetograph.

Large structure under construction.

Rainfall intensity is usually plotted in the form of a bar graph. It is therefore assumed that the rainfall intensity remains constant over the timestep used to describe the hyetograph. This approximation becomes a truer representation of reality as the timestep gets smaller. However, very small timesteps may require very

large amounts of data to represent a storm. At the other extreme, it is essential that the timestep not be too large, especially for short duration events or for very small catchments. Otherwise, peak values of both rainfall and runoff can be "smeared" with consequent loss of accuracy. This point should be kept in mind, when using a computer model, since it is standard practice to employ the same timestep for the description of the rainfall hyetograph and for the computation of the runoff hyetograph. Choice of a timestep is therefore influenced by:

a) accuracy of rainfall-runoff representation,
b) the number of available data points, and
c) size of the watershed.

Synthetic Rainfall Hyetographs

An artificial or idealized hyetograph may be required for a number of reasons, two of which are:

a) The historic rainfall data may not be available for the location or the return frequency desired.
b) It may be desirable to standardize the design storm to be used within a region so that comparisons of results from various studies may be made.

Foundation prepared for large structure.

The time distribution of the selected design hyetograph will significantly affect the timing and magnitude of the peak runoff. Therefore, care should be taken in selecting a design storm to ensure that it is representative of the rainfall patterns in the area under study. In many cases, depending upon the size of the watershed and degree of urbanization, it may be necessary to use several different rainfall hyetographs to determine the sensitivity of the results to the different design storms. For example, when runoff from pervious areas is significant, it will be found that late peaking storms produce a higher peak runoff than early peaking storms of the same total depth. Early peaking storms are reduced in severity by the initially high infiltration capacity of the ground.

Selection of the storm duration will also influence the hyetograph characteristics. The handbook of the Natural Resource Conservation Service (formerly Soil Conservation Service) recommends that a six hour storm duration be used for watersheds with a time of concentration (which is discussed in detail later in this chapter) less than or equal to six hours. For watersheds where the time of concentration exceeds six hours, the storm duration should equal the time of concentration.

A number of different synthetic hyetographs are described in the following sections. These include:

a) uniform rainfall (as in the Rational Method),
b) the Chicago hyetograph,
c) the SCS design storms, and
d) Huff's storm distribution patterns.

Uniform Rainfall

The simplest possible design storm is to assume that the intensity is uniformly distributed throughout the storm duration. The intensity is then represented by the formula:

$$i = i_{ave} = \frac{P_{tot}}{t_d}$$

where: P_{tot} = total precipitation
t_d = storm duration

This simplified approximation is used in the Rational Method assuming that the storm duration, t_d, is equal to the time of concentration, t_c, of the catchment (see Figure 3.5). A rectangular rainfall distribution is only used for approximations or rough estimates. It can, however, have some use in explaining or visualizing rainfall runoff processes since any hyetograph may be considered as a series of such uniform, short duration pulses of rainfall.

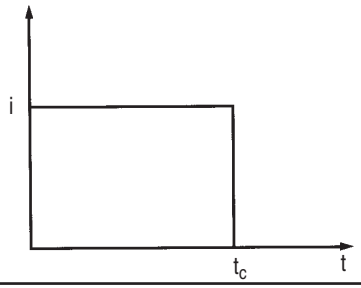

Figure 3.5 Uniform rainfall intensity.

The Chicago Hyetograph

The Chicago hyetograph is assumed to have a time distribution such that if a series of ever increasing "time-slices" were analyzed around the peak rainfall, the average intensity for each "slice" would lie on a single IDF curve. Therefore, the Chicago design storm displays statistical properties which are consistent with the statistics of the IDF curve. That being the case, the synthesis of the Chicago hyetograph starts with the parameters of an IDF curve together with a parameter (r) which defines the fraction of the storm duration which occurs before the peak rainfall intensity. The value of r is derived from the analysis of actual rainfall events and is generally in the range of 0.3 to 0.5.

The continuous curves of the hyetograph in Figure 3.6 can be computed in terms of the times before (t_b) and after (t_a) the peak intensity by the two equations below.

After the peak:

$$i_a = \frac{a\left[(1-b)\dfrac{t_a}{1-r} + c\right]}{\left(\dfrac{t_a}{1-r} + c\right)^{1+b}}$$

Before the peak:

$$i_b = \frac{a\left[(1-b)\dfrac{t_b}{r} + c\right]}{\left(\dfrac{t_b}{r} + c\right)^{1+b}}$$

where: t_a = time after peak
t_b = time before peak
r = ratio of time before the peak occurs to the total duration time (the value is derived from analysis of actual rainfall events)

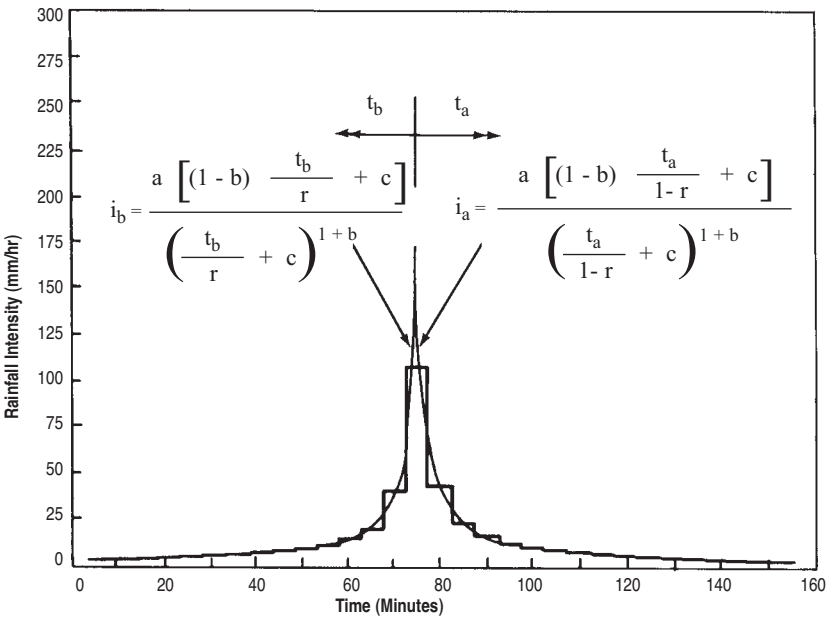

Figure 3.6 Chicago hyetograph.

CSP for storm drainage project.

Detention tank with internal baffle for sediment and debris control. (Ministry of Transportation, Ontario)

The Chicago storm is commonly used for small to medium watersheds (0.25 km^2 to 25 km^2) for both rural and urban conditions. Typical storm durations are in the range of 1.0 to 4.0 hours. It has been found that peak runoff flows computed using a Chicago design storm are higher than those obtained using other synthetic or historic storms. This is due to the fact that the Chicago storm attempts to model the statistics of a large collection of real storms and thus tends to present an unrealistically extreme distribution. Also, the resultant peak runoff may exhibit some sensitivity to the time step used; very small timesteps give rise to more peaked runoff hydrographs (which are discussed later in this chapter).

The Huff Rainfall Distribution Curves

Huff analyzed the significant storms in 11 years of rainfall data recorded by the State of Illinois. The data was represented in non-dimensional form by expressing the accumulated depth of precipitation, P_t, (that is, the accumulated depth at time t after the start of rainfall) as a fraction of the total storm depth, P_{tot}, and plotting this ratio as a function of a non-dimensional time, t/t_d, where t_d is time of duration.

The storms were grouped into four categories depending on whether the peak rainfall intensity fell in the 1st, 2nd, 3rd or 4th quartile of the storm duration. In each category, a family of curves was developed representing values exceeded in 90%, 80%, 70%, etc., of the storm events. Thus the average of all the storm events in a particular category is represented by the 50% curve. Table 3.1 shows the dimensionless coefficients for each quartile expressed at intervals of 5% of t_d.

Table 3.1 Dimensionless Huff storm coefficients

t/t_d	P_t/P_{tot} for Quartile			
	1	2	3	4
0.00	0.000	0.000	0.000	0.000
0.05	0.063	0.015	0.020	0.020
0.10	0.178	0.031	0.040	0.040
0.15	0.333	0.070	0.072	0.055
0.20	0.500	0.125	0.100	0.070
0.25	0.620	0.208	0.122	0.085
0.30	0.705	0.305	0.140	0.100
0.35	0.760	0.420	0.155	0.115
0.40	0.798	0.525	0.180	0.135
0.45	0.830	0.630	0.215	0.155
0.50	0.855	0.725	0.280	0.185
0.55	0.880	0.805	0.395	0.215
0.60	0.898	0.860	0.535	0.245
0.65	0.915	0.900	0.690	0.290
0.70	0.930	0.930	0.790	0.350
0.75	0.944	0.948	0.875	0.435
0.80	0.958	0.962	0.935	0.545
0.85	0.971	0.974	0.965	0.740
0.90	0.983	0.985	0.985	0.920
0.95	0.994	0.993	0.995	0.975
1.00	1.000	1.000	1.000	1.000

The first quartile curve is generally associated with relatively short duration storms in which 62% of the precipitation depth occurs in the first quarter of the storm duration. The fourth quartile curve is normally used for longer duration storms in

which the rainfall is more evenly distributed over the duration t_d and is often dominated by a series of rain showers or steady rain or a combination of both. The third quartile has been found to be suitable for storms on the Pacific seaboard.

The study area and storm duration for which the distributions were developed vary considerably, with t_d varying from 3 to 48 hours and the drainage basin area ranging from 25 to 1000 km^2. The distributions are most applicable to Midwestern regions of North America and regions of similar rainfall climatology and physiography.

To use the Huff distribution the user need only specify the total depth of rainfall (P_{tot}), the duration (t_d) and the desired quartile. The curve can then be scaled up to a dimensional mass curve and the intensities are obtained from the mass curve for the specified timestep (t).

SCS Storm Distributions

The U.S. Soil Conservation Service (SCS) design storm was developed for various storm types, storm durations and regions of the United States. The storm duration was initially selected to be 6 hours. Durations of 3 hours and up to 48 hours have, however, been developed. The rainfall distribution varies depending on duration and location. The 3, 6, 12 and 24 hour distributions for the SCS Type II storm are given in Table 3.2. These distributions are used in all regions of the United States and Canada with the exception of the Pacific coast.

Table 3.2 SCS Type II rainfall distribution for 3h,6h,12h and 24h durations

3 Hour			6 Hour			12 Hour			24 Hour		
Time ending	F_{inc} (%)	F_{cum} (%)	Time ending	F_{inc} (%)	F_{cum} (%)	Time ending	F_{inc} (%)	F_{cum} (%)	Time ending	F_{inc} (%)	F_{cum} (%)
						0.5	1	1			
			0.5	2	2	1.0	1	2	2	2	2
						1.5	1	3			
0.5	4	4	1.0	2	4.0	2.0	1	4	4	2	4
						2.5	2	6			
			1.5	4	8	3.0	2	8	6	4	8
						3.5	2	10			
1.0	8	12	2.0	4	12	4.0	2	12	8	4	12
						4.5	3	15			
			2.5	7	19	5.0	4	19	10	7	19
						5.5	6	25			
1.5	58	70	3.0	51	70	6.0	45	70	12	51	70
						6.5	9	79			
			3.5	13	83	7.0	4	83	14	13	83
						7.5	3	86			
2.0	19	89	4.0	6	89	8.0	3	89	16	6	89
						8.5	2	91			
			4.5	4	93	9.0	2	93	18	4	93
						9.5	2	95			
2.5	7	96	5.0	3	96	10.0	1	96	20	3	96
						10.5	1	97			
			5.5	2	98	11.0	1	98	22	2	98
						11.5	1	99			
3.0	4	100	6.0	2	100	12.0	1	100	24	2	100

The design storms were initially developed for large (25 km^2) rural basins. However, the longer duration (6 to 48 hour) distributions and a shorter 1 hour duration thunderstorm distribution have been used in urban and smaller rural areas.

The longer duration storms tend to be used for sizing detention facilities while at the same time providing a reasonable peak flow for sizing the conveyance system.

ESTIMATION OF EFFECTIVE RAINFALL

Only a fraction of the precipitation which falls during a storm contributes to the overland flow or runoff from the catchment. The balance is diverted in various ways.

Evaporation — In certain climates, some fraction of the rainfall evaporates before reaching the ground. Since rainfall is measured by gauges on the earth's surface, this subtraction is automatically taken into account in recorded storms and may be ignored by the drainage engineer.

Interception — This fraction is trapped in vegetation or roof depressions and never reaches the catchment surface. It eventually dissipates by evaporation.

Infiltration — Rainfall which reaches a pervious area of the ground surface will initially be used to satisfy the capacity for infiltration into the upper layer of the soil. After even quite a short dry period the infiltration capacity can be quite large (for example, 100 mm/hr) but this gradually diminishes after the start of rainfall as the storage capacity of the ground is saturated. The infiltrated water will:

a) evaporate directly by capillary rise,
b) rise through the root system and be transpired from vegetal cover, where it then evaporates,
c) move laterally through the soil in the form of ground water flow toward a lake or a stream, and/or
d) penetrate to deeper levels to recharge the ground water.

Surface — If the intensity of the rainfall reaching the ground exceeds the infiltration capacity of the ground, the excess will begin to fill the small depressions on the ground surface. Clearly this will begin to happen almost immediately on impervious surfaces. Only after these tiny reservoirs have been filled will overland flow commence and contribute to the runoff from the catchment. Since these surface depressions are not uniformly distributed, it is quite possible that runoff will commence from some fraction of the catchment area before the depression storage on another fraction is completely filled. Typical recommended values for surface depression storage are given in Table 3.3.

Table 3.3 Typical recommended values for depth of surface depression storage

Land Cover	Recommended Value (mm)
Large Paved Areas	2.5
Roofs, Flat	2.5
Fallow Land Field without Crops	5.0
Fields with Crops (grain, root crops)	7.5
Grass Areas in Parks, Lawns	7.5
Wooded Areas and Open Fields	10.0

The effective rainfall is thus that portion of the storm rainfall which contributes directly to the surface runoff hydrograph. This can be expressed as follows:

Runoff = Precipitation - Interception - Infiltration - Surface Depression Storage

All of the terms are expressed in units of depth.

A number of methods are available to estimate the effective rainfall and thus the amount of runoff for any particular storm event. These range from the runoff coefficient (C) of the Rational Method to relatively sophisticated computer implementations of semi-empirical methods representing the physical processes. The method selected should be based on the size of the drainage area, the data available, and the degree of sophistication warranted for the design. Three methods for estimating effective rainfall are:

1) the Rational Method,
2) the Soil Conservation Service (SCS) Method, and
3) the Horton Method.

The Rational Method

If an impervious area (A) is subjected to continuous and long lasting rainfall of a specific intensity (i), then after a time (time of concentration, T_c) the runoff rate will be given by the equation:

$$Q = k \cdot C \cdot i \cdot A$$

where: Q = peak runoff rate (m^3/s)
k = constant = 0.00278
C = runoff coefficient
i = rainfall intensity (mm/hr)
A = drainage area (hectares)

When using the Rational Method, the following assumptions are considered:

a) The rainfall intensity is uniform over the entire watershed during the entire storm duration.
b) The maximum runoff rate occurs when the rainfall lasts as long or longer than the time of concentration.
c) The time of concentration is the time required for the runoff from the most remote part of the watershed to reach the point under design.

The variable C is the component of the Rational Method formula that requires the most judgement, and the runoff is directly proportional to the value assigned to C. Care should be exercised in selecting the value as it incorporates all of the hydrologic abstractions, soil types and antecedent conditions. Table 3.4 lists typical values for C, as a function of land use, for storms that have (approximately) a 5 to 10 year return period. It is important to note that the appropriate value of C depends on the magnitude of the storm and significantly higher values of C may be necessary for more extreme storm events. This is perhaps one of the most serious deficiencies associated with this method.

Table 3.4 Recommended runoff coefficients based on description of area

Description of Area	Runoff Coefficients
Business	
Downtown	0.70 to 0.95
Neighbourhood	0.50 to 0.70
Residential	
Single-family	0.30 to 0.50
Multi-units, detached	0.40 to 0.60
Multi-units, attached	0.60 to 0.75
Residential (suburban)	0.25 to 0.40
Apartment	0.50 to 0.70
Industrial	
Light	0.50 to 0.80
Heavy	0.60 to 0.90
Parks, cemeteries	0.10 to 0.25
Playgrounds	0.20 to 0.35
Railroad yard	0.20 to 0.35
Unimproved	0.10 to 0.30

High profile arch completed assembly.

It often is desirable to develop a composite runoff coefficient based on the percentage of different types of surfaces in the drainage area. This procedure is often applied to typical "sample" blocks as a guide to the selection of reasonable values of the coefficient for an entire area. Coefficients, with respect to surface type, are shown in Table 3.5.

Table 3.5 Recommended runoff coefficients based on character of surface

Character of Surface	Runoff Coefficients
Pavement	
Asphalt and Concrete	0.70 to 0.95
Brick	0.70 to 0.85
Roofs	0.75 to 0.95
Lawns, sandy soil	
Flat, 2 percent	0.75 to 0.95
Average, 2 to 7 percent	0.18 to 0.22
Steep, 7 percent	0.25 to 0.35

The coefficients in these two tables are applicable for storms of 5- to 10-year frequencies. Less frequent, higher intensity storms will require the use of higher coefficients because infiltration and other losses have a proportionally smaller effect on runoff. The coefficients are based on the assumption that the design storm does not occur when the ground surface is frozen.

Pipe-arch with manhole riser, inlet pipe and reinforced bulkhead.

SCS Method

Referred to here as the SCS Method, the Natural Resource Conservation Service (formerly Soil Conservation Service) developed a relationship between rainfall (P),

retention (S), and effective rainfall or runoff (Q). The retention, or potential storage in the soil, is established by selecting a curve number (CN). The curve number is a function of soil type, ground cover and Antecedent Moisture Condition (AMC).

The hydrological soil groups, as defined by SCS soil scientists, are:

A. (Low runoff potential) Soils having a high infiltration rate, even when thoroughly wetted, consisting chiefly of deep, well to excessively well drained sands or gravel.
B. Soils having a moderate infiltration rate when thoroughly wetted, consisting chiefly of moderately deep to deep, moderately well to well drained soils with moderately fine to moderately coarse texture.
C. Soils having a slow infiltration rate when thoroughly wetted, consisting chiefly of soils with a layer that impedes downward movement of water, or soils with moderately fine to fine texture.
D. (High runoff potential) Soils having a very slow infiltration rate when thoroughly wetted, consisting chiefly of clay soils with a high swelling potential, soils with a permanent high water table, soils with a clay pan or clay layer at or near the surface, and shallow soils over nearly impervious material.

Knowing the hydrological soil group and the corresponding land use, the runoff potential or CN value of a site may be determined. Table 3.6 lists typical CN values.

Table 3.6 **Runoff curve number for selected agricultural, suburban and urban land use (Antecedent Moisture Condition II and I_a = 0.2 S)**

			HYDROLOGIC SOIL GROUP			
LAND USE DESCRIPTION			**A**	**B**	**C**	**D**
Cultivated land[1]:	without conservation treatment		72	81	88	91
	with conservation treatment		62	71	78	81
Pasture or range land:	poor condition		68	79	86	89
	good condition		39	61	74	80
Meadow:	good condition		30	58	71	78
Wood or forest land:	thin stand, poor cover, no mulch		45	66	77	83
	good cover[2]		25	55	70	77
Open spaces, lawns, parks, golf courses, cemeteries, etc.						
good condition:	grass cover on 75% or more of the area		39	61	74	80
fair condition:	grass cover on 50% to 75% of the area		49	69	79	84
Commercial and business areas (85% impervious)			89	92	94	95
Industrial districts (72% impervious)			81	88	91	93
Residential[3]:						
	Average lot size	Average % Impervious[4]				
	0.05 hectare or less	65	77	85	90	92
	0.10 hectare	38	61	75	83	87
	0.15 hectare	30	57	72	81	86
	0.20 hectare	25	54	70	80	85
	0.40 hectare	20	51	68	79	84
Paved parking lots, roofs, driveways, etc.[5]			98	98	98	98
Streets and roads:	paved with curbs and storm sewers[5]		98	98	98	98
	gravel		76	85	89	91
	dirt		72	82	87	89

1. For a more detailed description of agricultural land use curve numbers refer to National Engineering Handbook, Section 4, Hydrology, Chapter 9, Aug 1972.
2. Good cover is protected from grazing and litter and brush cover soil.
3. Curve numbers are computed assuming the runoff from the house and driveway is directed towards the street with a minimum of roof water directed to lawns where additional infiltration could occur.
4. The remaining pervious areas (lawn) are considered to be in good pasture condition for these curve numbers.
5. In some warmer climates of the country a curve number of 95 may be used.

Three levels of Antecedent Moisture Condition are considered in the SCS Method. The Antecedent Moisture Condition (AMC) is defined as the amount of rainfall in a period of five to thirty days preceding the design storm. In general, the heavier the antecedent rainfall, the greater the runoff potential. AMC definitions are as follows:

AMC I - Soils are dry but not to the wilting point. This is the lowest runoff potential.

AMC II - This is the average case, where the soil moisture condition is considered to be average.

AMC III - Heavy or light rainfall and low temperatures having occurred during the previous five days. This is the highest runoff potential.

The CN values in Table 3.6 are based on Antecedent Moisture Condition II. Thus, if moisture conditions I or III are chosen, then a corresponding CN value is determined as provided in Table 3.7.

Table 3.7 **Curve number relationship for different antecedent moisture conditions**

CN for	CN for		CN for	CN for	
Condition II	Condition I	Condition III	Condition II	Condition I	Condition III
100	100	100	60	40	78
99	97	100	59	39	77
98	94	99	58	38	76
97	91	99	57	37	75
96	89	99	56	56	75
95	87	98	55	35	74
94	85	98	54	34	73
93	83	98	53	33	72
92	81	97	52	32	71
91	80	97	51	31	70
90	78	96	50	31	70
89	76	96	49	30	69
88	75	95	48	29	68
87	73	95	47	28	67
86	72	94	46	27	66
85	70	94	45	26	65
84	68	93	44	25	64
83	67	93	43	25	63
82	66	92	42	24	62
81	64	92	41	23	61
80	63	91	40	22	60
79	62	91	39	21	59
78	60	90	38	21	58
77	59	89	37	20	57
76	58	89	36	19	56
75	57	88	35	18	55
74	55	88	34	18	54
73	54	87	33	17	53
72	53	86	32	16	52
71	52	86	31	16	51
70	51	85	30	15	50
69	50	84			
68	48	84	25	12	43
67	47	83	20	9	37
66	46	82	15	6	30
65	45	82	10	4	22
64	44	81	5	2	13
63	43	80	0	0	0
62	42	79			
61	41	78			

The potential storage in the soils is based on an initial abstraction (I_a) which is the interception, infiltration and depression storage prior to runoff, and infiltration after runoff.

The effective rainfall is defined by the relationship:

$$Q = \frac{(P - I_a)^2}{P + S - I_a}$$

where: $S = [(100/CN) - 10] \cdot 25.4$

The original SCS Method assumed the value of I_a to be equal to 0.2S. However, many engineers have found that this may be overly conservative, especially for moderate rainfall events and low CN values. Under these conditions, the I_a value may be reduced to be a lesser percentage of S or may be estimated and input directly into the above equation.

The Horton Method

The Horton infiltration equation, which defines the infiltration capacity of the soil, changes the initial rate (f_o) to a lower rate (f_c). The infiltration capacity is an upper bound and is realized only when the available rainfall equals or exceeds the infiltration capacity. Therefore, if the infiltration capacity is given by:

$$f_{cap} = f_c + (f_o - f_c)\, e^{-t \cdot k}$$

then the actual infiltration (f), will be defined by one of the following two equations:

$$f = f_{cap} \quad \text{for } i \geq f_{cap}$$

$$f = i \quad \text{for } i \leq f_{cap}$$

where:
- f = actual infiltration rate into the soil
- f_{cap} = maximum infiltration capacity of the soil
- f_o = initial infiltration capacity
- f_c = final infiltration capacity
- i = rainfall intensity
- k = exponential decay constant (1/hours)
- t = elapsed time from start of rainfall (hours)

Figure 3.7 shows a typical rainfall distribution and infiltration curve.

For the initial timesteps the infiltration rate exceeds the rainfall rate. The reduction in infiltration capacity is dependent more on the reduction in storage capacity in the soil rather than the elapsed time from the start of rainfall. To account for this the infiltration curve should, therefore, be shifted (dashed line for first timestep, Δt) by an elapsed time that would equate the infiltration volume to the volume of runoff.

A further modification is necessary if surface depression is to be accounted for. Since the storage depth must be satisfied before overland flow can occur, the initial finite values of the effective rainfall hyetograph must be reduced to zero until a depth equivalent to the surface depression storage has been accumulated. The final hyetograph is the true effective rainfall which will generate runoff from the catchment surface.

CSP with rodent grate.

Joints wrapped with geotextile to prevent migration of fines into the pipes.

The selection of the parameters for the Horton equation depends on soil type, vegetal cover and antecedent moisture conditions. Table 3.8 shows typical values for f_o and f_c (mm/hour) for a variety of soil types under different crop conditions. The value of the lag constant should typically be between 0.04 and 0.08.

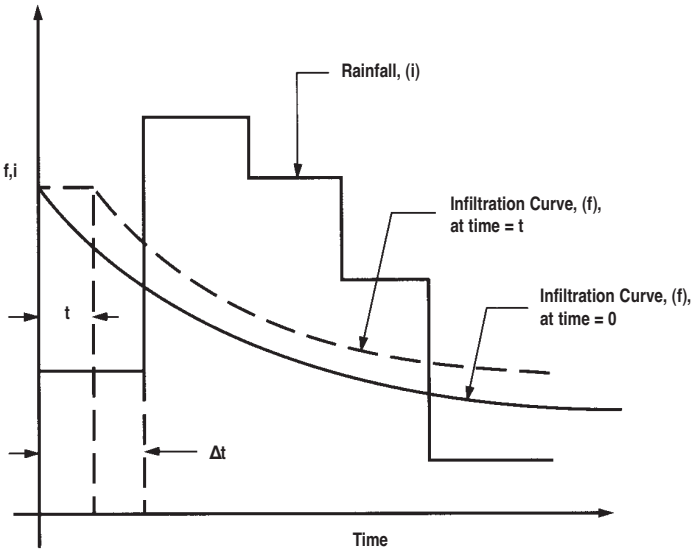

Figure 3.7 Representation of the Horton equation.

Table 3.8 Typical values for the Horton equation parameters (mm/hr)

	Loam, Clay K = 0.08		Clayey Sand K = 0.06		Sand, Loess, Gravel K = 0.04	
Land Surface Types	f_o	f_c	f_o	f_c	f_o	f_c
Fallow land field without crops	15	8	33	10	43	15
Fields with crops (grain, root crops, vines)	36	3	43	8	64	10
Grassed verges, playground, ski slopes	20	3	20	3	20	3
Noncompacted grassy surface, grass areas in parks, lawns	43	8	64	10	89	18
Gardens, meadows, pastures	64	10	71	15	89	18
Coniferous woods	53*	53*	71*	71*	89*	89*
City parks, woodland, orchards	89	53	89	71	89*	89*

*K=0

Comparison of the SCS and Horton Methods

Figure 3.8 illustrates the various components of the rainfall runoff process for the SCS and Horton Methods. The following example serves to demonstrate the difference between the SCS Method, in which the initial abstraction is used, and the

moving curve Horton Method, in which surface depression storage is significant. The incident storm is assumed to be represented by a second quartile Huff curve with a total depth of 50 mm and a duration of 120 minutes. In one case the SCS Method is used with the initial abstraction set at an absolute value of I_a = 6.1 mm. The curve number used is 87.6. Figure 3.9 shows that no runoff occurs until approximately 30 minutes have elapsed at which time the rainfall has satisfied the initial abstraction. From that point, however, the runoff, although small, is finite and continues to be so right to the end of the storm.

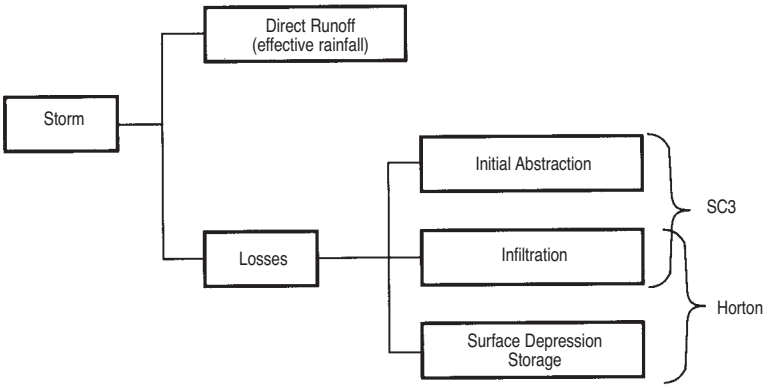

Figure 3.8 Conceptual components of rainfall.

The Horton case is tested using values of f_o = 30 mm/hr, f_c = 10 mm/hr, K = 0.25 hour, and a surface depression storage depth of 5 mm.

These values have been found to give the same volumetric runoff coefficient as the SCS parameters. Figure 3.10 shows that infiltration commences immediately and absorbs all of the rainfall until approximately 30 minutes have elapsed. The initial excess surface water has to fill the surface depression storage which delays the commencement of runoff for a further 13 minutes. After 72 minutes the rainfall intensity is less than f_c and runoff is effectively stopped at that time.

It will be found that the effective rainfall hyetograph generated using the Horton Method has more leading and trailing "zero" elements so that the effective hyetograph is shorter but more intense than that produced using the SCS Method.

ESTABLISHING THE TIME OF CONCENTRATION

Apart from the area and the percentage of impervious surface, one of the most important characteristics of a catchment is the time which must elapse until the entire area is contributing to runoff at the outflow point. This is generally called the Time of Concentration (T_c). This time is comprised of two components:

1) The time for overland flow to occur from a point on the perimeter of the catchment to a natural or artificial drainage conduit or channel.
2) The travel time in the conduit or channel to the outflow point of the catchment.

In storm sewer design, the time of concentration may be defined as the inlet time plus travel time. Inlet times used in sewer design generally vary from 5 to 20 minutes, with the channel flow time being determined from pipe flow equations.

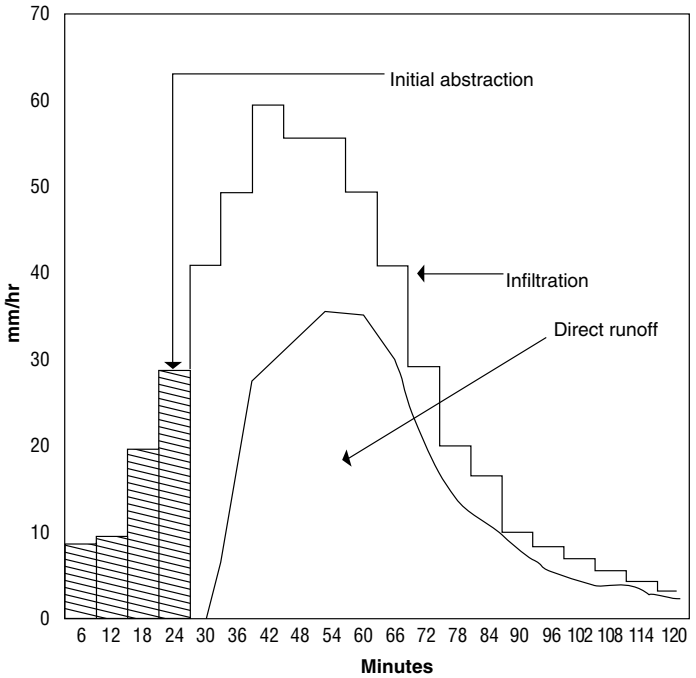

Figure 3.9 SCS Method with I_a = 6.1 mm and CN = 87.6

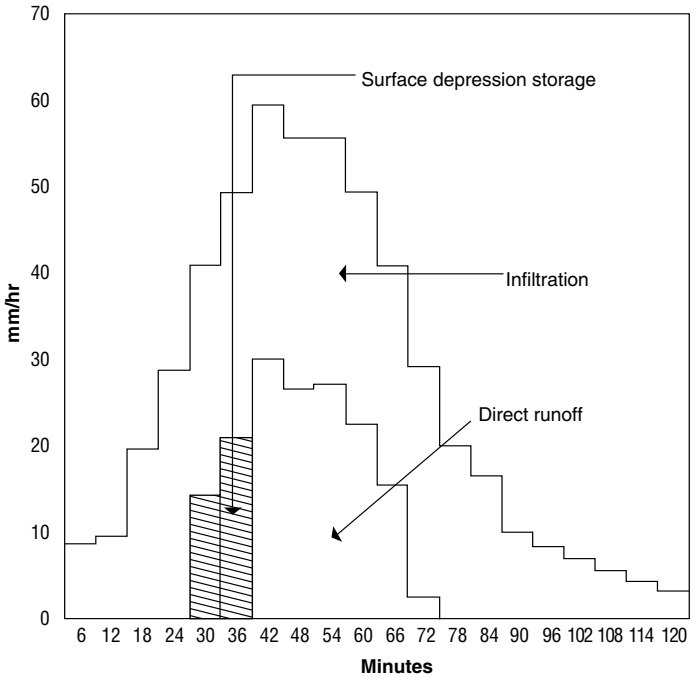

Figure 3.10 Horton equation with f_o = 30 mm, f_c = 10 mm, K = 0.25, and surface depression storage = 5 mm

Factors Affecting Time of Concentration

The time taken for overland flow to reach a conduit or channel depends on a number of factors:

a) Overland flow length (L). This should be measured along the line of longest slope from the extremity of the catchment to a drainage conduit or channel. Long lengths result in long travel times.
b) Average surface slope (S). Since T_c is inversely proportional to S, care must be exercised in estimating an average value for the surface slope.
c) Surface roughness. In general, rough surfaces result in longer travel times and smooth surfaces result in shorter travel times. Therefore, if a Manning equation is used to estimate the velocity of overland flow, T_c will be proportional to the Manning roughness factor (n).
d) Depth of overland flow (y). Very shallow surface flows move more slowly than deeper flows. However, the depth of flow is not a characteristic of the catchment alone but depends on the intensity of the effective rainfall and surface moisture excess.

Several methods of estimating the Time of Concentration are described below. Since it is clear that this parameter has a strong influence on the shape of the runoff hydrograph, it is desirable to compare the value to that obtained from observation, if possible. In situations where sufficient historical data is not available, it may help to compare the results obtained by two or more methods. The impact on the resultant hydrograph, due to using different methods for establishing the time of concentration, should then be assessed.

The Kirpich Formula

This empirical formula relates T_c to the length and average slope of the basin by the equation:

$$T_c = 0.00032\ L^{0.77}\ S^{-0.385}$$ (See Figure 3.11)

where: T_c = time of concentration (hours)
L = maximum length of water travel (m)
S = surface slope, given by H/L (m/m)
H = difference in elevation between the most remote point on the basin and the outlet (m)

From the definition of L and S it is clear that the Kirpich equation combines both the overland flow, or entry time, and the travel time in the channel or conduit. It is, therefore, particularly important that in estimating the drop (H), the slope (S) and ultimately the time of concentration (T_c), an allowance, if applicable, be made for the inlet travel time.

The Kirpich equation is normally used for natural basins with well defined routes for overland flow along bare earth or mowed grass roadside channels. For overland flow on grassed surfaces, the value of T_c obtained should be doubled. For overland flow in concrete channels, a multiplier of 0.2 should be used.

For large watersheds, where the storage capacity of the basin is significant, the Kirpich formula tends to significantly underestimate T_c.

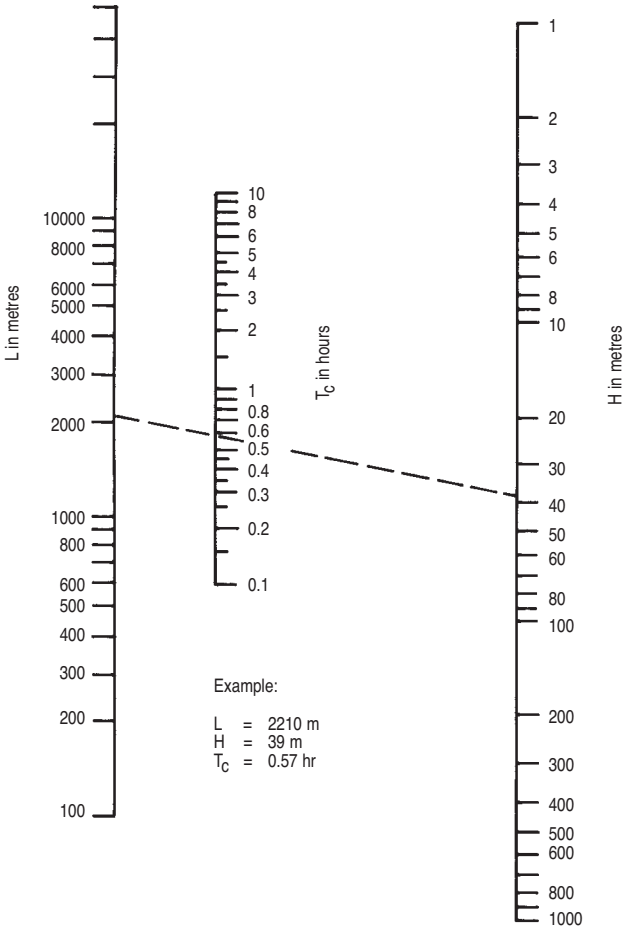

Figure 3.11 T_c nomograph using the Kirpich formula.

The Uplands Method

When calculating travel times for overland flow in watersheds with a variety of land covers, the Uplands Method may be used. This method relates the time of concentration to the basin slope, basin length and type of ground cover. Times are calculated for individual areas, with their summation giving the total travel time.

A velocity is derived using the $V/S^{0.5}$ values from Table 3.9 and a known slope. The time of concentration is obtained by dividing the length by the velocity.

A graphical solution can be obtained from Figure 3.12. However, it should be noted that the graph is simply a log-log plot of the values of $V/S^{0.5}$ given in Table 3.9.

Table 3.9 $V/S^{0.5}$ relationship for various land covers

Land Cover	$V/S^{0.5}$ (m/s)
Forest with heavy ground litter, hay meadow (overland flow)	0.6
Trash fallow or minimum tillage cultivation, contour, strip cropped woodland (overland flow)	1.5
Short grass pasture (overland flow)	2.3
Cultivated, straight row (overland flow)	2.7
Nearly bare and untilled (overland flow) or alluvial fans in Western mountain regions	3.0
Grassed waterway	4.6
Paved areas (sheet flow); small upland gullies	6.1

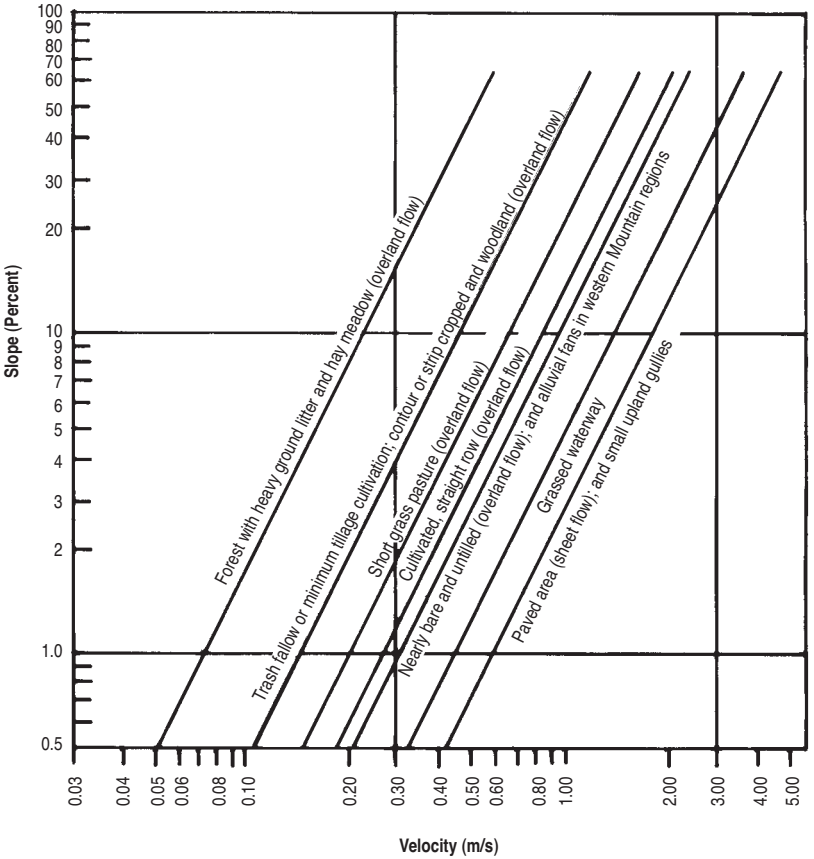

Figure 3.12 Velocities for Upland method for estimating travel time for overland flow.

The Kinematic Wave Method

The two methods described above have the advantage of being quite straightforward and may be used for either simple or more complex methods of determining the runoff. Apart from the empirical nature of the equations, the methods assume that the time of concentration is independent of the depth of overland flow, or more generally, the magnitude of the input. A method in common use, which is more physically based and which also reflects the dependence of T_c on the intensity of the effective rainfall, is the Kinematic Wave Method.

The method was proposed by Henderson to analyze the kinematic wave resulting from rainfall of uniform intensity on an impermeable plane surface or rectangular area. The resulting equation is as follows:

$$T_c = 0.116\ (L \cdot n/S)^{0.6}\ i_{eff}^{-0.4}$$

Where: T_c = time of concentration (hr)
L = length of overland flow (m)
n = Manning's roughness coefficient
S = average slope of overland flow (m/m)
i_{eff} = effective rainfall intensity (mm/hr)

Other Methods

Other methods have been developed which determine T_c for specific geographic regions or basin types. These methods are often incorporated into an overall procedure for determining the runoff hydrograph. Before using any method the user should ensure that the basis on which the time of concentration is determined is appropriate for the area under consideration.

DETERMINATION OF THE RUNOFF HYDROGRAPH

The following sections outline alternative methods for generating the runoff hydrograph, which is the relationship of discharge over time. Emphasis will be given to establishing the hydrograph for single storm events. Methods for estimating flow for urban and rural conditions are given.

Irrespective of the method used, the results should be compared to historical values wherever possible. In many cases, a calibration/validation exercise will aid in the selection of the most appropriate method.

All of the methods described could be carried out using hand calculations. However, for all but the simplest cases the exercise would be very laborious. Furthermore, access to computers and computer models is very economical. For these reasons emphasis will be placed on describing the basis of each method and the relevant parameters. A subsequent section will relate the methods to several computer models.

Rainfall runoff models may be grouped into two general classifications, which are illustrated in Figure 3.13.

One approach uses the concept of effective rainfall, in which a loss model is assumed which divides the rainfall intensity into losses (initial infiltration and depression storage) and effective rainfall. The effective rainfall hyetograph is then used as input to a catchment model to produce a runoff hydrograph. It follows from this approach that infiltration must stop at the end of the storm.

The alternative approach employs a surface water budget in which the infiltration or loss mechanism is incorporated into the catchment model. In this method, the storm rainfall is used as input and the estimation of infiltration and other losses is an integral part of the runoff calculation. This approach implies that infiltration will continue as long as there is excess water on the surface. Clearly, this may continue after the rainfall ends.

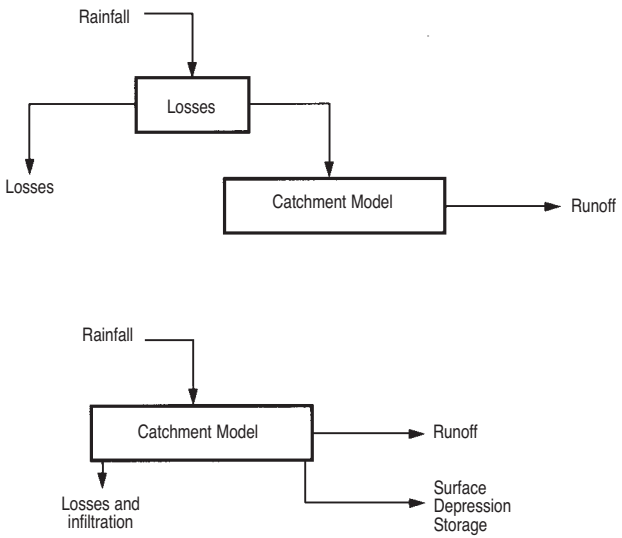

Figure 3.13 Classification of rainfall-runoff models: Effective Rainfall (top) and Surface Water Budget (bottom).

SCS Unit Hydrograph Method

A unit hydrograph represents the runoff distribution over time for one unit of rainfall excess over a drainage area for a specified period of time. This method assumes that the ordinates of flow are proportional to the volume of runoff from any storm of the same duration. Therefore, it is possible to derive unit hydrographs for various rainfall blocks by convoluting the unit hydrograph with the effective rainfall distribution. The unit hydrograph theory is based on the following assumptions:

1. For a given watershed, runoff-producing storms of equal duration will produce surface runoff hydrographs with approximately equivalent time bases, regardless of the intensity of the rain.
2. For a given watershed, the magnitude of the ordinates representing the instantaneous discharge from an area will be proportional to the volumes of surface runoff produced by storms of equal duration.
3. For a given watershed, the time distribution of runoff from a given storm period is independent of precipitation from antecedent or subsequent storm periods.

The U.S. Natural Resource Conservation Service (formerly Soil Conservation Service), based on the analysis of a large number of hydrographs, proposed a unit hydrograph which only requires an estimate of the time to peak (t_p). Two versions

of this unit hydrograph were suggested; one being curvilinear in shape, while the other is a simple asymmetric triangle as shown in Figure 3.14. The SCS has indicated that the two hydrographs give very similar results as long as the time increment is not greater than 0.20 •T_c.

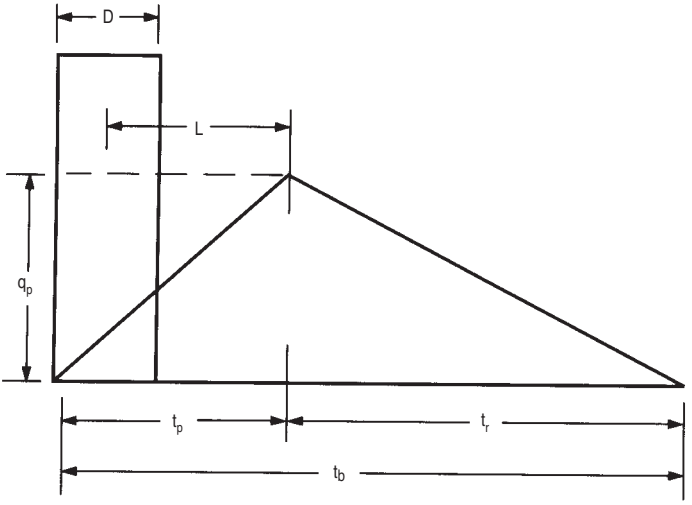

Figure 3.14 SCS triangular unit hydrograph.

The following parameters must be determined to define the triangular unit hydrograph; the time to peak (t_p), the peak discharge corresponding to 1 mm of runoff (q_p), and the base time of the hydrograph (t_b).

Once these parameters are determined, the unit hydrograph can be applied to a runoff depth or to a series of runoff depths. When applied to a series of runoff depths, sub-hydrographs are developed for each and summed to provide an overall hydrograph. A series of runoff depths, for instance, may be a sequence of runoff depths such as those values obtained from a hyetograph where excess rainfall is that portion of the rainfall that is runoff, calculated as the rainfall adjusted to account for retention losses.

The lag time (L) is the delay between the centre of the excess rainfall period (D) and the peak of the runoff (t_p). The SCS has suggested that the lag time, for an average watershed and fairly uniform runoff, can be approximated by:

$$L \approx 0.6\ T_c$$

The estimate of the time to peak (t_p) is therefore affected by the time of concentration (T_c) and the excess rainfall period (D). It is calculated using the relationship:

$$t_p = 0.5\ D + 0.6\ T_c$$

where T_c may be determined by and acceptable method such as those described in the previous section. For a series of runoff depths, where the timestep used is Δt, the

parameter D should be replaced by Δt in the above equation, so that it becomes:

$$t_p = 0.5\ \Delta t + 0.6\ T_c$$

The duration of the recession limb of the hydrograph is assumed to be $t_r = (^5/_3)\ t_p$ so that the time base given by $t_b = (^8/_3)\ t_p$.

The ordinates of the unit hydrograph are expressed in units of discharge per unit depth of runoff. In terms of the notation used in Figure 3.14:

$$q_p = 0.208\ A/t_p$$

where: q_p = peak discharge, m^3/s per mm of runoff
A = catchment area, km^2
t_p = time to peak, hours

The numerical constant in the above equation is a measure of the watershed characteristics. This value varies between about 0.129 for flat marshy catchments and 0.258 for steep flashy catchments. A value of 0.208 is recommended by the SCS for average watersheds.

From the above equation it can be seen that the time to peak (t_p), and therefore the peak discharge of the unit hydrograph (q_p), is affected by the value of the excess rainfall period (D) and, in the case of a series of runoff depths, the timestep used (Δt). Values of D or Δt in excess of 0.25 t_p should not be used as this can lead to the underestimation of the peak runoff.

Rectangular Unit Hydrograph Method

An alternative option to the triangular distribution used in the SCS Method is the rectangular unit hydrograph. Figure 3.15 illustrates the concept of convoluting the effective rainfall with a rectangular unit hydrograph. The ordinate of the unit hydrograph is defined as the area of the unit hydrograph divided by the time of concentration (T_c).

The Rational Method is often used for a rough estimate of the peak flow. This method, which assumes the peak flow occurs when the entire catchment surface is contributing to runoff, may be simulated using a rectangular unit hydrograph. The effective rainfall hydrograph is reduced to a simple rectangular function and $i_{eff} = k \cdot C \cdot i$. The effective rainfall, with duration t_d, is convoluted with a rectangular unit hydrograph which has a base equal to the time of concentration (T_c). If t_d is made equal to T_c, the resultant runoff hydrograph will be symmetrical and triangular in shape with a peak flow given by $Q = k \cdot C \cdot i \cdot A$ and a time base of $t_b = 2\ T_c$. If the rainfall duration (t_d) is not equal to T_c, then the resultant runoff hydrograph is trapezoidal in shape with a time base of $t_b = t_d = T_c$ and a peak flow given by the following equation:

$$Q = k \cdot C \cdot i \cdot A\ (t_d / T_c) \qquad \text{for } t_d \leq T_c$$

$$\text{and}\quad Q = k \cdot C \cdot i \cdot A \qquad \text{for } t_d > T_c$$

This approach makes no allowance for the storage effect due to the depth of overland flow and results in an “instantaneous” runoff hydrograph. This may be appropriate for impervious surfaces in which surface depression storage is negligible, but for pervious or more irregular surfaces it may be necessary to route the instantaneous hydrograph through a hypothetical reservoir in order to more closely represent the runoff hydrograph.

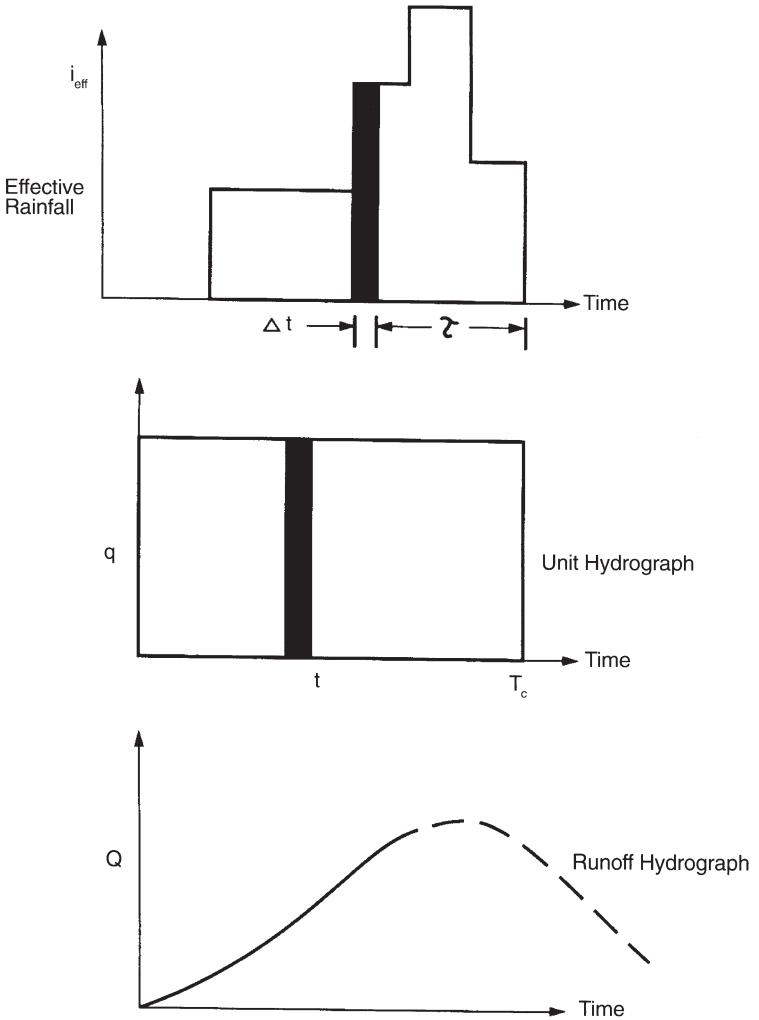

Figure 3.15 Convolution process using a rectangular unit hydrograph.

Linear Reservoir Method

Pederson suggested a more complex response function in which the shape of the unit hydrograph is assumed to be the same as the response of a single linear reservoir to an inflow having a rectangular shape and duration Δt. A linear reservoir is one in which the storage (S) is linearly related to the outflow (Q) by the formula:

$$S = K \cdot Q$$

where: K = the reservoir lag or storage coefficient (hours)

In Pederson's method, the value of K is taken to be 0.5 T_c where T_c is computed from the kinematic wave equation in which the rainfall intensity used is the maximum for the storm being modeled. The use of i_{max} is justified since this intensity tends to dominate the subsequent runoff hydrograph. The resulting unit hydrograph is illustrated in Figure 3.16 and comprises a steeply rising limb, which reaches a maximum at time t = Δt, followed by an exponential recession limb. The two curves can be described by the following equations:

$$q_p = \frac{(1 - e^{-\Delta t/K})}{\Delta t} \quad \text{at } t = \Delta t$$

and,

$$q = q_p \cdot e^{-(t-\Delta t)/K} \quad \text{for } t > \Delta t$$

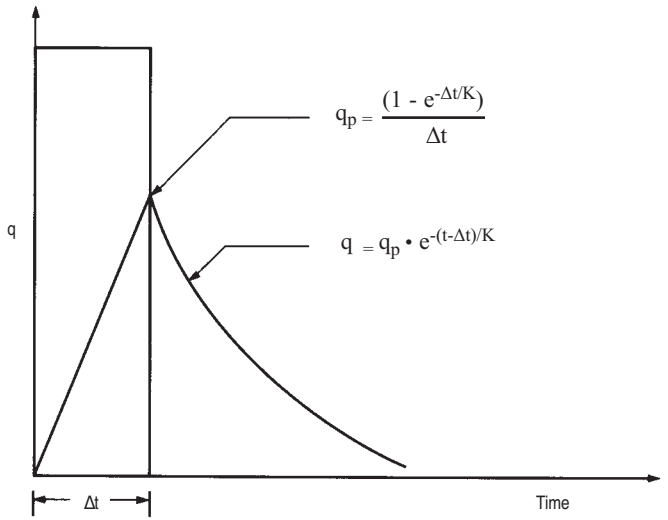

Figure 3.16 The single linear reservoir.

An important feature of the method is that the unit hydrograph always has a time to peak of Δt and is incapable of reflecting different response times as a function of catchment length, slope or roughness. It follows that the peak of the runoff hydrograph will usually be close to the time of peak rainfall intensity irrespective of the catchment characteristics.

SWMM Runoff Algorithm

The Storm Water Management Model was originally developed for the U.S. Environmental Protection Agency in 1971. Since then it has been expanded and improved by the EPA and many other agencies and companies. In particular, the capability for continuous simulation has been included (in addition to the original ability to handle single event simulation), quality as well as quantity is simulated, and snow-melt routines are included in some versions.

The model is intended for use in urban or partly urban catchments. It comprises five main "blocks" of code in addition to an Executive Block or supervisory calling program. Following is a description of the basic algorithm of the Runoff Block, which is used to generate the runoff hydrograph in the drainage system based on a rainfall hyetograph, antecedent moisture conditions, land use and topography.

The method differs from those described above in that it does not use the concept of effective rainfall, but employs a surface water budget approach in which rainfall, infiltration, depression storage and runoff are all considered as processes occurring simultaneously at the land surface. The interaction of these inputs and outputs may be visualized with reference to Figure 3.17.

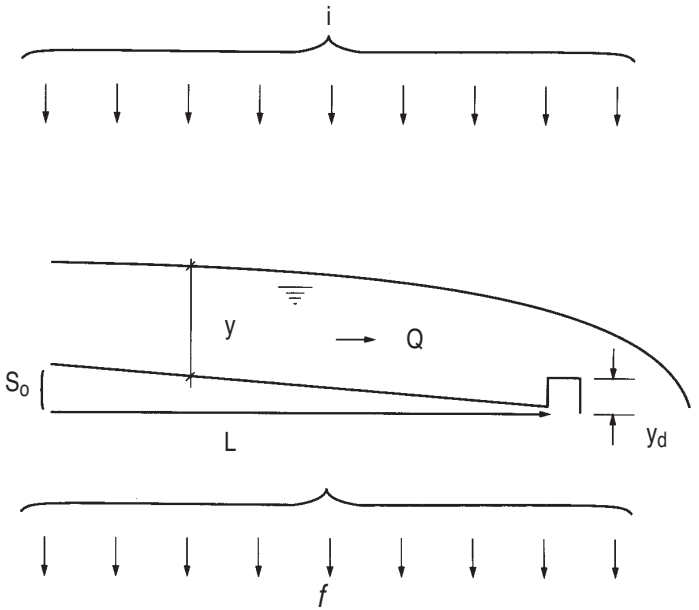

Figure 3.17 Representation of the SWMM/Runoff algorithm.

Treating each sub-catchment as an idealized, rectangular plane surface having a breadth (B) and length (L), the continuity or mass balance equation at the land surface is given by:

Inflow = (Infiltration + Outflow) + Rate of Surface Ponding

That is:

$$i \cdot L \cdot B = (f \cdot L \cdot B + Q) + L \cdot B \cdot (\Delta y/\Delta t)$$

where: i = rainfall intensity
f = infiltration rate
Q = outflow
y = depth of flow over the entire surface

The depth of flow (y) is computed using the Manning equation, taking into account the depth of surface depression storage (y_d) which is also assumed to be uniform over the entire surface. The dynamic equation is given by:

$$Q = B\,(1/n)\,(y-y_d)^{5/3}\,S^{1/2}$$

where: n = Manning's roughness coefficient for overland flow
S = average slope of the overland flow surface

The infiltration rate (f) must be computed using a method such as the 'moving curve' Horton equation or the Green-Ampt model. Infiltration is assumed to occur as long as excess surface moisture is available from rainfall, depression storage or finite overland flow.

It is important to note that the value of Manning's "n" used for overland flow is somewhat artificial (for example, in the range of 0.1 to 0.4) and does not represent a value which might be used for channel flow calculation.

Various methods can be used for the simultaneous solution of the continuity and dynamic equations. One method is to combine the equations into one nondifferential equation in which the depth (y) is the unknown. Once the depth is determined (for instance, by an interactive scheme such as the Newton-Raphson Method) the outflow (Q) follows.

COMPUTER MODELS

Many computer models have been developed for the simulation of the rainfall/runoff process. Table 3.10 lists several of these models and their capabilities.

Table 3.10 Hydrologic computer models

Model Characteristics	HEC-1	HYMO	HSPF	ILLUDAS	MIDUSS	OTTHYMO	QUALHYMO	SCS TR-20	SCS TR-55	SSARR	STANFORD	STORM	SWMM	USDAHL-74
	Models													
Model Type:														
Single Event	●	●		●	●	●		●	●				●	
Continuous			●				●			●	●	●	●	●
Model Components:														
Infiltration	●	●	●	●	●	●	●	●	●	●	●	●	●	●
Evapotranspiration			●							●	●	●	●	●
Snowmelt	●		●							●	●	●	●	●
Surface Runoff	●	●	●	●	●	●	●	●	●	●	●	●	●	●
Subsurface Flow	●		●				●			●	●			●
Reservoir Routing	●	●	●		●	●	●	●	●	●			●	
Channel Routing	●	●	●	●	●	●	●	●	●	●	●		●	
Water Quality			●				●					●	●	
Application:														
Urban Land Use			●	●	●	●	●		●			●	●	
Rural Land Use	●	●	●		●	●	●	●		●	●	●		●
Ease of Use:														
High	●	●		●	●	●	●	●	●			●		●
Low			●							●	●		●	

BIBLIOGRAPHY

Anon., *Drainage Management Manual*, Ministry of Transportation, Ontario, 1997.

AASHTO, *Highway Drainage Guidelines*, Vol. II - Hydrology, American Association of State Highway and Transportation Officials, 444 N. Capitol St., N.W., Ste. 249, Washington, D.C. 20001, 1999.

ASCE, "Design and Construction of Sanitary and Storm Sewers," American Society of Civil Engineers, 1986.

Gray, D. M., *Handbook on the Principles of Hydrology*, National Research Council of Canada,1970.

Maidman, D. R., *Handbook of Hydrology*, McGraw-Hill, Inc., 1993.

NRCS, "Computer Program for Project Formulation - Hydrology," Technical Release No.20, U.S. Natural Resource Conservation Service (formerly Soil Conservation Service), 1965.

NRCS, "Urban Hydrology for Small Watershed," Technical Release No.55, U.S. Natural Resource Conservation Service (formerly Soil Conservation Service), 1975.

NRCS, *National Engineering Handbook*, Section 4, Hydrology, U.S. Natural Resource Conservation Service (formerly Soil Conservation Service), 1972.

Rowney, A. C., Wisner, P. E., "QUALHYMO Users Manual," Release 1.0, Department of Civil Engineering, University of Ottawa, Ottawa, Ontario, 1984.

Smith, A. A., "Microcomputer Interaction Design of Urban Stormwater Systems (MIDUSS)," Users Manual, Version, 4.2, Dundas, Ontario, 1987.

Spangler, M.G. and Handy, R.L, *Soil Engineering*, 4th Ed., Harper and Row Publishers, 1982.

U.S. Army, "Hydrologic Analysis with HEC-1 on the Personal Computer" Hydrologic Engineering Center, U.S. Army Corps of Engineers, Davis, California, 1994.

CHAPTER 4

HYDRAULICS

INTRODUCTION

Many millions of dollars are spent annually on culverts, storm drains and subdrains, all vital to the protection of streets, highways and railroads. If inadequately sized, they can jeopardize the roadway and cause excessive property damage and loss of life. Over design means extravagance. Engineering can find an economical solution.

Topography, soil and climate are extremely variable, so drainage sites should be designed individually from reasonably adequate data for each particular site. In addition, the designer is advised to consult with those responsible for maintaining drainage structures in the area. One highway engineer comments:

"With the exception of the riding qualities of the traveled way, no other single item requires as much attention on the part of maintenance personnel as highway culverts. Many of the problems of culvert maintenance stem from the fact that designers in all too many instances consider that culverts will be required to transport only clear water. This is a condition hardly ever realized in practice, and in many instances storm waters may be carrying as much as 50 percent detrimental material. A rapid change in grade line at the culvert entrance can cause complete blockage of the culvert. This results in overflow across the highway and in some cases, especially where high fills are involved, the intense static pressure results in loss of the embankment."

HYDRAULICS OF OPEN DRAINAGE CHANNELS

General

Before designing culverts, storm sewers and other drainage structures, one should consider the design of ditches, gutters, chutes, median swales, and other channels leading to these structures. (See Figure 4.1).

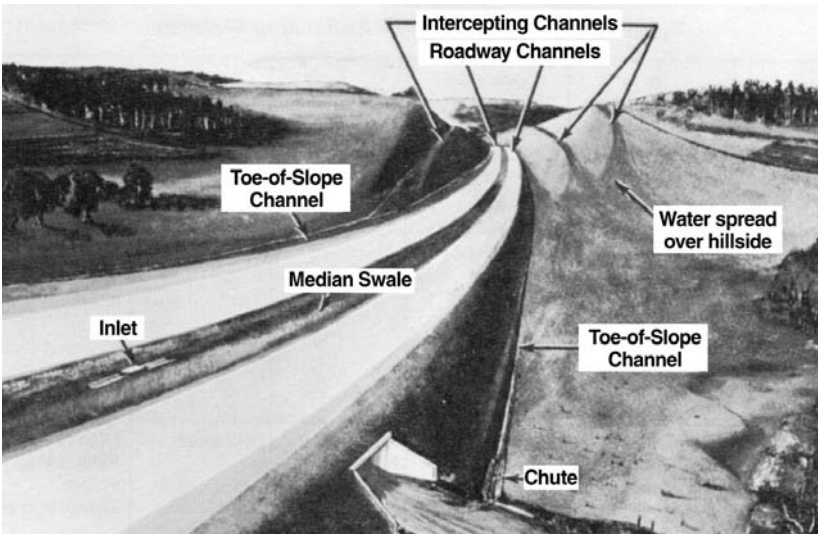

Figure 4.1 Types of roadside drainage channels.

The design engineer with needs beyond the scope of this handbook may refer to the CSPI publication, “Modern Sewer Design” and AISI “Design Charts for Open Channel Flow”. These include numerous examples of calculations and references on all aspects of the subject.

Rainfall and runoff, once calculated, are followed by the design of suitable channels to handle the peak discharge with minimum erosion, maintenance and hazard to traffic.

The AASHTO publication "A Policy on Geometric Design of Highway and Streets" states: "The depth of channels should be sufficient to remove the water without saturation of the pavement subgrade. The depth of water that can be tolerated, particularly on flat channel slopes, depends upon the soil characteristics. In open country, channel side slopes of 5:1 or 6:1 are preferable in order to reduce snow drifts."

Systematic maintenance is recognized as essential to any drainage channel and therefore should be considered in the design of those channels.

Chezy Equation

Chezy developed a basic hydraulic formula for determining the flow of water, particularly in open channels. It is as follows:

$$Q = AV$$

if: $$V = c\sqrt{RS}$$

then: $$Q = Ac\sqrt{RS}$$

where:
- Q = discharge, m^3/s
- A = cross-sectional area of flow, m^2
- V = mean velocity of flow, m/s
- c = coefficient of roughness, depending upon the surface over which water is flowing, $m^{1/2}/s$
- R = hydraulic radius, m $= \dfrac{A}{WP}$
- WP = wetted perimeter (length of wetted contact between water and its containing channel), m
- S = slope, or grade, m/m

This fundamental formula is the basis of most capacity formulas.

Manning’s Equation

Manning’s equation, published in 1890, gives the value of c in the Chezy formula as:

$$c = \frac{R^{1/6}}{n}$$

where: n = coefficient of roughness (see Tables 4.1 and 4.2)

Table 4.1 Manning's *n* for constructed channels

Type of channel and description	*n*
1. LINED OR BUILT-UP	
A. Concrete - Trowel Finish	0.013
B. Concrete - Float Finish	0.015
C. Concrete - Unfinished	0.017
D. Gunite - Good Section	0.019
E. Gravel Bottom with sides of:	
1) Formed Concrete	0.020
2) Random Stone in Mortar	0.023
3) Dry Rubble or Rip Rap	0.033
2. EXCAVATED OR DREDGED - EARTH	
A. Straight and Uniform	
1) Clean, Recently Completed	0.018
2) Clean, After Weathering	0.022
3) Gravel, Uniform Section, Clean	0.025
4) With Short Grass, Few Weeds	0.027
B. Winding and Sluggish	
1) No Vegetation	0.025
2) Grass, Some Weeds	0.030
3) Dense Weeds, Deep Channels	0.035
4) Earth Bottom and Rubble Sides	0.030
5) Stony Bottom and Weedy Banks	0.035
6) Cobble Bottom and Clean Sides	0.040
3. CHANNELS NOT MAINTAINED, WEEDS & BRUSH UNCUT	
A. Dense Weeds, High as Flow Depth	0.080
B. Clean Bottom, Brush on Sides	0.050
C. Same, Highest Stage of Flow	0.070
D. Dense Brush, High Stage	0.100

Table 4.2 Manning's *n* for natural stream channels
Surface width at flood stage less than 30 m

1. Fairly regular section:	
a. Some grass and weeds, little or no brush	0.030–0.035
b. Dense growth of weeds, depth of flow materially greater than weed height	0.035–0.05
c. Some weeds, light brush on banks	0.035–0.05
d. Some weeds, heavy brush on banks	0.05–0.07
e. Some weeds, dense willows on banks	0.06–0.08
f. For trees within channel, with branches submerged at high stage, increase all above values by	0.01–0.02
2. Irregular sections, with pools, slight channel meander; increase values given above about	0.01–0.02
3. Mountain streams, no vegetation in channel, banks usually steep, trees and brush along banks submerged at high stage:	
a. Bottom of gravel, cobbles, and few boulders	0.04–0.05
b. Bottom of cobbles, with large boulders	0.05–0.07

The complete Manning equation is:

$$V = \frac{R^{2/3}S^{1/2}}{n}$$

Combining this with the Chezy Equation results in the equation:

$$Q = \frac{AR^{2/3}S^{1/2}}{n}$$

In many calculations, it is convenient to group the channel cross section properties in one term called conveyance, K, so that:

$$K = \frac{AR^{2/3}}{n}$$

Then:

$$Q = KS^{1/2}$$

Uniform flow of clean water in a straight unobstructed channel would be a simple problem but is rarely attained. Manning's formula gives reliable results if the channel cross section, roughness, and slope are fairly constant over a sufficient distance to establish uniform flow.

The Use of Charts and Tables

While design charts for open-channel flow reduce computational effort, they cannot replace engineering judgment and a knowledge of the hydraulics of open-channel flow and flow through conduits with a free water surface.

Design charts contain the channel properties (area and hydraulic radius) of many channel sections and tables of velocity for various combinations of slope and hydraulic radius. Their use is explained in the following examples.

Example 1

Given: A trapezoidal channel of straight alignment and uniform cross section in earth with a bottom width of 0.6 m, side slopes at 1:1, a channel slope of 0.003 m/m, and a normal depth of water of 0.3 m.

Find: Velocity and discharge.

Solution:

1. Based on Table 4.1, for an excavated channel in ordinary earth, n is taken as 0.022.
2. Cross-sectional area, A, is 0.27 m^2 [0.3 * (0.6 + 1 * 0.3)].
3. Wetted perimeter, WP, is 1.449 m [0.6 + 2 * 0.3 * $(1^2+1)^{1/2}$].
4. Hydraulic radius, R, is 0.186 m [0.27 / 1.449].
5. Using the nomograph in Figure 4.2, lay a straight edge between the outer scales at the values of S = 0.003 and n = 0.02. Mark where the straight edge intersects the turning line.
6. Place the straight edge to line up the point on the turning line and the hydraulic radius of 0.186 m.
7. Read the velocity, V, of 0.80 m/s on the velocity scale.
8. Discharge, Q, is 0.216 m^3/s [0.27 * 0.89].

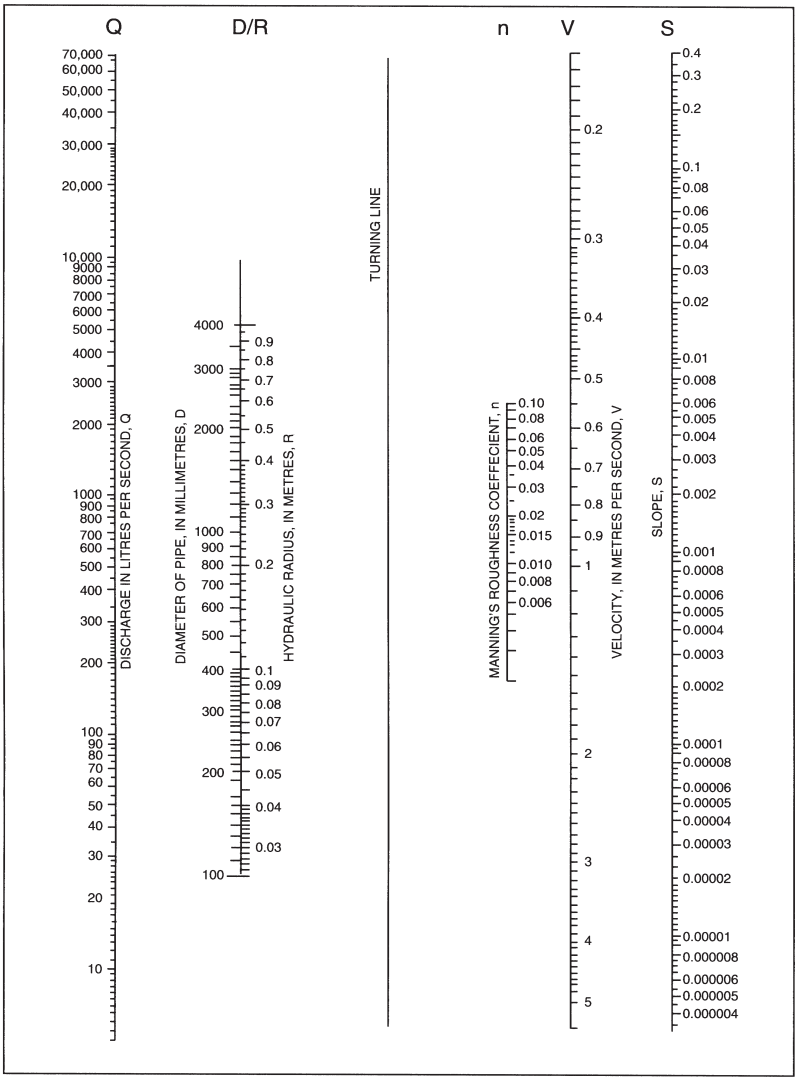

Alignment chart for energy loss in pipes, for Manning's formula.
Note: Use chart for flow computations, $H_L = S$

Figure 4.2 Nomograph for solution of Manning's equation.

Figure 4.3 provides the means to calculate a trapezoidal channel capacity for a specific bottom width, channel slope, side slope, n value and a variety of flow depths. For a given drainage project, these variables are known or determined using known site parameters through trial and error. The flow rate, Q, can then be calculated.

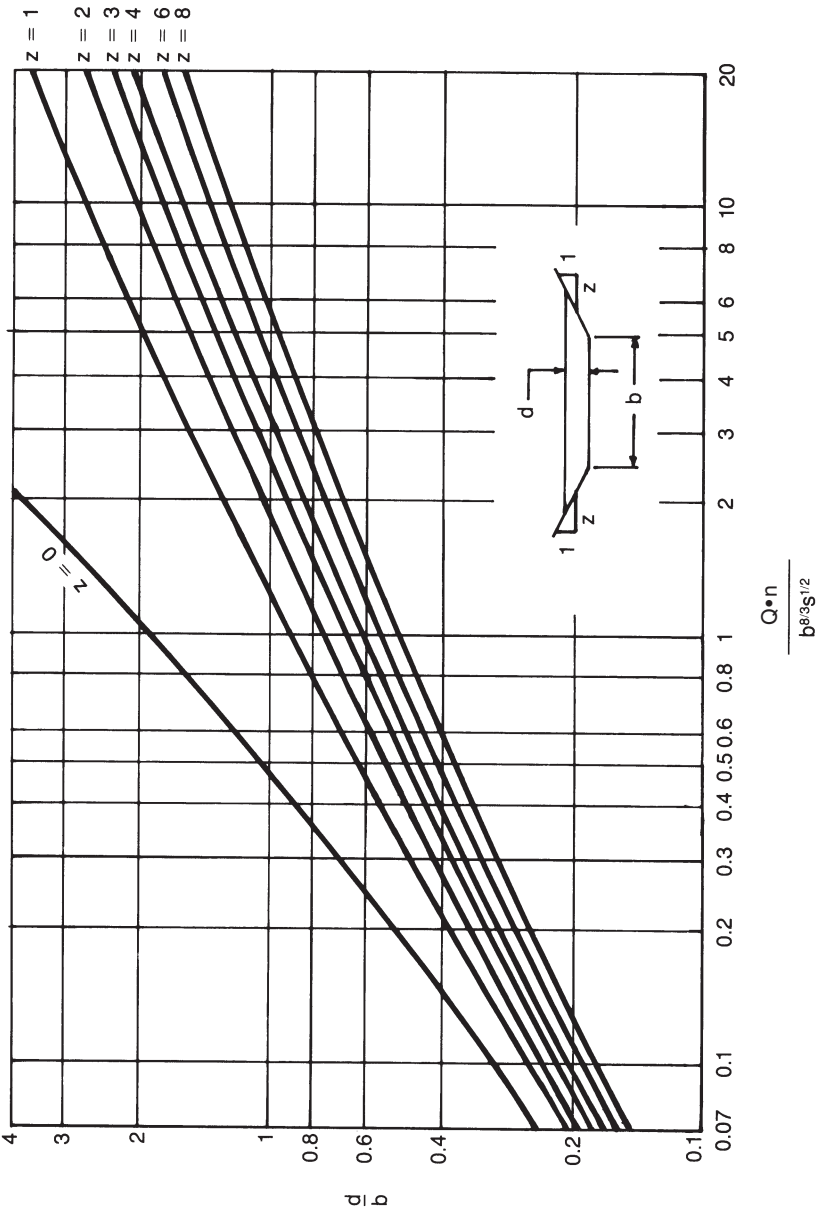

Figure 4.3 Capacity of trapezoidal channel.

Example 2

Given: Bottom width, b = 6.1 m
Side slopes @ 2:1, so z = 2
Roughness coefficient, n = 0.030 (from Table 4.2 for grass and weeds, no brush)
Channel slope, S = 0.002 m/m

Depth to width ratio, $\frac{d}{b} = 0.6$ (flood stage depth)

Find: Depth of flow, d, and flow rate, Q.

Solution:

Depth, d = 0.6 (6.1) = 3.66 m

From Figure 4.3: $\frac{Q \cdot n}{b^{8/3}\, S^{1/2}} = 0.62$

So: $\frac{Q\,(0.030)}{(6.1)^{8/3}\,(0.002)^{1/2}} = 0.62$

And: $Q = 114.8\ m^3/s$

If the resulting design is not satisfactory, the channel parameters are adjusted and the design calculations are repeated.

Safe Velocities

The ideal situation is one where the velocity will cause neither silt deposition nor erosion. For the design of a channel, the approximate grade can be determined from a topographic map, from the plan profiles, or from both.

To prevent the deposition of sediment, the minimum gradient for earth and grass-lined channels should be about 0.5 percent and that for smooth paved channels about 0.35 percent.

Convenient guidelines for permissible velocities are provided in Tables 4.3 and 4.4. More comprehensive design data may be found in the U.S. FHWA's HEC 15 (Design of Stable Channels with Flexible Linings).

Channel Protection

Corrugated steel flumes or chutes (and pipe spillways) are favored solutions for channel protection especially in wet, unstable or frost susceptible soils. They should be anchored to prevent undue shifting. This will also protect against buoyancy and uplift, which can occur especially when empty. Cutoff walls or collars are used to prevent undermining.

If the mean velocity exceeds the permissible velocity for the particular type of soil, the channel should be protected from erosion. Grass linings are valuable where grass growth can be supported. Ditch bottoms may be sodded or seeded with the aid of temporary quick growing grasses, mulches, or erosion control blankets. Grass may also be used in combination with other, more rigid types of linings, where the grass is on the upper bank slopes and the rigid lining is on the channel bottom. Linings may consist of stone which is dumped, hand placed or grouted, preferably laid on a filter blanket of gravel or crushed stone and a geotextile.

Table 4.3 Comparison of limiting water velocities and tractive force values for the design of stable channels (straight channels after aging; channel depth = 1m)

Material	n	For Clear Water		Water Transporting Colloidal Silts	
		Velocity, m/s	Tractive Force, Pa	Velocity, m/s	Tractive Force, Pa
Fine sand colloidal	0.020	0.46	1.29	0.76	3.59
Sandy loam noncolloidal	0.020	0.53	1.77	0.78	3.59
Silt loam noncolloidal	0.020	0.61	2.30	0.91	5.27
Alluvial silts noncolloidal	0.020	0.61	2.30	1.07	7.18
Ordinary firm loam	0.020	0.76	3.59	1.07	7.18
Volcanic ash	0.020	0.76	3.59	1.07	7.18
Stiff clay very colloidal	0.025	1.14	12.45	1.52	22.02
Alluvial silts colloidal	0.025	1.14	12.45	1.52	22.02
Shales and hardpans	0.025	1.83	32.08	1.83	32.08
Fine gravel	0.020	0.76	3.59	1.52	15.32
Graded loam to cobbles when non-colloidal	0.030	1.14	18.19	1.52	31.60
Graded silts to cobbles when colloidal	0.030	1.22	20.59	1.68	38.30
Coarse gravel non-colloidal	0.025	1.22	14.36	1.83	32.08
Cobbles and shingles	0.035	1.52	43.57	1.68	52.67

Table 4.4 Maximum permissible velocities in vegetal-lined channels[d]

Cover Average, Uniform Stand, Well Maintained	Slope Range	Permissible Velocity[a]	
		Erosion Resistant Soils	Easily Eroded Soils
	Percent	m/s	m/s
Bermudagrass	0 -5 5-10 over 10	2.44 2.13 1.83	1.83 1.52 1.22
Buffalograss Kentucky bluegrass Smooth brome Blue grama	0-5 5-10 over 10	2.13 1.83 1.52	1.52 1.22 0.91
Grass mixture[b]	0 -5 5 -10	1.52 1.22	1.22 0.91
Lespedeza sericea Weeping lovegrass Yellow bluestem Kudzu Alfalfa Crabgrass	0 -5	1.07	0.76
Common lespedeza[b] Sudangrass[b]	0-5[c]	1.07	0.76

a From "Handbook of Channel Design for Soil and Water Conservation:' Soil Conservation Service SCS-TP-61, Revised June 1954

b Annuals-used on mild slopes or as temporary protection until permanent covers are established.

c Use on slopes steeper than 5 percent is not recommended.

d Data for this table is a composite of data from several reference sources.

Asphalt and concrete lined channels are used for steep erodible channels.

Ditch checks are an effective means of decreasing the velocity and thereby the erodability of the soil.

High velocities, where water discharges from a channel, must be considered and provisions must be made to dissipate the excess energy.

HYDRAULICS OF CULVERTS

Introduction

Culvert design has not yet reached the stage where two or more individuals will always arrive at the same answer, or where actual service performance matches the designer's expectation. The engineer's interpretation of field data and hydrology is often influenced by personal judgement, based on experience in a given locality. However, hydrology and hydraulic research are closing the gap to move the art of designing a culvert closer to becoming a science.

Up to this point, the design procedure has consisted of (1) collecting field data, (2) compiling facts about the roadway, and (3) making a reasonable estimate of flood discharge. The next step is to design an economical corrugated steel structure to handle the flow (including debris) with minimum damage to the slope or culvert barrel. Treatment of the inlet and outlet ends of the structure must also be considered.

Improving hydraulic capacity (inlet control) with special features.

What Makes a Good Culvert?

An ASCE Task Force on Hydraulics of Culverts offers the following recommendations for "Attributes of a Good Highway Culvert":

1. The culvert, appurtenant entrance and outlet structures should properly take care of water, bed-load, and floating debris at all stages of flow.
2. It should cause no unnecessary or excessive property damage.
3. Normally, it should provide for transportation of material without detrimental change in flow pattern above and below the structure.

4. It should be designed so that future channel and highway improvement can be made without too much loss or difficulty.
5. It should be designed to function properly after fill has caused settlement.
6. It should not cause objectionable stagnant pools in which mosquitoes may breed.
7. It should be designed to accommodate increased runoff occasioned by anticipated land development.
8. It should be economical to build, hydraulically adequate to handle design discharge, structurally durable and easy to maintain.
9. It should be designed to avoid excessive ponding at the entrance which may cause property damage, accumulation of drift, culvert clogging, saturation of fills, or detrimental upstream deposits of debris.
10. Entrance structures should be designed to screen out material which will not pass through the culvert, reduce entrance losses to a minimum, make use of the velocity of approach in so far as practicable, and by use of transitions and increased slopes, as necessary, facilitate channel flow entering the culvert.
11. The design of the culvert outlet should be effective in re-establishing tolerable non-erosive channel flow within the right-of-way or within a reasonably short distance below the culvert.

CSP structure ready for backfill placement and headwalls.

12. The outlet should be designed to resist undermining and washout.
13. Energy dissipaters, if used, should be simple, easy to build, economical and reasonably self-cleaning during periods of easy flow.

Design Method

The culvert design process should strive for a balanced result. Pure fluid mechanics should be combined with practical considerations to help assure satisfactory performance under actual field conditions. This includes due consideration of prospective maintenance and the handling of debris.

The California Division of Highways uses an excellent method of accomplishing this; one that has worked well for many years. Other jurisdictions have used similar approaches. California culvert design practice establishes the following:

Criteria for Balanced Design:
The culvert shall be designed to discharge

a) a 10 year flood without static head at the entrance, and
b) a 100 year flood utilizing the available head at the entrance.

This approach lends itself well to most modern design processes and computer programs. It provides a usable rationale for determining a minimum required waterway area.

The permissible height of water at the inlet controls hydraulic design. This should be determined and specified for each site based on the following considerations:

1. Risk of overtopping the embankment and the resulting risk to human life.
2. Potential damage to the roadway, due to saturation of the embankment, and pavement disruption due to freeze-thaw.
3. Traffic interruptions.
4. Damage to adjacent or upstream property, or to the channel or flood plain environment.
5. Intolerable discharge velocities, which can result in scour and erosion.
6. Deposition of bed load and/or clogging by debris on recession of flow.

Flow Conditions and Definitions

Culverts considered here are circular pipes and pipe-arches with a uniform barrel cross-section throughout.

There are two major types of culvert flow conditions:

Inlet Control – A culvert flowing in inlet control is characterized by shallow, high velocity flow categorized as supercritical. Inlet control flow occurs when the culvert barrel is capable of conveying more flow than the inlet will accept. The control section is near the inlet, and the downstream pipe and flow have no impact on the amount of flow through the pipe. Under inlet control, the factors of primary importance are (1) the cross-sectional area of the barrel, (2) the inlet configuration or geometry, and (3) the headwater elevation or the amount of ponding upstream of the inlet (see Figure 4.4). The barrel slope also influences the flow under inlet control, but the effect is small and it can be ignored.

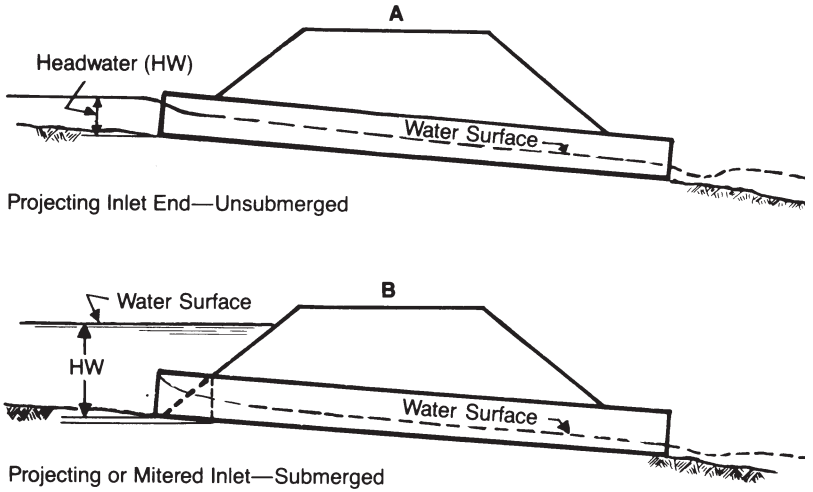

Figure 4.4 Inlet control flow regimes.

Outlet Control – A culvert flowing in outlet control is characterized by relatively deep, lower velocity flow categorized as subcritical. Outlet control flow occurs when the culvert barrel is not capable of conveying as much flow as the inlet opening will accept. The control section is at the outlet of the culvert. In addition to the factors considered for inlet control, factors that must be considered for outlet control include (1) the tailwater elevation in the outlet channel, (2) the barrel slope, (3) the barrel roughness, and (4) the length of the barrel (see Figure 4.5).

Hydraulics of Culverts in Inlet Control

Inlet control means that the discharge capacity is controlled at the entrance by the headwater depth, cross-sectional area and type of inlet edge. The roughness, length, and outlet conditions are not factors in determining the culvert capacity.

Sketches A and B in Figure 4.4 show unsubmerged and submerged projecting inlets. Inlet control performance is classified by these two regions (unsubmerged flow and submerged flow) as well as a transition region between them.

Entrance loss depends upon the geometry of the inlet edge and is expressed as a fraction of the velocity head. Research with models and prototype testing have resulted in coefficients for various types of inlets, as shown in Table 4.5 and Figure 4.6.

Table 4.5 **Entrance loss coefficients for corrugated steel pipe or pipe-arch**

Inlet End of Culvert	Entrance Type	Coefficient, k_e
Projecting from fill (no headwall)	1	0.9
Mitered (bevelled) to conform to fill slope	2	0.7
Headwall or headwall and wingwalls square-edge	3	0.5
End-Section conforming to fill slope	4	0.5
Headwall rounded edge	5	0.2
Bevelled Ring	6	0.25

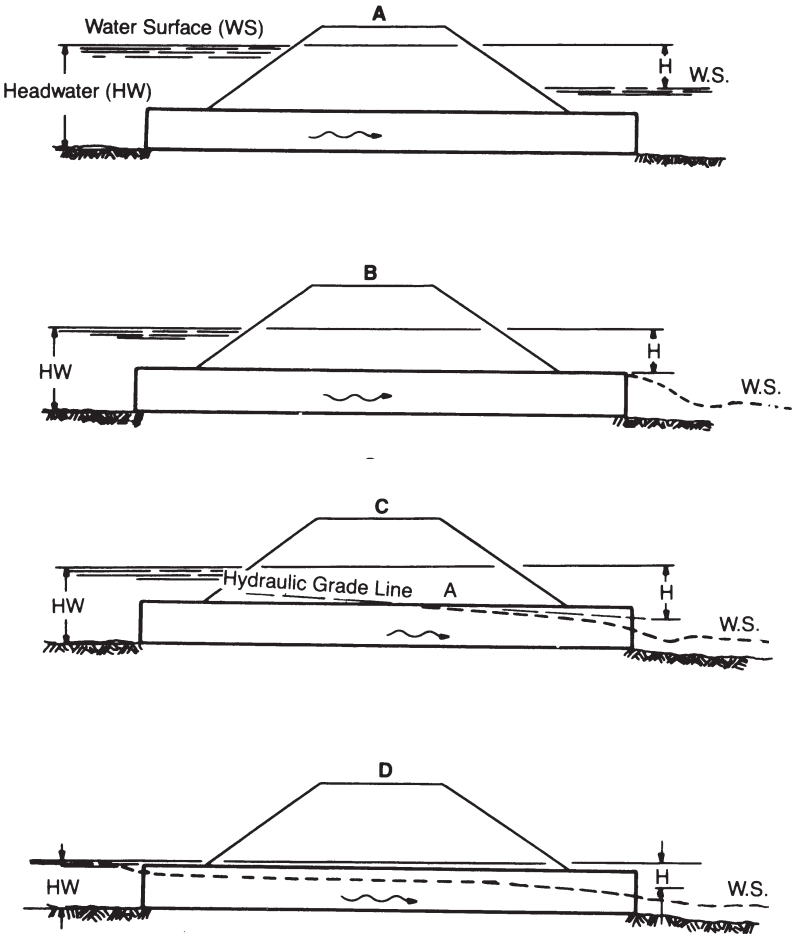

Figure 4.5 Outlet control flow regimes.

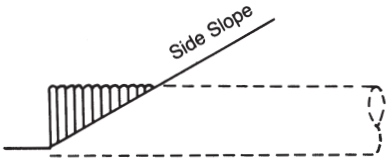

Type 1 Projecting

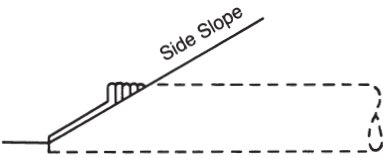

Type 2 Bevel

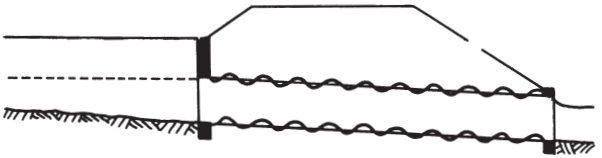

Type 3 Headwall–Square Edge

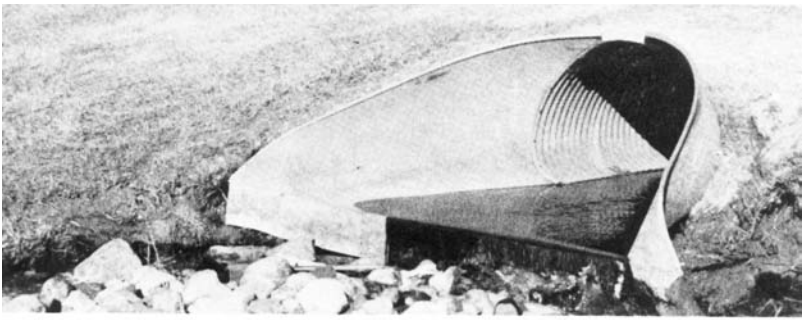

Type 4 End Section

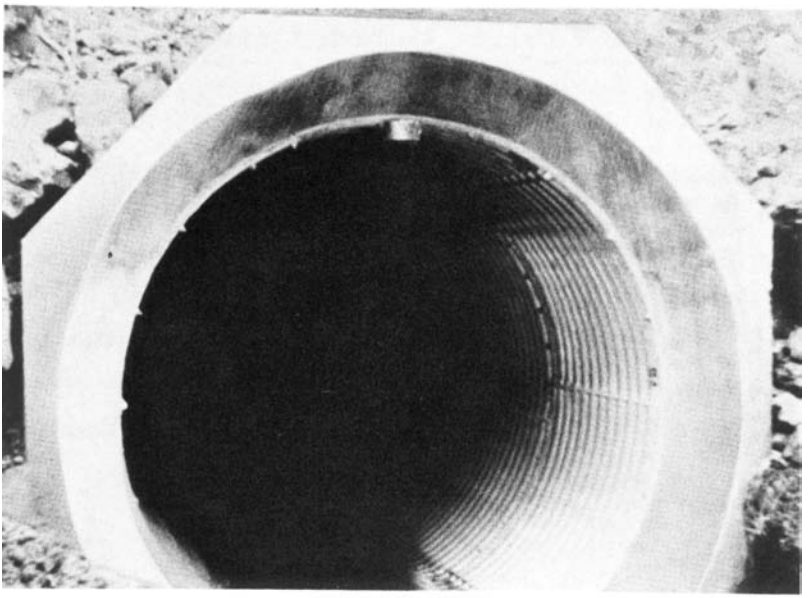

Type 6 Bevelled Ring

Figure 4.6 Typical inlet entrances.

The model testing and prototype measurements also provide information used to develop equations for unsubmerged and submerged inlet control flow. The transition zone is poorly defined, but it is approximated by plotting the two flow equations and connecting them with a line which is tangent to both curves. These plots, done for a variety of structure sizes, are the basis for constructing the design nomographs included in this handbook.

In the nomographs, the headwater depth, HW, is the vertical distance from the culvert invert (bottom) at the entrance to the energy grade line of the headwater pool. It, therefore, includes the approach velocity head. The velocity head tends to be relatively small and is often neglected. The resulting headwater depth is therefore conservative and the actual headwater depth would be slightly less than the calculated value. If a more accurate headwater depth is required, the approach velocity head should be subtracted from the headwater depth determined using the nomographs.

Hydraulics of Culverts in Outlet Control

Outlet control means that the discharge capacity is controlled at the outlet by the tailwater depth or critical depth, and it is influenced by such factors as the slope, wall roughness and length of the culvert. The following energy balance equation contains the variables that influence the flow through culverts flowing under outlet control:

$$L \cdot S_o + HW + \frac{V_1^2}{2g} = h_o + H + \frac{V_2^2}{2g}$$

where:
- L = length of culvert, m
- S_o = slope of barrel, m/m
- HW = headwater depth, m
- V_1 = approach velocity, m/s
- g = gravitational constant = 9.806 m/s^2
- h_o = outlet datum, m
- H = head, m
- V_2 = downstream velocity, m/s

The headwater depth, HW, is the vertical distance from the culvert invert at the entrance (where the entrance is that point in the pipe where there is the first full cross-section) to the surface of the headwater pool.

As discussed under inlet control hydraulics, the water surface and energy grade line are usually assumed to coincide at the entrance (the approach velocity head is ignored). The same can be said for the downstream velocity head. That being the case, the approach velocity head and downstream velocity head terms in the above equation would be dropped and the equation would take the form below. Note that this equation has been organized to provide the resulting headwater depth.

$$HW = h_o + H - L \cdot S_o$$

The head, or energy (Figures 4.5 through 4.9), required to pass a given quantity of water through a culvert flowing in outlet control, is made up of a (1) entrance loss, (2) friction loss, and (3) exit loss.

This energy is expressed in equation form as:

$$H = H_e + H_f + H_o$$

where:
- H_e = entrance loss, m
- H_f = friction loss, m
- H_o = exit loss, m

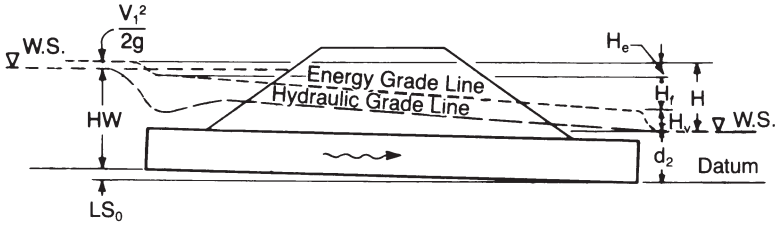

Figure 4.7 Difference between energy grade line and hydraulic grade line.

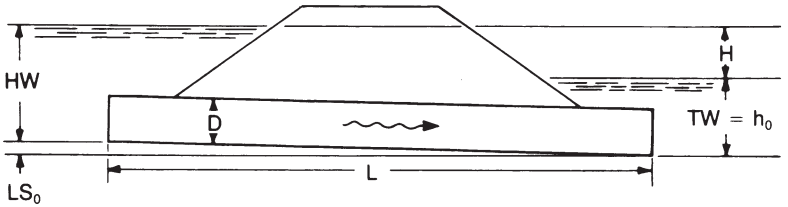

Figure 4.8 Relationship of headwater to high tailwater.

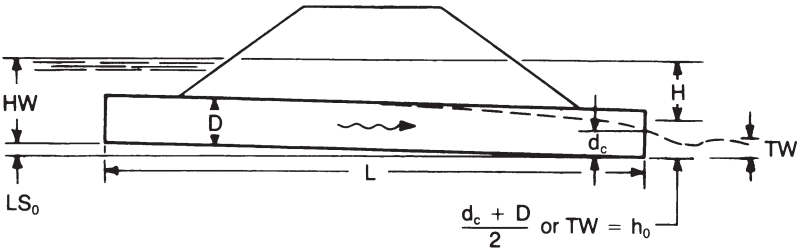

Figure 4.9 Relationship of headwater to low tailwater.

The hydraulic slope, or hydraulic grade line, sometimes called the pressure line, is defined by the elevations to which water would rise in small vertical pipes attached to the culvert wall along its length (see Figure 4.7). For full flow, the energy grade line and hydraulic grade line are parallel over the length of the barrel except in the vicinity of the inlet where the flow contracts and re-expands. The difference between the energy grade line and hydraulic grade line is the velocity head. It turns out that the velocity head is a common variable in the expressions for entrance, friction and exit loss.

The velocity head is expressed by the following equation:

$$H_v = \frac{V^2}{2g}$$

where: H_v = velocity head, m
V = mean velocity of flow in the barrel, m/s = $\frac{Q}{A}$
Q = design discharge, m^3/s
A = cross sectional area of the culvert, m^2

The entrance loss depends upon the geometry of the inlet. This loss is expressed as an entrance loss coefficient multiplied by the velocity head, or:

$$H_e = k_e \frac{V^2}{2g}$$

where: k_e = entrance loss coefficient (Table 4.5)

The friction loss is the energy required to overcome the roughness of the culvert barrel and is expressed by the following equation:

$$H_f = \left\{ \frac{2gn^2L}{R^{1.33}} \right\} \frac{V^2}{2g}$$

where: n = Manning's friction factor (see Tables 4.6 and 4.7)

R = hydraulic radius, m = $\frac{A}{WP}$

WP = wetted perimeter, m

Table 4.6 **Values of Manning's *n* for corrugated and spiral rib steel pipe**

	Annular 68 x 13 mm	Helical								
		38 x 6.5 mm		68 x 13 mm						
	All Diameters	200	250	300	400	500	600	900	1200	1400 & Larger
Unpaved	0.024	0.012	0.011	0.013	0.014	0.015	0.016	0.018	0.020	0.021
25 % Paved	0.021						0.014	0.017	0.020	0.019
Fully Paved	0.012						0.012	0.012	0.012	0.012
	Annular 76 x 25 mm All Diameters	Helical-76 x 25 mm								
		1200	1400	1600	1800	2000	2200 & Larger			
Unpaved	0.027	0.023	0.023	0.024	0.025	0.026	0.027			
25 % Paved	0.023	0.020	0.020	0.021	0.022	0.022	0.023			
Fully Paved	0.012	0.012	0.012	0.012	0.012	0.012	0.012			
	Annular 125 x 25 mm All Diameters	Helical-125 x 25 mm								
		1400	1600	1800	2000 & Larger					
Unpaved	0.025	0.022	0.023	0.024	0.025					
25 % Paved	0.022	0.019	0.020	0.021	0.022					
Fully Paved	0.012	0.012	0.012	0.012	0.012					

Spiral Rib Pipe - all diameters Manning's n = .013

Note: ** When helically corrugated steel pipe is used for air conduction, the Darcy-Weisbach Formula with other values of F (or n) is used.

Combination stream crossing and voids to reduce dead load on foundation soils. (Ontario Ministry of Transportation project.)

Table 4.7 **Values of Manning's *n* for 152 mm x 51 mm corrugation structural plate pipe**

	Diameters			
	1500 mm	2120 mm	3050 mm	4610 mm
Plain-unpaved	0.033	0.032	0.030	0.028
25 % Paved	0.028	0.027	0.026	0.024

The exit loss depends on the change in velocity at the outlet of the culvert. For a sudden expansion, the exit loss is expressed as:

$$H_o = 1.0 \left[\frac{V^2}{2g} - \frac{V_2^2}{2g} \right]$$

As discussed previously, the downstream velocity head is usually neglected, in which case the above equation becomes the equation for the velocity head:

$$H_o = H_v = \frac{V^2}{2g}$$

Substituting in the equation for head we get (for full flow):

$$H = \left\{ k_e + \frac{2gn^2L}{R^{1.33}} + 1 \right\} \frac{V^2}{2g}$$

Nomographs have been developed and can be used for solving this equation. Note that these nomographs provide the head, whereas the inlet control nomographs provide the headwater depth. The head is then used to calculate the headwater depth by solving the preceding equation for HW (including the terms of h_o and $L \bullet S_o$).

This equation was developed for the full flow condition, which is as shown in Figure 4.5 A. It is also applicable to the flow condition shown in Figure 4.5 B.

Backwater calculations are required for the partly full flow conditions shown in Figure 4.5 C and D. These calculations begin at the downstream water surface and proceed upstream to the entrance of the culvert and the headwater surface. The downstream water surface is based on the greater of the critical depth or the tailwater depth.

The backwater calculations can be tedious and time consuming. Approximate methods have therefore been developed for the analysis of partly full flow conditions. Backwater calculations have shown that a downstream extension of the full flow hydraulic grade line, for the flow condition shown in Figure 4.5 C, intersects the plane of the culvert outlet cross section at a point half way between the critical depth and the top of the culvert. This is more easily envisioned as shown in Figure 4.9. It is possible, then, to begin the hydraulic grade line at that datum point and extend the straight, full flow hydraulic grade line to the inlet of the culvert. The slope of the hydraulic grade line is the full flow friction slope:

$$S_n = \frac{H_f}{L} = \left\{ \frac{2gn^2}{R^{1.33}} \right\} \frac{V^2}{2g}$$

If the tailwater elevation exceeds the datum point described above, the tailwater depth is used instead as the downstream starting point for the full flow hydraulic grade line.

The headwater depth is calculated by adding the inlet losses to the elevation of the hydraulic grade line at the inlet.

This approximate method works best when the culvert is flowing full for at least part of its length, as shown in Figure 4.5 C. If the culvert is flowing partly full for its whole length, as shown in Figure 4.5 D, the results become increasingly inaccurate as the flow depth decreases. The results are usually acceptable down to a headwater depth of about three quarters of the structure rise. For lower headwater depths, backwater calculations are required.

The outlet control nomographs can by used with the approximate method. In this case, the head is added to the datum point elevation to obtain the headwater depth. This method also works best when the culvert is flowing full for part of its length, and the results are not as accurate for a culvert flowing partly full.

Research on Values of n for Helically Corrugated Steel Pipe

Tests conducted on helically corrugated steel pipe, both round and pipe arch flowing full and part full, demonstrate a lower coefficient of roughness compared to annularly corrugated steel pipe. The roughness coefficient is a function of the corrugation helix angle (angle subtended between corrugation direction and centerline of the corrugated steel pipe), which determines the helically corrugated pipe diameter. A small helix angle associated with small diameter pipe, correlates to a lower roughness coefficient. Similarly, as the helix angle increases with diameter, the roughness coefficient increases, approaching the value associated with annularly corrugated pipe.

Values for 125 x 25 mm corrugations have been based on tests conducted using 152 x 25 mm and subsequently modified for the shorter pitch. Most published values of the coefficient of roughness, n, are based on experimental work conducted under controlled laboratory conditions using clear or clean water. The test pipe lines are straight with smooth joints. However, design values should take into account the actual construction and service conditions which can vary greatly for different drainage materials. Also, as noted on preceding pages, culvert or storm drain capacity under inlet control flow conditions is not affected by the roughness of pipe material.

Field Studies on Structural Plate Pipe

Model studies by the U.S. Corps of Engineers, and analyses of the results by the U.S. Federal Highway Administration, have been the basis for friction factors of structural plate pipe for many years. These values, originally shown in the 1967 edition of this Handbook, ranged from 0.0328 for 1500 mm diameter pipe to 0.0302 for 4610 mm pipe.

In 1968, the first full-scale measurements were made on a 457 m long 4300 mm diameter structural plate pipe line in Lake Michigan. These measurements indicated a lower friction factor than those derived from the model studies. As a result, the recommended values of Manning's n for structural plate pipe of 3050 mm diameter and larger have been modified as shown in Table 4.7. The values for the smaller diameters remain as they were.

HYDRAULIC COMPUTATIONS

A balanced design approach establishes a minimum opening required to pass a 10 year flood with no ponding.

The 10 year discharge is established from hydrology data. The pipe size required to carry this flow, with no head at the entrance (HW/D = 1.0), is determined from nomographs. The designer uses the 10 year discharge to determine the pipe size required for inlet control and for outlet control, and uses whichever is greater. This is typically the minimum required opening size for the culvert.

Inlet Control

The headwater, HW, for a given pipe flowing under inlet control can be determined from Figures 4.10 through 4.16. Note that these figures are for arches as well as round pipes and pipe-arches.

These figures are first used to determine the pipe size required so that there is no head at the entrance under a 10 year flood condition. Once a pipe size is chosen, the designer also checks that pipe to determine whether outlet control will govern (as described below), and makes pipe size adjustments accordingly.

The designer then uses the selected pipe size to determine the headwater (for specific entrance conditions) for the 100 year flood discharge under inlet control. If this amount of headwater is acceptable, the chosen size is satisfactory for the full 100 year design discharge under inlet control. If the resulting headwater is too high, a larger size must be selected based on the maximum permissible headwater.

The values from the nomographs give the headwater in terms of a number of pipe rises (HW/D). The following formula is used to calculate the headwater depth:

$$HW_i = \frac{HW}{D} \bullet D$$

where: HW_i = headwater depth under inlet control, m

$\frac{HW}{D}$ = headwater depth in number of pipe rises, from nomograph, m/m

D = diameter of pipe, or rise of arch or pipe-arch, m

Outlet Control

Figures 4.17 through 4.24 are used, with the pipe size selected for inlet control, to determine the head loss, H. The head loss is then used in the following equation to determine the headwater depth under outlet control. If the depth computed for outlet control is greater than the depth determined for inlet control, then outlet conditions govern the flow conditions of the culvert and the higher headwater depth applies.

$$HW_o = h_o + H - L \bullet S_o$$

where: HW_o = headwater depth under outlet control, m

h_o = outlet datum, m; the greater of the tailwater depth, TW, or $\frac{(d_c + D)}{2}$

H = head, from nomograph, m

L = length of culvert barrel, m

S_o = slope of culvert barrel, m/m

TW = depth of flow in channel at culvert outlet, m

d_c = critical depth, from Figures 4.25 through 4.28, m

D = diameter of pipe, or rise of arch or pipe-arch, m

Wall roughness factors (Manning's n), on which the nomographs are based, are stated on each figure. In order to use the nomographs for other values of n, an adjusted value for length, L', is calculated using the formula below. This value is then used on the length scale of the nomograph, rather than the actual culvert length.

$$L' = L \bullet \left(\frac{n'}{n}\right)^2$$

where L' = adjusted length for use in nomographs, m
L = actual length, m
n' = actual value of Manning's n
n = value of Manning's n on which nomograph is based

Values of Manning's n for standard corrugated steel pipe, which were reported in Table 4.6, are shown for convenience in Table 4.8, together with the corresponding length adjustment factors, $\left(\frac{n'}{n}\right)^2$.

Table 4.8 **Length adjustment factors for corrugated steel pipe**

Pipe Diameter or span, mm	Roughness Factor n for Helical Corr.*	Length Adjustment Factor $\left(\frac{n'}{n}\right)^2$
300	0.013	0.29
600	0.016	0.44
900	0.018	0.56
1200	0.020	0.70
1400 & Larger	0.021	0.77

* Other values of roughness, n, are applicable to paved pipe, lined pipe, pipe with 76 x 25 and 125 x 25 corrugations, and spiral rib pipe. See Table 4.6.

Values of Manning's n for structural plate corrugated steel pipe, which were determined in the 1968 full-scale field measurements and which were reported in Table 4.7, are shown for convenience in Table 4.9, together with the corresponding length adjustment factors, $\left(\frac{n'}{n}\right)^2$.

Table 4.9 **Length adjustment factors for 152 mm x 51 mm corrugation structural plate pipe**

Pipe Diameter, mm	Roughness Factor		Length Adjustment Factor $\left(\frac{n'}{n}\right)^2$
	Curves based on n =	Actual n' =	
1500	0.0328	0.033	1.0
2120	0.0320	0.032	1.0
3050	0.0311	0.030	0.93
4920	0.0302	0.028	0.86
Pipe-arch Size, mm	**Roughness Factor**		**Length Adjustment Factor $\left(\frac{n'}{n}\right)^2$**
	Curves based on n =	Actual n' =	
2060 x 1520	0.0327	0.033	1.0
2590 x 1880	0.0321	0.032	1.0
3400 x 2010	0.0315	0.030	0.91
5050 x 3330	0.0306	0.028	0.84

An appropriate entrance loss curve is used based on the desired entrance condition. Typical values of the entrance loss coefficient, k_e, for a variety of inlet configurations, are in Table 4.5.

If outlet control governs the capacity of the culvert and the headwater exceeds the maximum allowable value, a larger size pipe can be selected so that an acceptable headwater depth results. In such a case, corrugated steel structures with lower roughness coefficients should be considered. See Table 4.6 for alternatives. A smaller size of paved pipe, a helical pipe or a spiral rib pipe may be satisfactory.

Entrance conditions should also be considered. It may be economical to use a more efficient entrance than originally considered if a pipe size difference results. This can be easily investigated by checking the pipe capacity using other entrance loss coefficient curves.

Improved Inlets

Culvert capacity may be increased through the use of special inlet designs. The U.S. Federal Highway Administration (FHWA) has developed design methods for these types of structures. While these designs increase the flow, their use has been limited as a result of their cost and the level of knowledge of designers.

Hydraulic Nomographs

The inlet and outlet control design nomographs which appear in this handbook (Figures 4.10 through 4.24) were reproduced from nomographs developed and published by the FHWA. A certain degree of error is introduced into the design process due to the fact that the construction of nomographs involves graphical fitting techniques resulting in scales which do not exactly match equation results. All of the nomographs used in this handbook have a precision which is better that ±10 percent of the equation value in terms of headwater depth (inlet control) or head loss (outlet control). This degree of precision is usually acceptable, especially when considering the degree of accuracy of the hydrologic data. If a structure size is not shown on a particular nomograph, accuracy is not drastically affected when a user interpolates between known points.

Hydraulic Programs

Numerous computer programs now exist to aid in the design and analysis of highway culverts. These programs possess distinct advantages over traditional hand calculation methods. The increased accuracy of programmed solutions represents a major benefit over the inaccuracies inherent in the construction and use of tables and nomographs. In addition, programmed solutions are less time consuming. This feature allows the designer to compare alternative sizes and inlet configurations very rapidly so that the final culvert selection can be based on economics. Interactive capabilities in some programs can be utilized to change certain input parameters or constraints and analyze their effects on the final design. Familiarity with culvert hydraulics and the traditional analytical methods provides a solid basis for designers to take advantage of the speed, accuracy, and increased capabilities available in culvert hydraulics programs.

Most programs analyze the performance of a given culvert, although some are capable of design. Generally, the desired result of either type of program is to obtain a culvert design which satisfies hydrologic needs and site conditions by considering both inlet and outlet control. Results usually include the barrel size, inlet dimensions, headwater depth, outlet velocity, and other hydraulic data. Some programs are capable of analyzing side-tapered and slope-tapered inlets. The analysis or design of the barrel size can be for one barrel only or for multiple barrels.

Some programs may contain features such as backwater calculations, performance curves, hydrologic routines, and capabilities for routing based on upstream storage considerations.

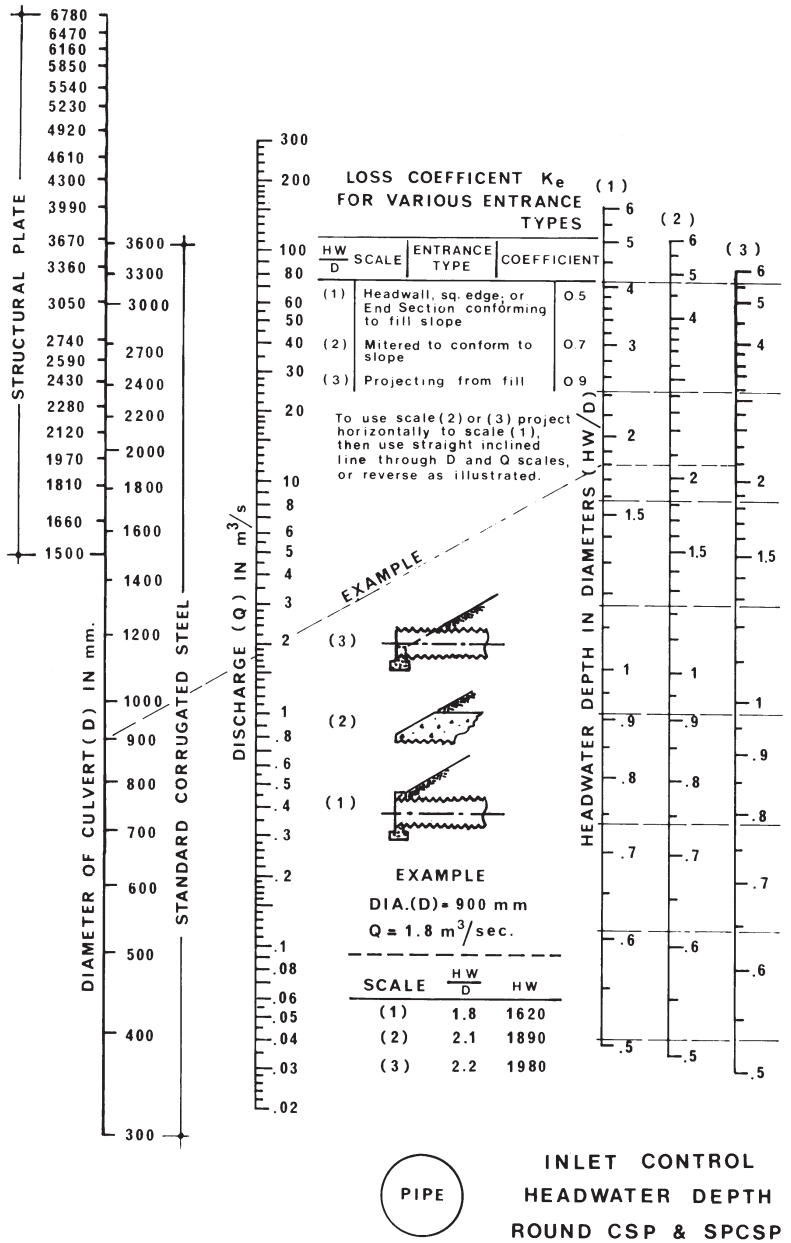

Figure 4.10 Headwater depth for round corrugated steel pipe and structural plate corrugated steel pipe under inlet control.

$\frac{b}{D}$	$\frac{a}{D}$	$\frac{c}{D}$	$\frac{d}{D}$	ENTRANCE TYPE
0.042	0.063	0.042	0.083	A
0.083	0.125	0.042	0.125	B

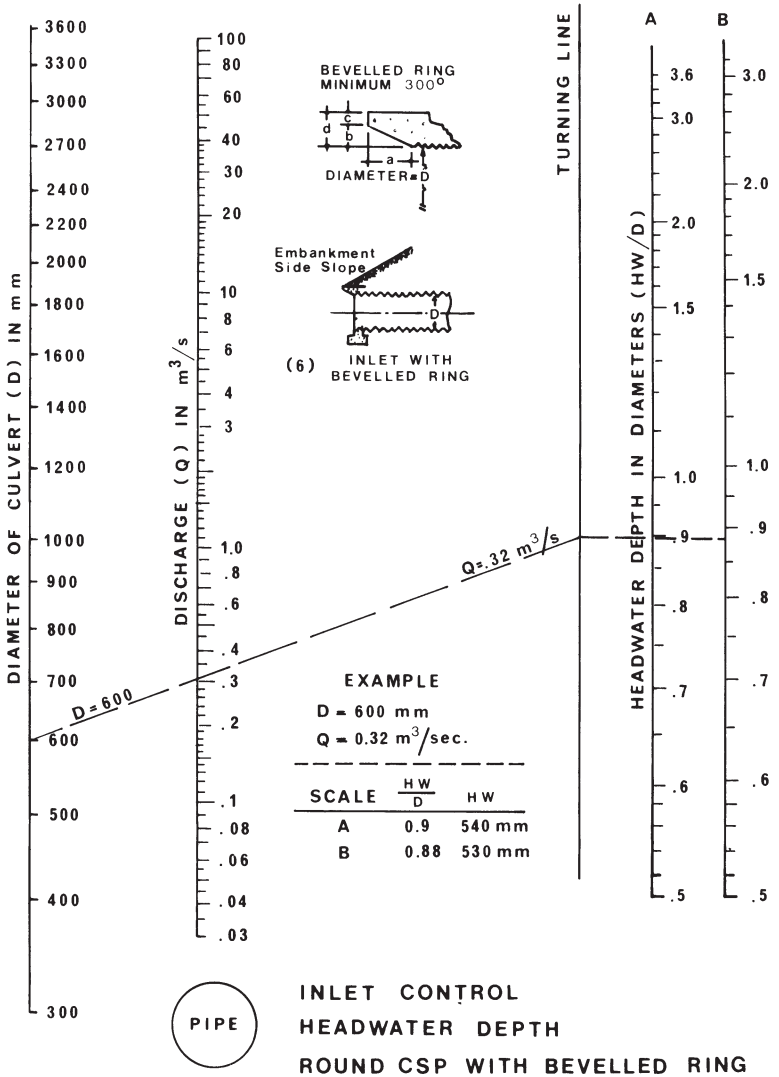

Figure 4.11 Headwater depth for round corrugated steel pipe with bevelled ring headwall under inlet control.

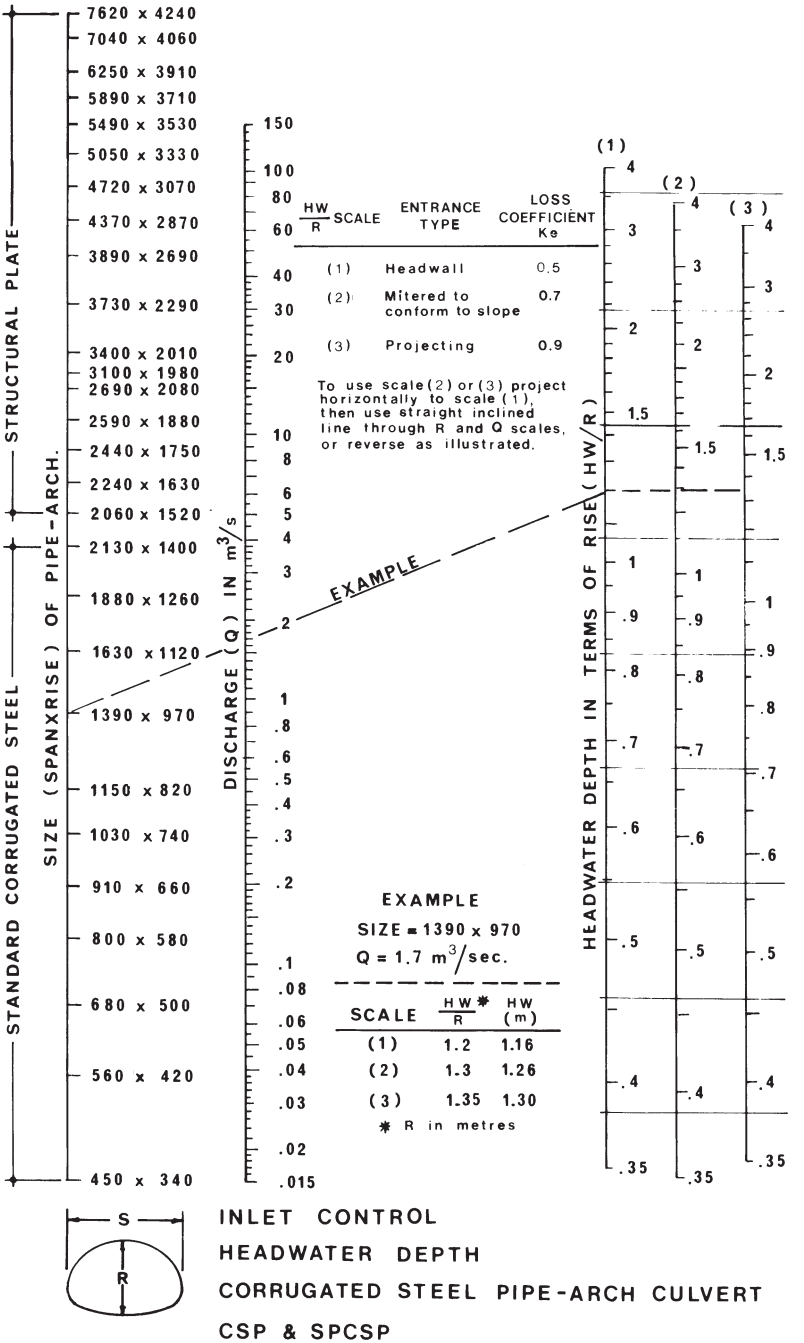

Figure 4.12 Headwater depth for corrugated steel and structural plate corrugated steel pipe-arch under inlet control.

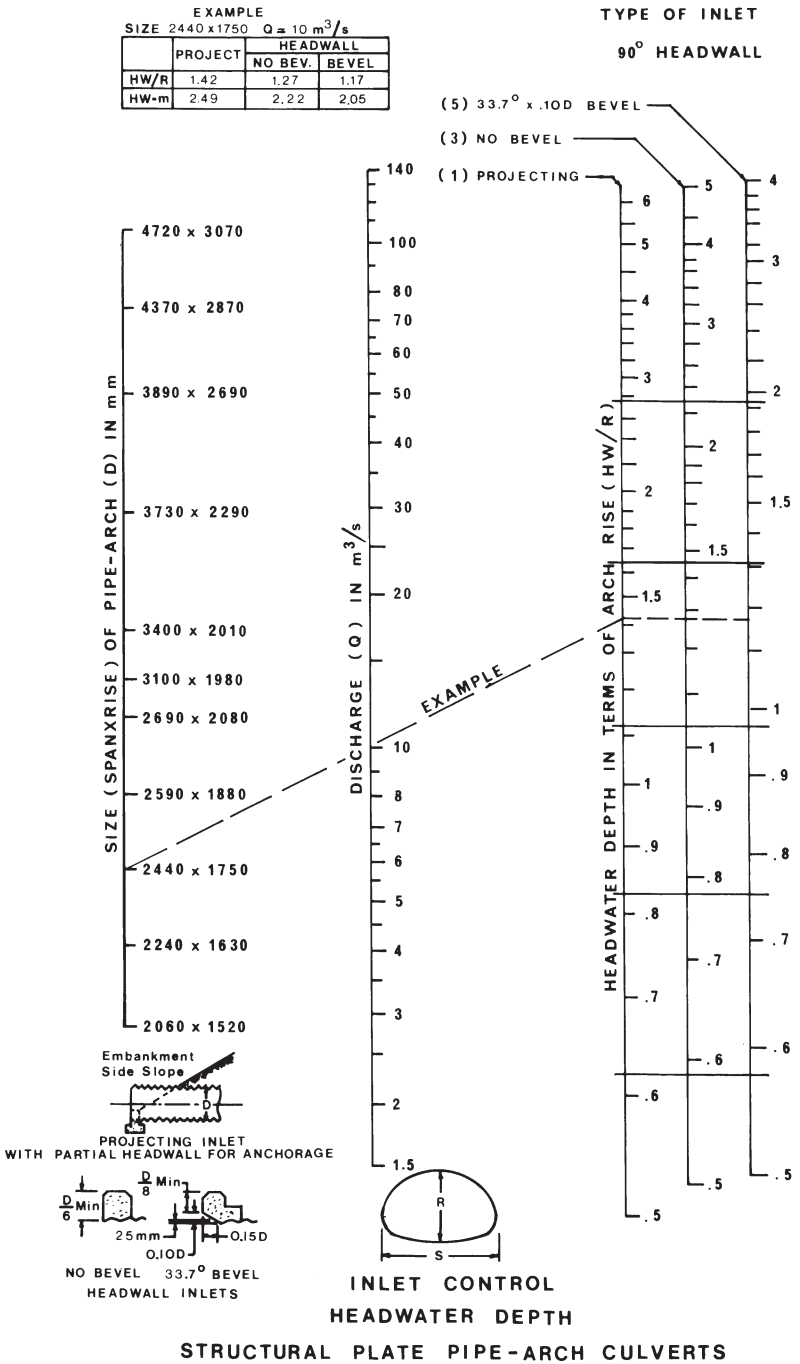

Figure 4.13 Headwater depth for structural plate corrugated steel pipe-arch under inlet control (size range: up to 4720 mm x 3070 mm).

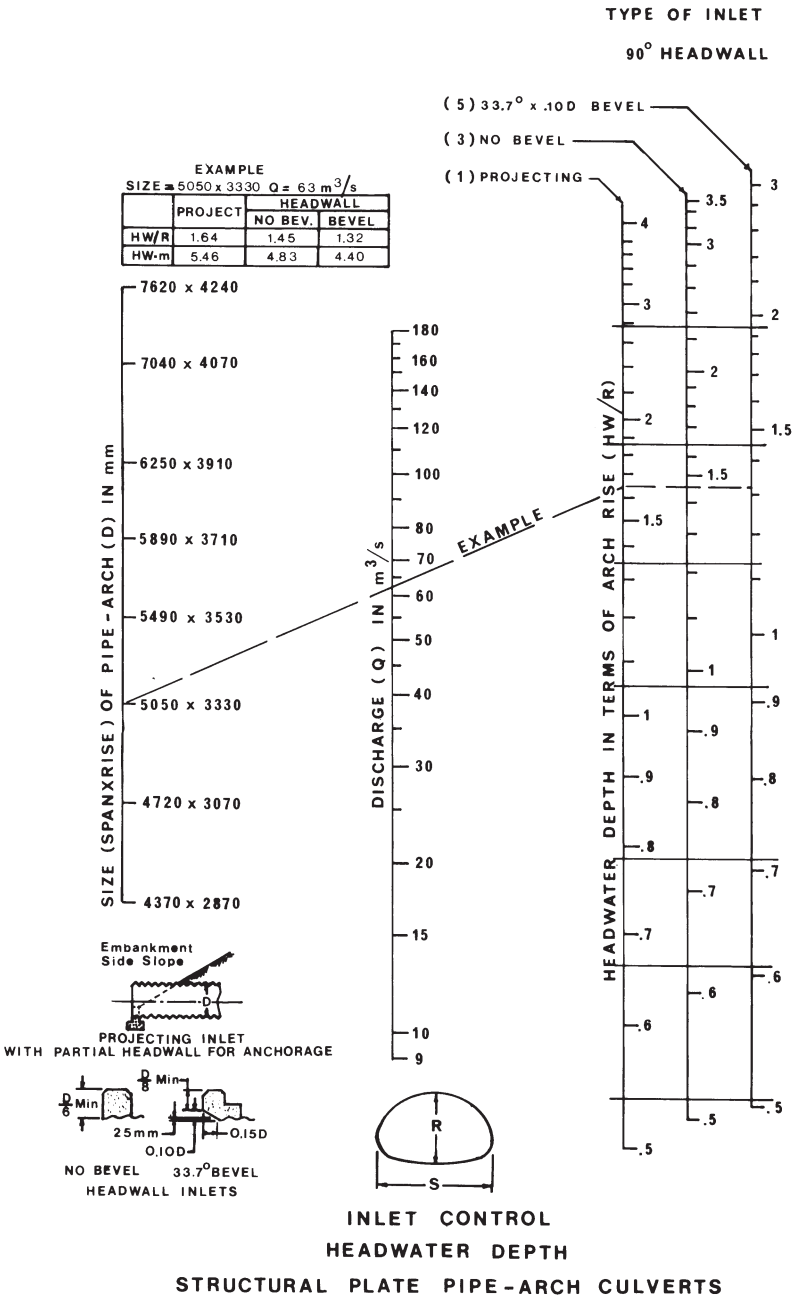

Figure 4.14 Headwater depth for structural plate corrugated steel pipe-arch under inlet control (size range: 4370 mm x 2870 mm and over).

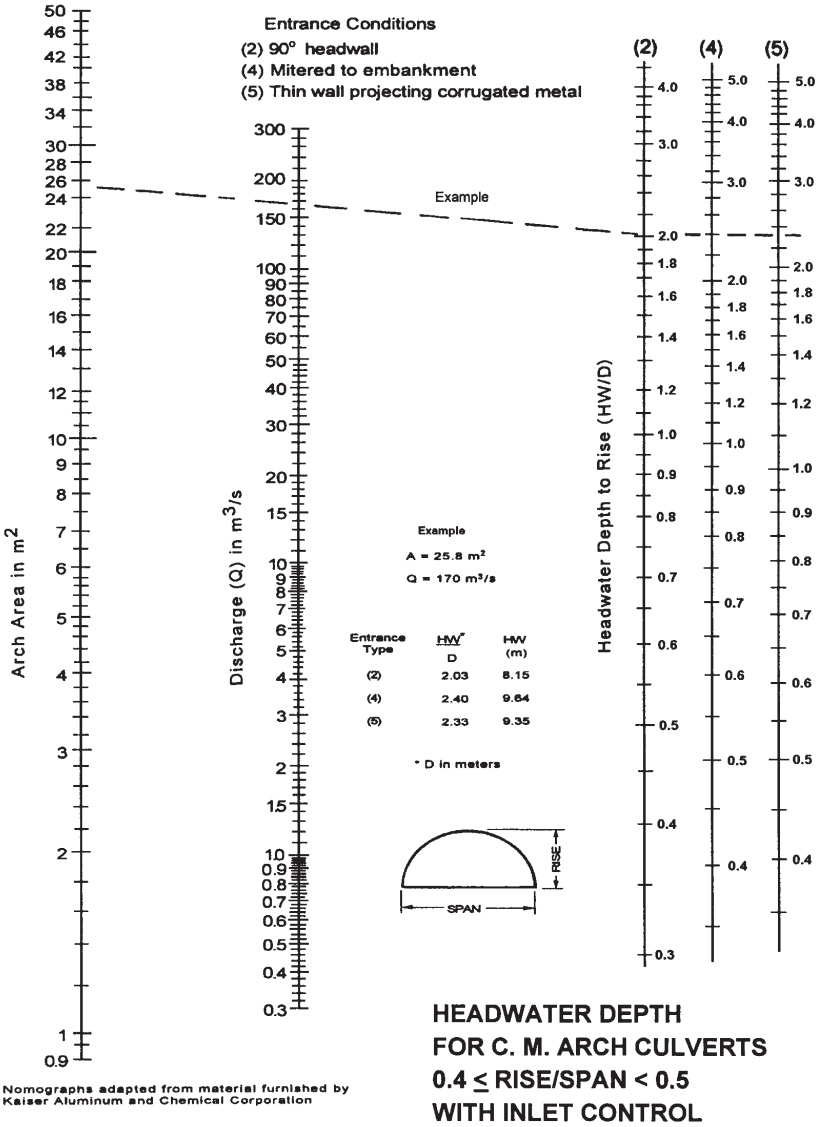

Figure 4.15 Headwater depth for structural plate corrugated steel arch with 0.4 ≤ rise/span < 0.5, under inlet control.

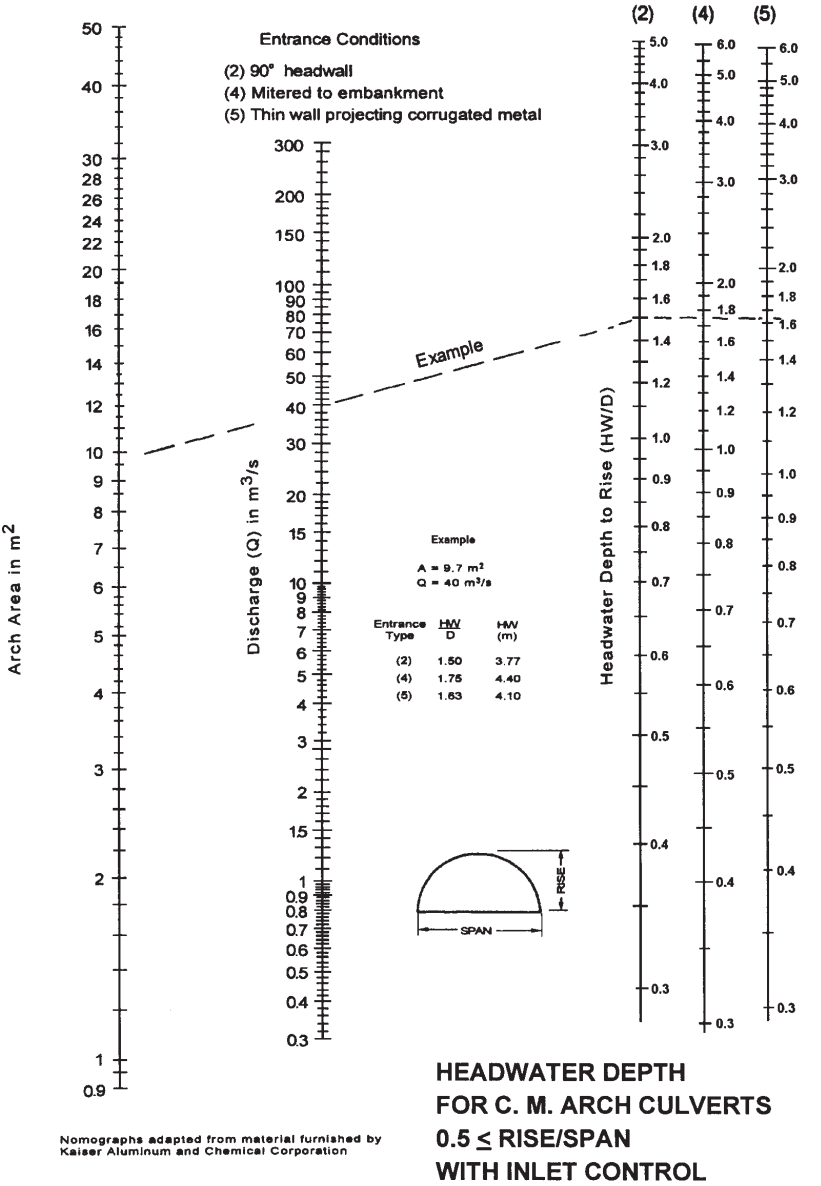

Figure 4.16 Headwater depth for structural plate corrugated steel arch with 0.5 ≤ rise/span, under inlet control.

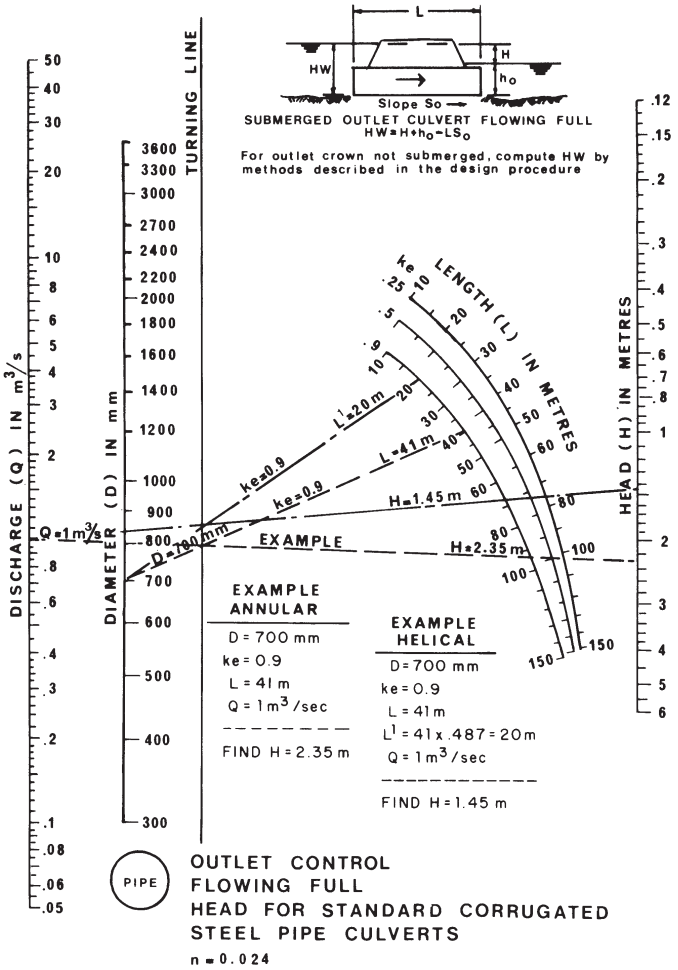

Figure 4.17 Head for round corrugated steel pipe flowing full under outlet control.

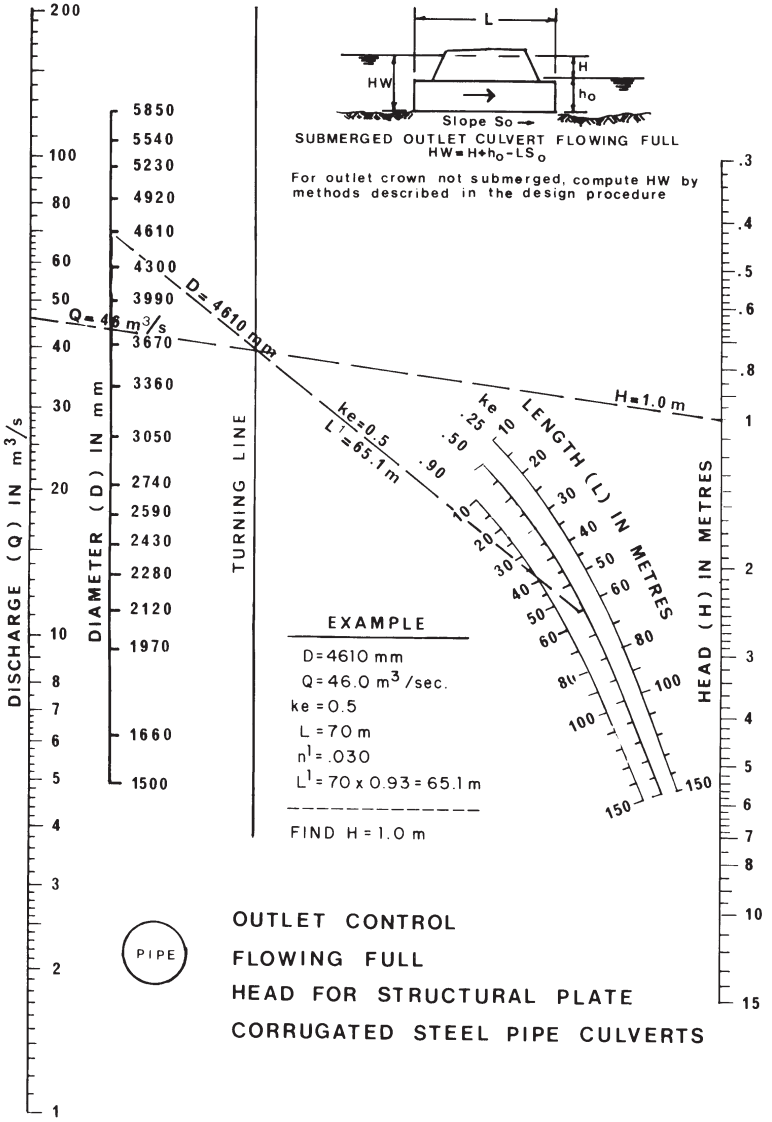

Figure 4.18 Head for round structural plate corrugated steel pipe flowing full under outlet control.

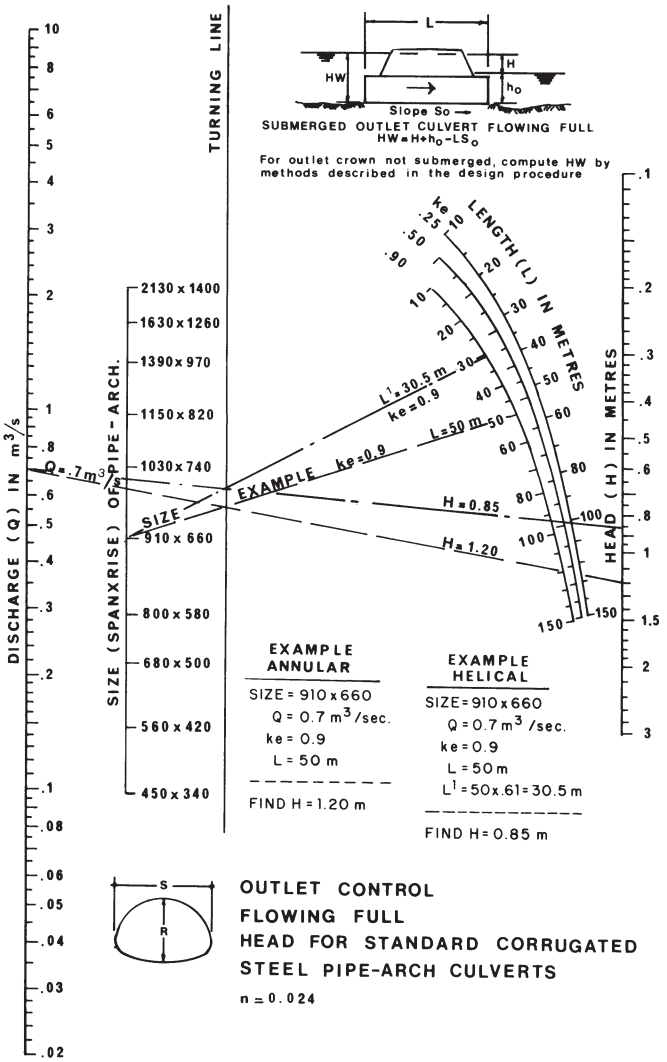

Figure 4.19 Head for corrugated steel pipe-arch flowing full under outlet control.

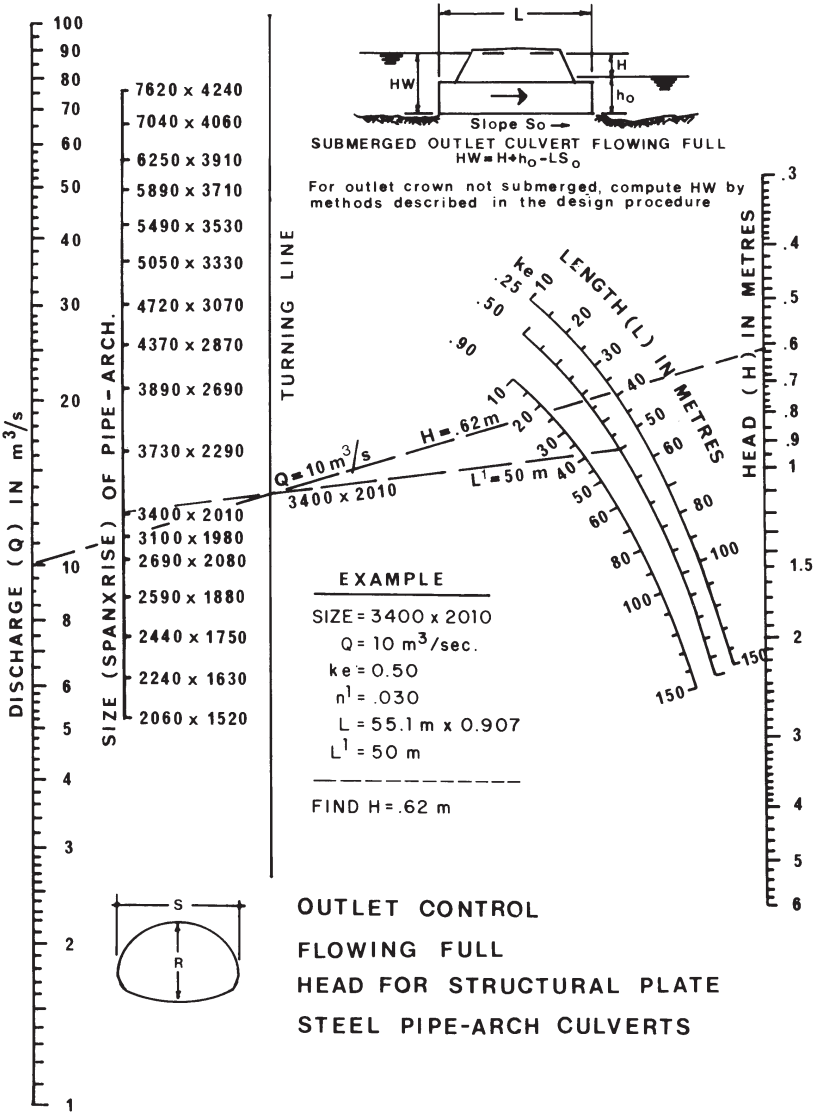

Figure 4.20 Head for structural plate corrugated steel pipe-arch flowing full under outlet control.

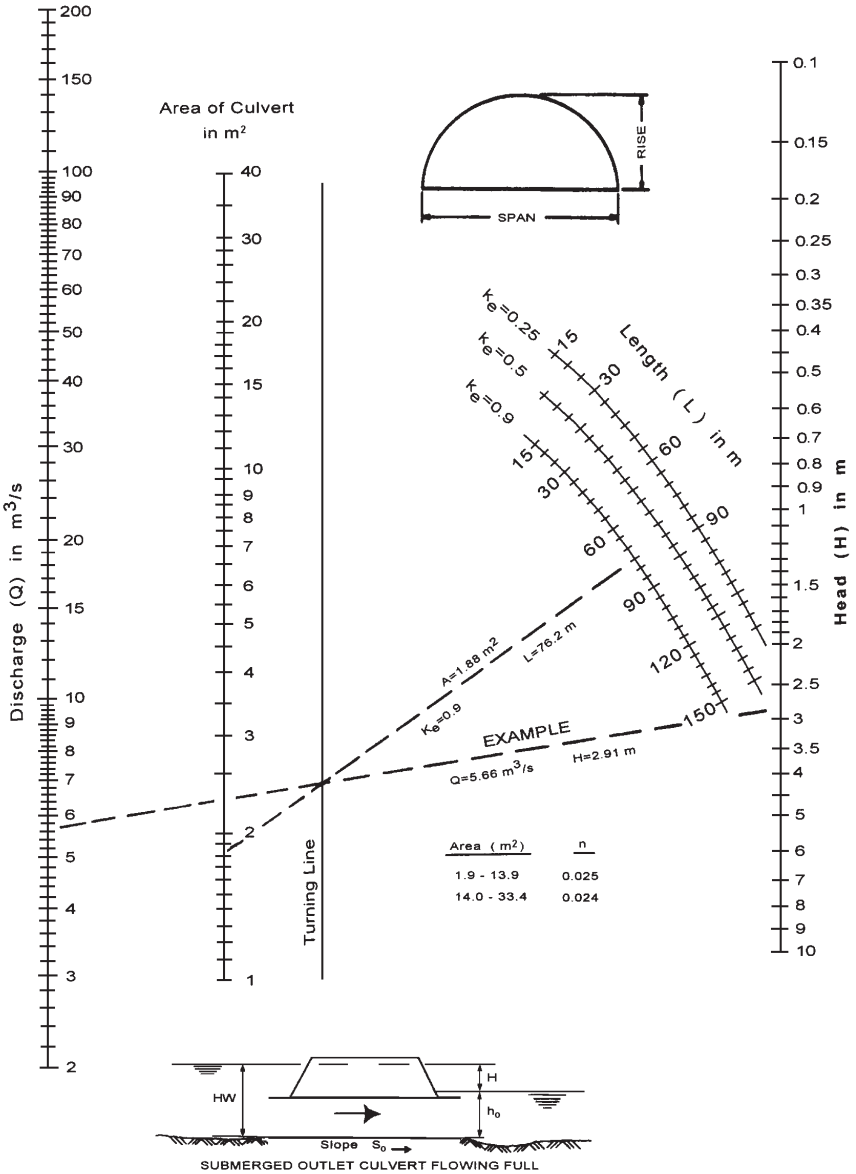

HEAD FOR
C.M. ARCH CULVERTS
FLOWING FULL
CONCRETE BOTTOM
0.4 ≤ RISE/SPAN < 0.5

Adapted from material furnished by
Kaiser Aluminum and Chemical Corporation

Figure 4.21 Head for structural plate corrugated steel arch with concrete bottom and 0.4 ≤ rise/span < 0.5, flowing full under outlet control.

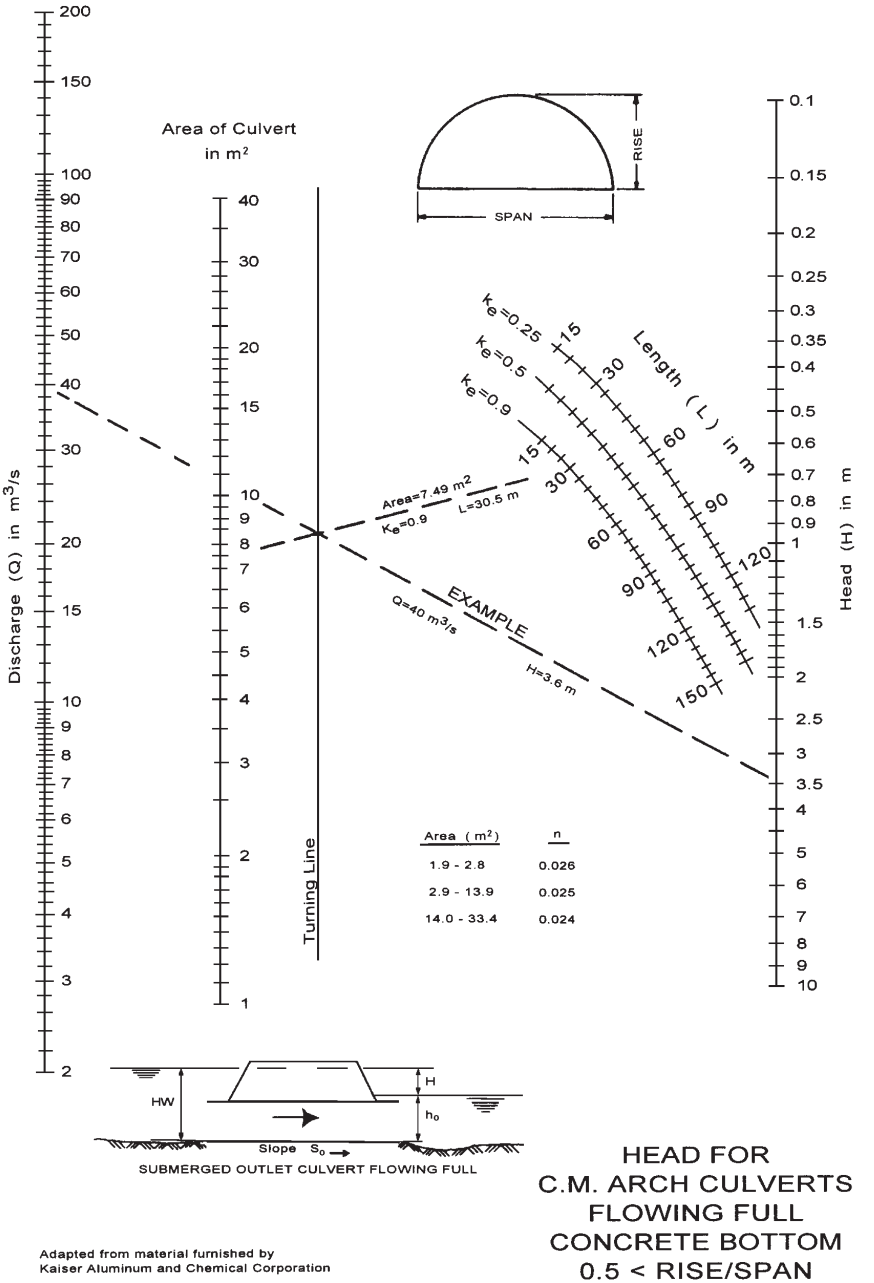

Figure 4.22 Head for structural plate corrugated steel arch with concrete bottom and 0.5 ≤ rise/span, flowing full under outlet control.

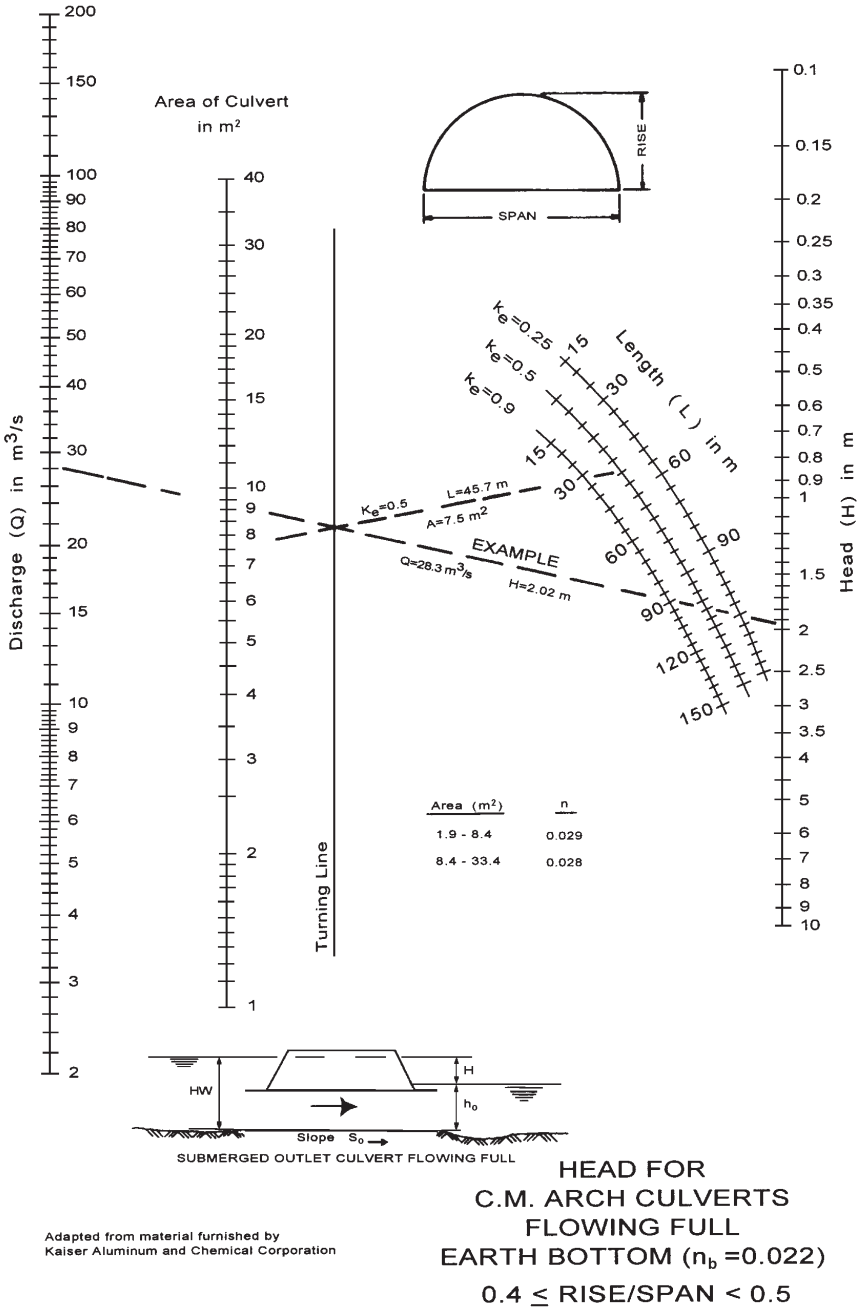

Figure 4.23 Head for structural plate corrugated steel arch with earth bottom and 0.4 ≤ Rise/Span < 0.5, flowing full under outlet control.

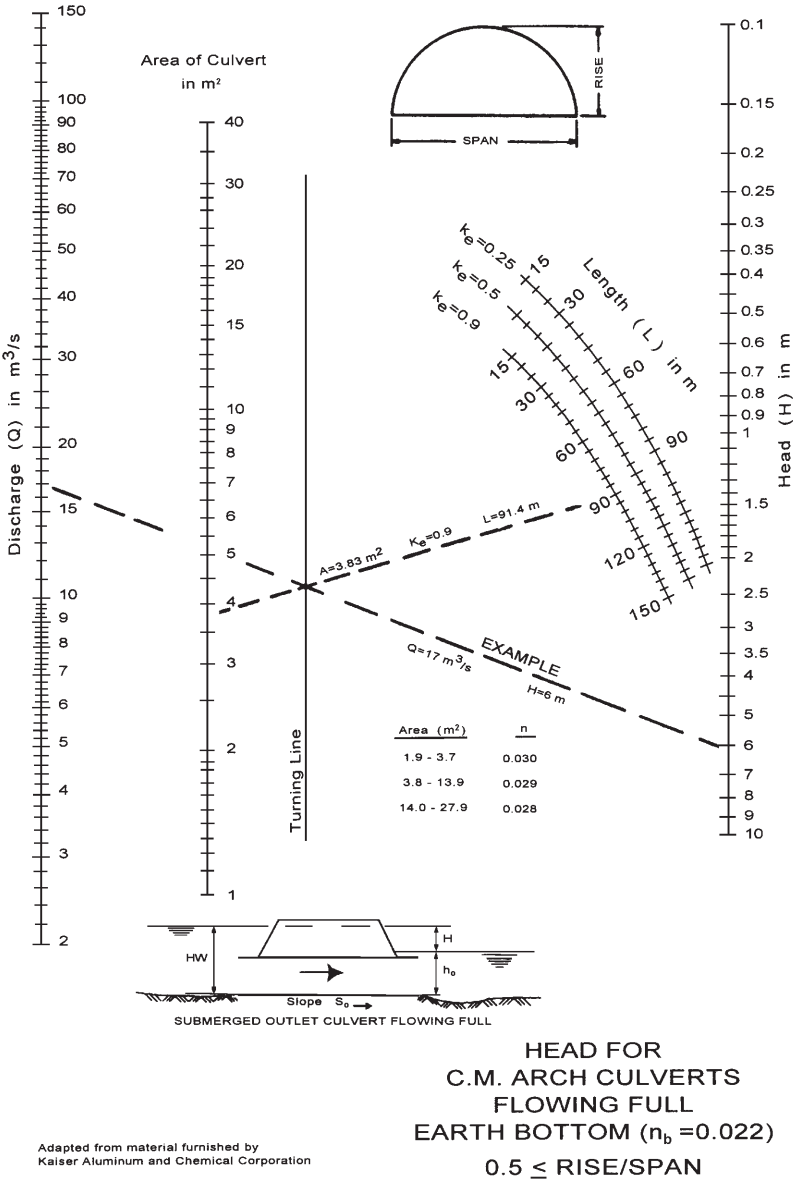

Figure 4.24 Head for structural plate corrugated steel arch with earth bottom and 0.5 ≤ Rise/Span, flowing full under outlet control.

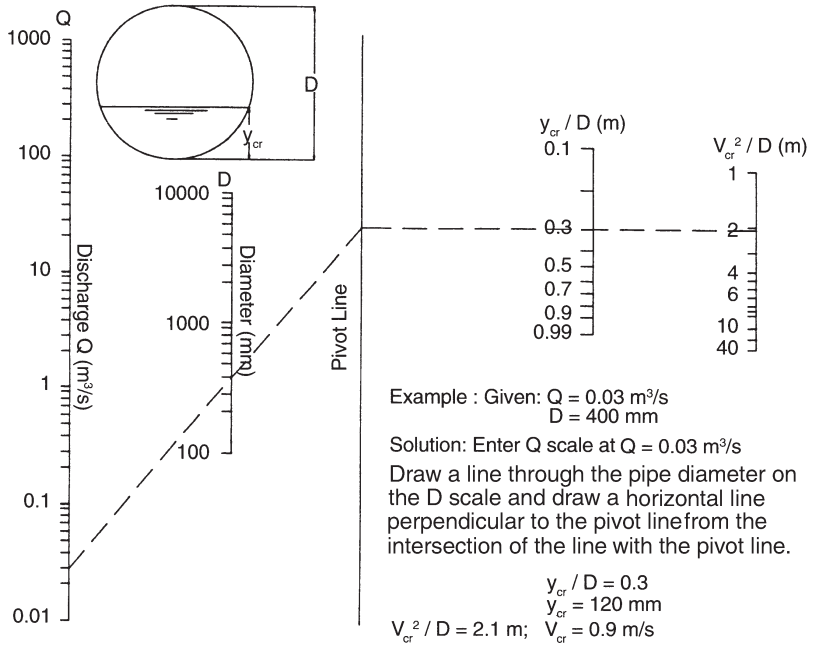

Figure 4.25 Critical depth for round corrugated steel and structural plate corrugated steel pipe.

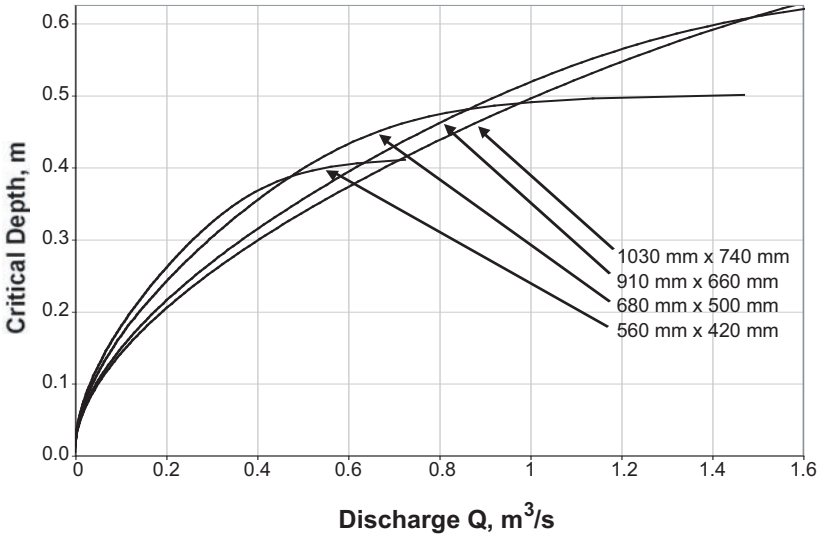

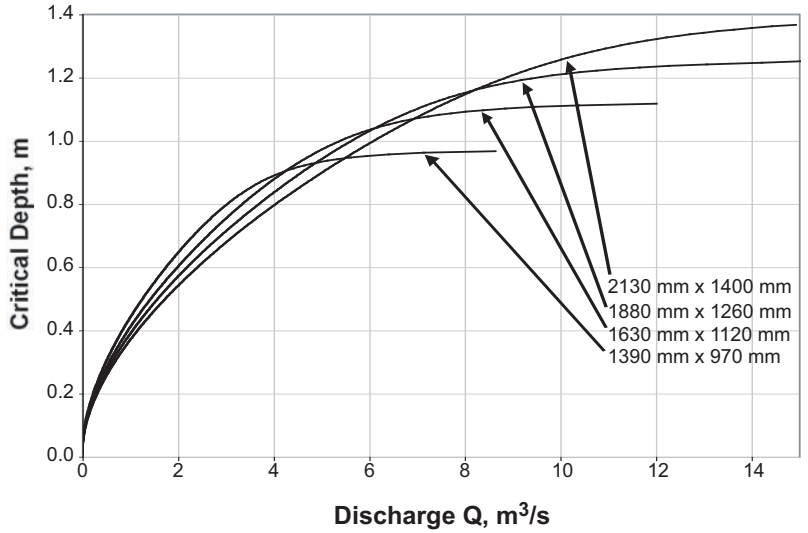

Figure 4.26 Critical depth for corrugated steel pipe-arch.

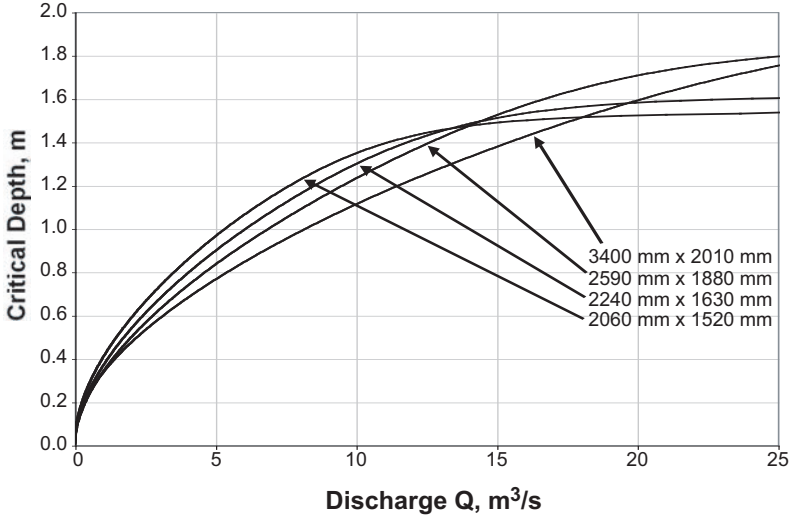

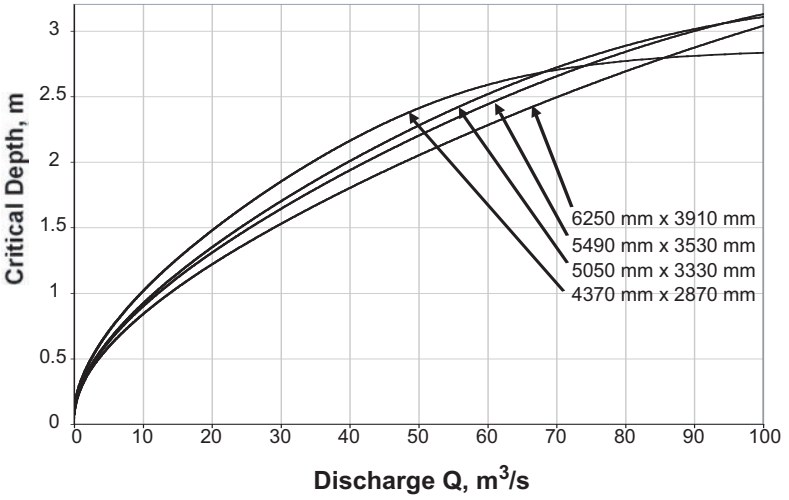

Figure 4.27 Critical depth for structural plate corrugated steel pipe-arch.

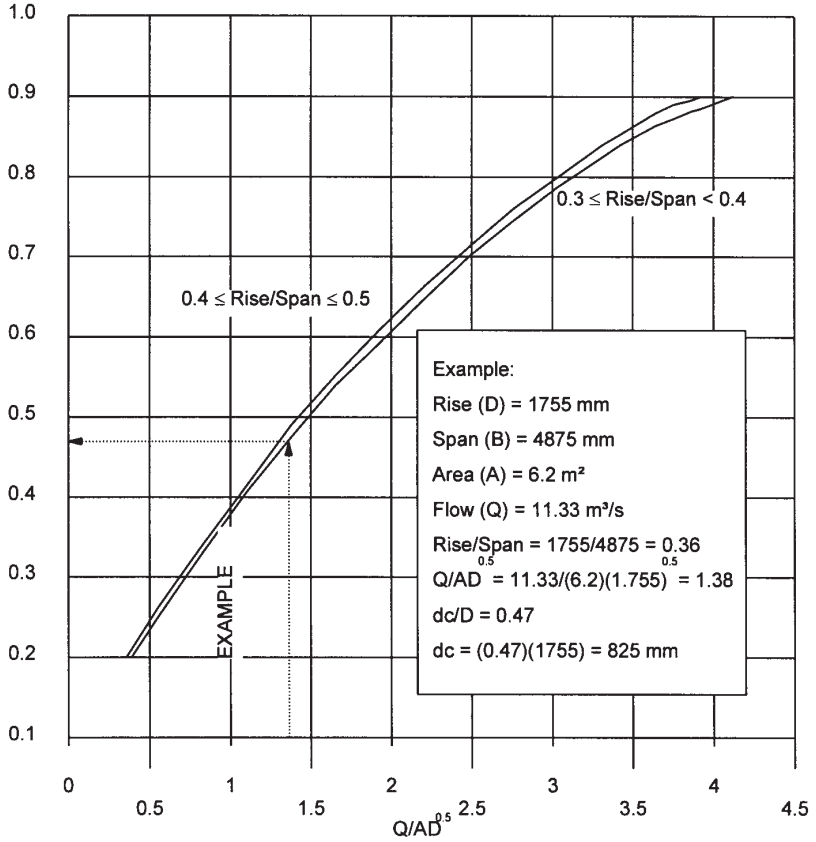

Figure 4.28 Critical depth for structural plate corrugated steel arch.

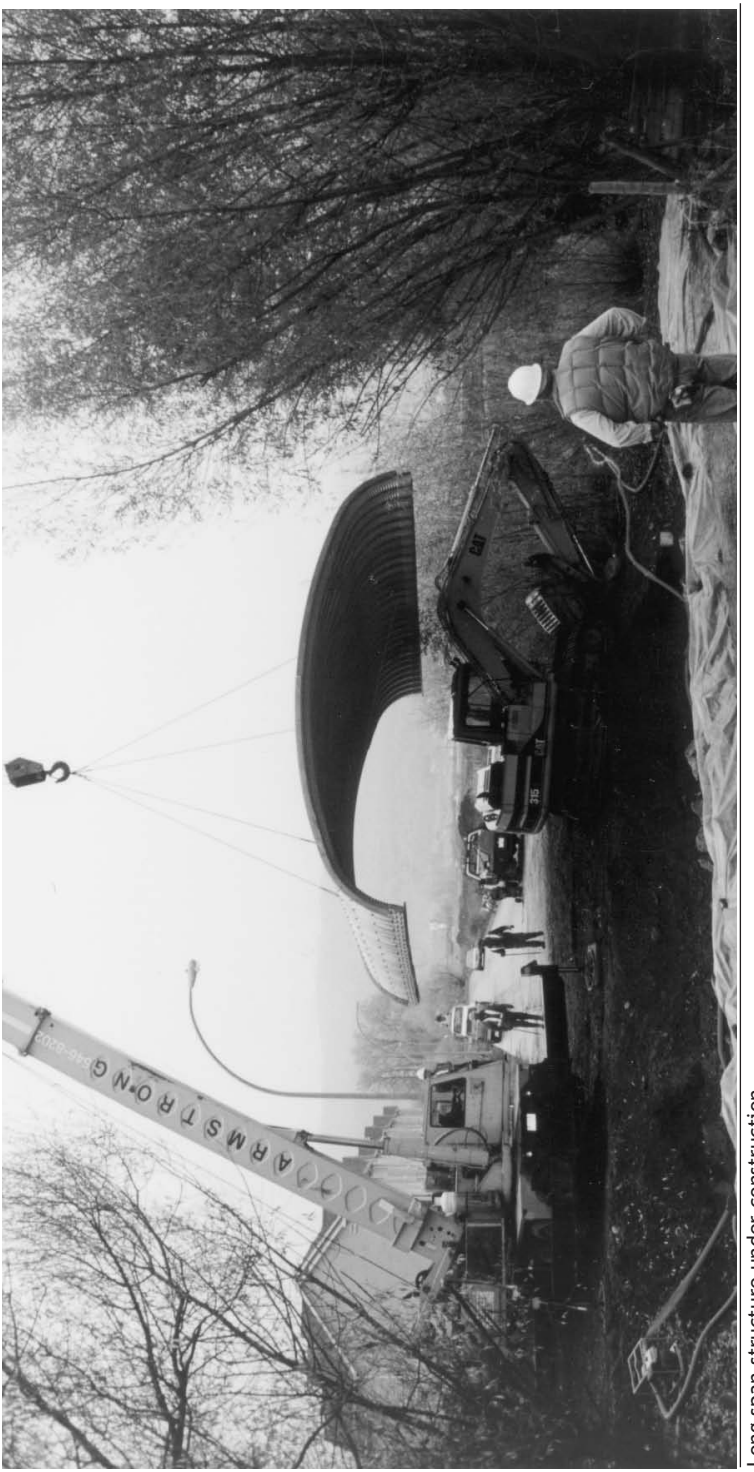

Long span structure under construction.

HYDRAULICS OF LONG SPAN STRUCTURES

Introduction

Standard procedures are presented here to determine the headwater depth resulting from a given flow through a long span structure under both inlet and outlet control conditions. The most common long span hydraulic shapes are the horizontal ellipse, the low profile arch, and the high profile arch. Useful hydraulic data pertaining to these shapes are presented in tabular and graphic form. Basic hydraulic formulas, flow conditions and definitions have been given previously. However, long span hydraulics include factors which are not considered in the earlier calculations.

Design

Long span structures are often small bridges which span the flood channel. This type of structure ordinarily permits little or no ponding at the inlet. Maximum headwater is usually below the top of the structure. In other words, there is usually some freeboard between the water surface and the top of the structure. This condition is quite different from the ordinary culvert which normally presents a small opening in an embankment crossing a larger flood channel.

The typical long span hydraulic conditions just described maintain effective approach velocity. The following long span hydraulic design procedure considers this approach velocity. The formulas and coefficients taken from the U.S. Federal Highway Administration (FHWA) methodology have been modified to include the approach velocity. In this discussion, headwater, HW, refers to the water surface and not to the energy grade line. This is different than the FHWA procedures, where HW refers to the energy grade line which corresponds to HW + Φ in this discussion.

Design Chart

Inlet control is expected to govern in most long spans. Figure 4.29 allows the designer to conveniently calculate the headwater depth for three standard shapes having the most typical inlet condition. This figure is a plot of the two design equations below (for unsubmerged and submerged inlets), and is based on an inlet that is either a square end with a headwall or a step-beveled end with a concrete collar (Type 1 in Table 4.10). The accuracy of the curves is within the degree to which the graph can be read. Using the design discharge and the structure span and rise, the curve for the structure desired gives the ratio of the headwater depth, approach velocity head and slope correction to the structure rise. The headwater depth is determined by subtracting the velocity head and slope correction from the product of the ratio and the structure rise. Figure 4.29 also includes a table of velocity heads for a variety of approach velocities.

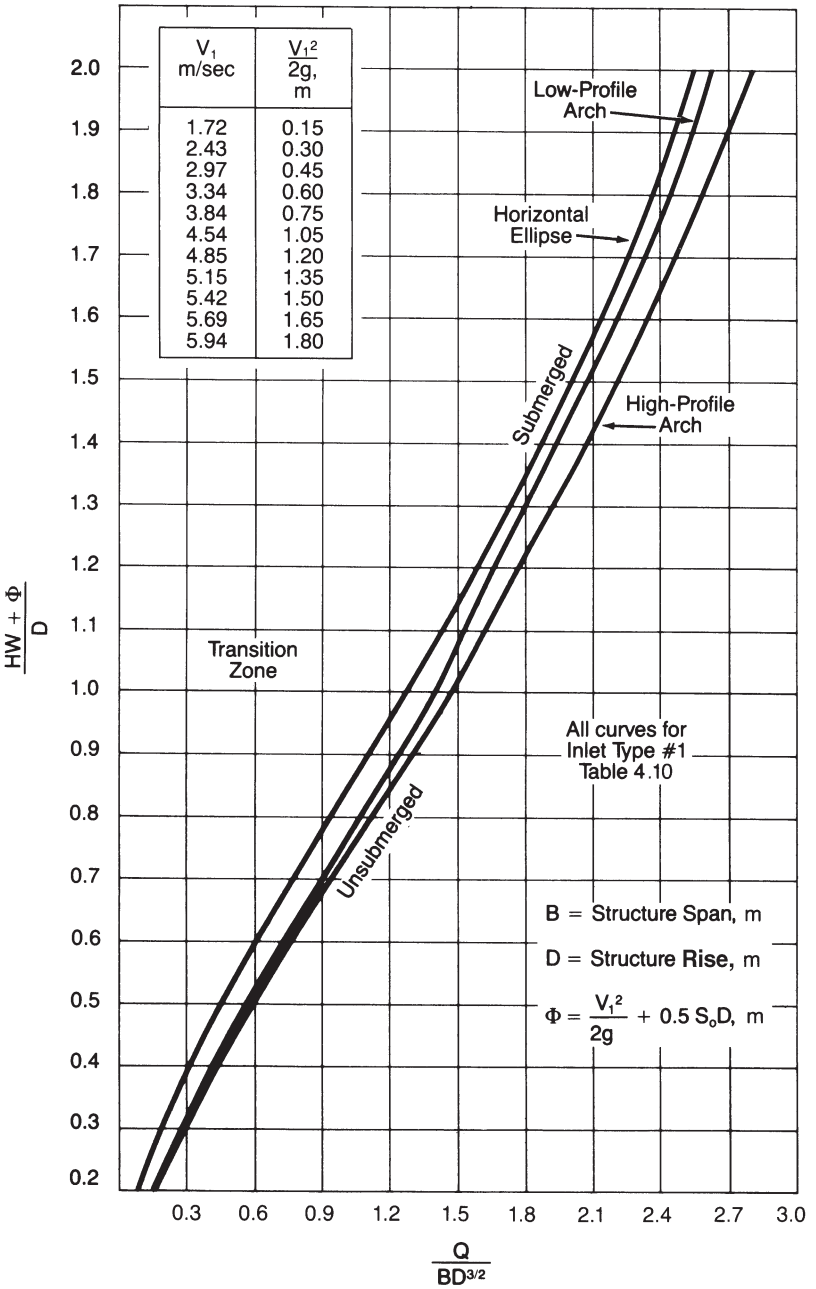

Figure 4.29 Headwater depth for long span corrugated steel structures under inlet control.

Table 4.10 Inlet loss coefficients for long spans

Inlet Type	Enhanced Coefficients					$\left\{\frac{Q}{AD^{1/2}}\right\}$	
	k_d	k_p	k	j	k_e	Unsubmerged Maximum	Submerged Minimum
1	0.1243	0.69	0.0272	2.0	0.5	1.82	2.10
2	0.0984	0.74	0.0079	2.5	0.2	1.82	2.32

Notes:
1) Type I inlet is square end with headwall or step-beveled end with concrete collar.
2) Type 2 inlet is square or step-beveled end with mitered edge on headwall.
3) Special improved inlet or outlet configurations can reduce headwater depths.
4) Coefficients k and k_d are not dimensionless.

Design Calculations

Inlet Control

The equations for calculating headwater depth for long span structures under inlet control are:

For unsubmerged inlets:

$$HW = H_c + H_e - 0.5\, S_o\, D - \frac{V_1^2}{2g}$$

For submerged inlets:

$$HW = k_d\, D \left\{\frac{Q}{AD^{1/2}}\right\} + k_p\, D - 0.5\, S_o\, D - \frac{V_1^2}{2g}$$

where:
- HW = headwater depth from the invert to the water surface, m
- H_c = critical head, m
- H_e = increment of head above the critical head, m
- S_o = slope of the structure, m/m
- D = rise of the structure, m
- V_1 = approach velocity, m/s
- g = gravitational constant, 9.806 m/s^2
- k_d, k_p = coefficients based on inlet type (Table 4.10)
- Q = design discharge, m^3/s
- A = full cross-sectional end area of the structure, m^2

To determine if the flow condition is submerged or unsubmerged, the value of $\left\{\frac{Q}{AD^{1/2}}\right\}$ is calculated and reference is made to Table 4.10. If the flow is in the transition zone between unsubmerged and submerged, a reasonable approximation can be made by using both equations and interpolating based on where the value occurs relative to the limits in the table. When a performance curve is plotted, such as in Figure 4.29, the transition zone is filled in manually.

The critical head is equal to the critical depth in the structure at design flow plus the velocity head at that flow:

$$H_c = d_c + \frac{V_c^2}{2g}$$

where:
- d_c = critical depth, m
- V_c = critical velocity, m/s

The critical depth can be interpolated from Tables 4.11 through 4.13. Using the design discharge, the critical depth, as a decimal fraction of the structure rise, is estimated by interpolating between known discharges for a number of set critical depth decimal fractions.

Table 4.11 Hydraulic data for structural plate horizontal ellipse

		Full Flow Data				Discharge – Q (m^3/s) When Critical Depth =					
Span, mm	Rise, mm	Area, m^2	WP, m	R, m	$AR^{2/3}$, $m^{8/3}$	0.4D	0.5D	0.6D	0.7D	0.8D	0.9D
1630	1350	1.74	4.717	0.369	0.895	1.255	1.996	2.821	3.792	4.973	6.704
2130	1420	2.41	5.692	0.425	1.362	1.799	2.859	4.011	5.352	6.956	9.288
2900	1930	4.36	7.643	0.570	2.997	3.782	5.928	8.434	11.407	15.172	20.590
3200	2260	5.64	8.618	0.654	4.249	5.295	8.299	11.796	15.940	21.151	28.681
3680	2440	6.85	9.593	0.714	5.472	6.620	10.364	14.819	20.177	26.934	36.467
4420	2790	9.78	11.544	0.847	8.755	10.244	16.101	22.756	30.568	40.178	54.775
4953	3251	12.86	13.007	0.988	12.756	14.838	23.255	33.051	44.661	59.252	80.344
5156	3683	14.87	13.983	1.063	15.488	17.795	27.966	39.627	53.381	70.401	95.650
5715	3988	18.08	15.446	1.170	20.074	22.585	35.670	50.336	67.541	88.457	119.91
6230	3840	18.40	15.938	1.155	20.255	22.326	35.004	49.902	67.657	90.356	122.69
6680	3990	20.49	16.909	1.212	23.292	25.340	39.743	56.725	77.022	103.01	139.87
7010	4290	23.15	17.884	1.294	27.489	29.710	46.584	66.421	90.070	120.31	163.36
7470	4470	25.49	18.859	1.351	31.151	33.271	52.183	74.483	101.13	135.27	183.67
7950	5540	34.25	21.298	1.608	47.009	50.168	78.689	111.73	150.82	199.87	271.35
8280	5820	37.59	22.273	1.687	53.270	56.526	88.678	125.87	169.87	224.93	305.36
8970	6070	42.23	23.736	1.779	62.002	64.763	101.54	144.28	194.9	258.70	351.26
10110	6120	47.57	25.687	1.852	71.739	72.906	114.32	163.07	221.24	295.69	401.48
10640	6500	53.29	27.150	1.963	83.546	84.182	131.99	188.22	255.28	341.05	463.09
11250	7800	68.25	30.076	2.269	117.84	118.66	186.12	264.29	356.79	472.92	642.06
11790	8510	78.31	32.027	2.445	142.12	142.45	223.60	317.20	427.82	565.47	767.49

Table 4.12 Hydraulic data for structural plate low profile arch

		Full Flow Data				Discharge – Q (m^3/s) When Critical Depth =					
Span, mm	Rise, mm	Area, m^2	WP, m	R, m	$AR^{2/3}$, $m^{8/3}$	0.4D	0.5D	0.6D	0.7D	0.8D	0.9D
6120	2290	11.18	14.608	0.765	9.351	12.490	18.699	31.558	40.739	51.808	67.973
5920	2080	9.75	13.901	0.701	7.693	9.964	15.085	26.384	34.024	43.237	56.703
6550	2360	12.39	15.544	0.797	10.650	14.606	21.714	35.771	46.139	58.642	76.911
6780	2410	13.01	16.013	0.812	11.323	15.722	23.305	37.985	48.974	62.228	81.600
7010	2440	13.64	16.481	0.827	12.017	16.878	24.953	40.270	51.901	65.928	86.438
7240	2490	14.29	16.949	0.843	12.752	18.074	26.659	42.628	54.919	69.743	91.426
7470	2540	14.94	17.418	0.858	13.489	19.311	28.422	45.060	58.03	73.675	96.565
7670	2570	15.62	17.886	0.873	14.267	20.588	30.245	47.565	61.234	77.724	101.85
7900	2620	16.30	18.354	0.888	15.058	21.906	32.127	50.144	64.532	81.891	107.30
8310	3280	22.04	20.130	1.094	23.400	33.827	49.090	66.715	95.236	121.28	159.27
8760	3350	23.74	21.067	1.127	25.709	37.437	54.205	80.649	104.26	132.72	174.24
9420	3480	26.39	22.472	1.174	29.368	43.197	62.369	91.840	118.61	150.89	198.01
9630	3680	28.69	23.179	1.237	33.060	48.759	70.211	94.988	132.35	168.42	221.06
9860	3730	29.64	23.647	1.253	34.449	50.928	73.281	106.62	137.73	175.24	229.99
10080	3780	30.61	24.116	1.269	35.878	53.145	76.420	110.91	143.23	182.21	239.10
10110	3610	29.15	23.874	1.221	33.300	49.377	71.137	103.81	133.95	170.3	223.39
10490	4040	34.09	25.288	1.348	41.599	61.795	88.615	119.53	164.48	209.26	274.62
10540	3680	31.06	24.814	1.251	36.061	53.736	77.326	112.23	144.74	183.93	241.22
11560	4780	44.30	28.325	1.564	59.688	89.104	127.07	170.48	230.88	293.77	385.53
10770	3730	32.03	25.282	1.266	37.484	55.988	80.526	116.58	150.30	190.96	250.41
11790	4800	45.51	28.793	1.580	61.737	92.194	131.43	176.31	238.49	303.43	398.19

Table 4.13 Hydraulic data for structural plate high profile arch

Span, mm	Rise, mm	Full Flow Data: Area, m^2	WP, m	R, m	$AR^{2/3}$, $m^{8/3}$	Discharge – Q (m^3/s) When Critical Depth = 0.4D	0.5D	0.6D	0.7D	0.8D	0.9D
6300	3680	20.34	17.558	1.158	22.429	26.746	37.644	44.668	56.453	69.591	84.429
6550	3560	20.46	17.878	1.144	22.379	24.665	34.666	40.150	50.502	61.991	74.810
6780	3610	21.36	18.359	1.163	23.622	26.004	36.533	42.028	52.888	64.935	78.382
7010	3660	22.28	18.839	1.182	24.907	27.389	38.465	43.973	55.360	67.99	82.093
7240	3680	23.21	19.318	1.201	26.224	28.821	40.463	45.987	57.920	71.155	85.945
7670	3740	25.09	20.273	1.238	28.927	31.828	44.661	50.224	63.311	77.829	94.086
7870	4655	32.98	22.230	1.484	42.908	41.100	57.882	76.634	86.947	105.88	126.90
8100	4650	34.17	22.718	1.504	44.854	42.896	60.383	79.911	90.075	109.73	131.54
8560	5020	38.74	24.118	1.606	53.128	47.769	67.26	89.035	112.93	122.79	146.64
8590	4630	35.51	23.524	1.509	46.717	41.377	58.155	76.855	97.333	103.06	123.00
9220	4920	40.28	25.135	1.602	55.148	52.619	73.941	97.696	107.09	130.73	156.93
9450	4970	41.53	25.615	1.621	57.308	54.719	76.871	101.54	110.78	135.29	162.46
9680	5260	45.25	26.537	1.705	64.580	58.103	81.670	107.93	136.70	144.89	173.35
9910	5280	46.58	27.017	1.724	66.971	60.327	84.774	112.01	141.83	149.68	179.15
10360	5380	49.28	27.976	1.761	71.864	64.938	91.210	120.46	131.08	159.63	191.21
10360	5830	54.58	28.864	1.891	83.463	67.355	94.744	125.30	158.81	195.08	203.30
11350	6910	69.09	32.061	2.155	115.26	121.36	171.01	205.53	259.30	319.27	386.82
10570	5440	50.65	28.454	1.780	74.392	67.326	94.545	124.84	135.25	164.80	197.49
10590	5870	56.07	29.346	1.910	86.315	69.778	98.125	129.74	164.39	176.33	209.47
11580	6930	70.85	32.554	2.176	118.97	124.78	175.78	210.35	265.38	326.70	395.74

The critical velocity is calculated by dividing the design discharge by the partial flow area corresponding to the critical depth. The partial flow area can be determined from Figures 4.30 through 4.32 using the critical depth as a percentage of the structure rise. The partial flow area is the product of the proportional value from the figure and the full cross sectional area of the structure. The critical velocity is then:

$$V_c = \frac{Q}{A_c}$$

where: A_c = partial flow area based on the critical depth, m^2

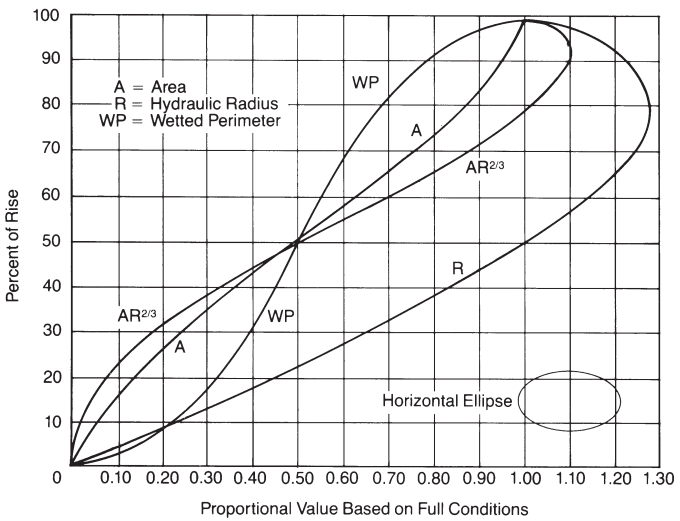

Figure 4.30 Hydraulic properties of long span horizontal ellipse.

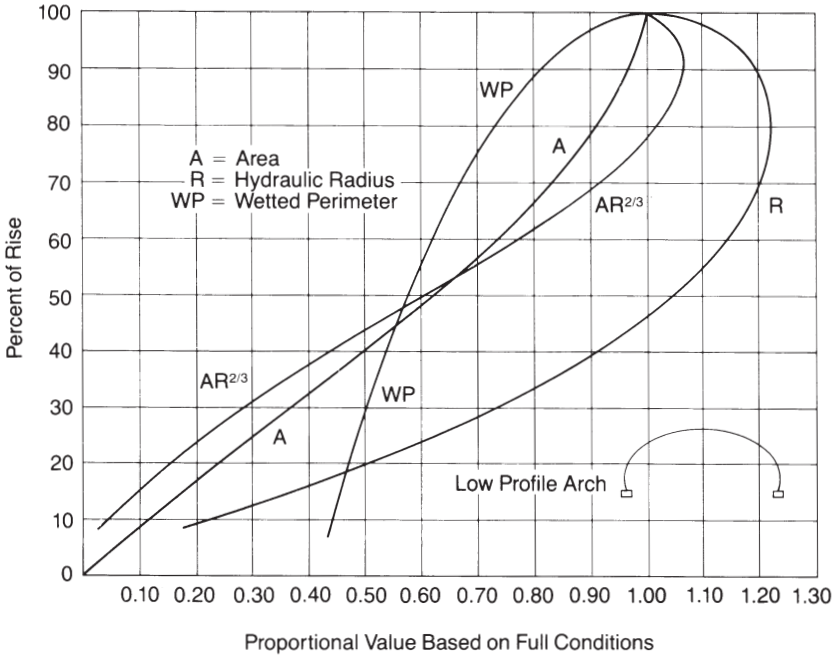

Figure 4.31 Hydraulic properties of long span low profile arch.

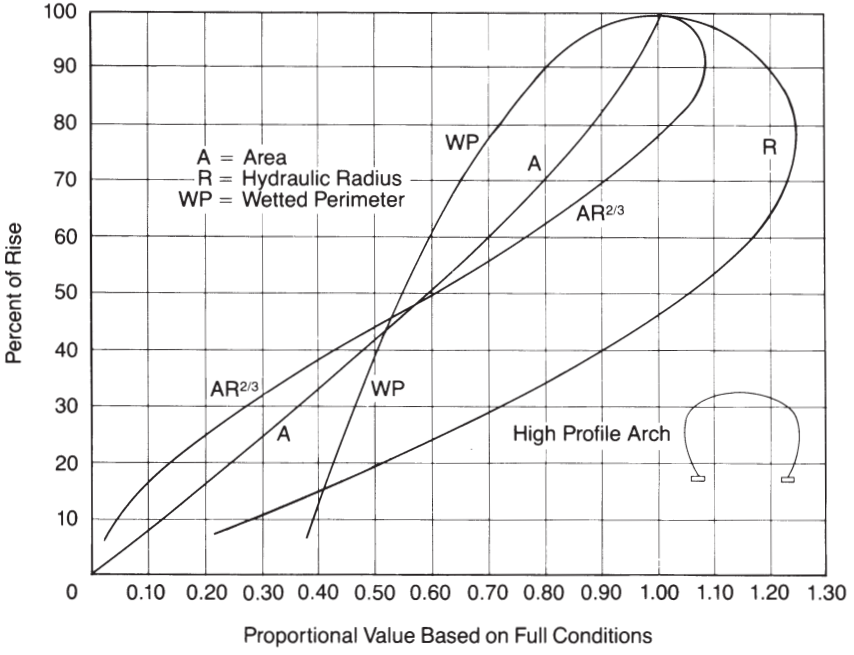

Figure 4.32 Hydraulic properties of long span high profile arch.

The accuracy of the critical depth may be checked using the basic formula for critical flow:

$$Q_c = \sqrt{\frac{gA_c^3}{T_c}}$$

where: T_c = width of the water surface for the critical depth case, m

For this calculation, detailed structure cross section geometry is required in order to calculate the water surface width when the water depth is the critical depth.

The increment of head above the critical head is:

$$H_e = k\,D \left\{ \frac{Q}{AD^{1/2}} \right\}^j$$

where: k, j = coefficients based on inlet type (Table 4.10)

Outlet Control

Free Water Surface

The situation where a long span has a free water surface extending through its full or nearly full length, as shown in Figure 4.5 D (possibly the most common flow condition), exists when the headwater depth is less than:

$$D + (1 + k_e)\,\frac{V_c^2}{2g}$$

where: k_e = entrance loss coefficient based on inlet type (Table 4.10)

Under this condition, the headwater depth must be determined by a backwater analysis if accurate results are required. Datum points d_1 and d_2 are established upstream and downstream from the structure, beyond the influence of the entrance and outlet. The backwater analysis determines the water surface profile by starting at the downstream point and moving to the upstream point. The backwater analysis must consider channel geometry between the downstream point and the outlet end of the structure, outlet loss, changing geometry of flow within the structure, inlet loss, and conditions between the inlet end of the structure and the upstream point.

Long span hydraulic properties are provided in Tables 4.11 through 4.13 and Figures 4.30 through 4.32. Entrance loss coefficients are in Table 4.10. The exit loss for these types of structures is typically very small and is often assumed to be zero.

Backwater analyses are considered outside the scope of this handbook. There are references that provide guidance for this procedure. In particular, the FHWA's "Hydraulic Design of Highway Culverts" CDROM contains a discussion and example of the backwater analysis procedure.

Full Flow

When full flow or nearly full flow exists, the headwater depth is determined by the formula:

$$HW = \left(k_e + \frac{2gn^2\,L}{R^{4/3}} + 1\right)\frac{V^2}{2g} + h_o - L\,S_o - \frac{V_1^2}{2g}$$

where:
- HW = headwater depth, m
- k_e = entrance loss coefficient (Table 4.10)
- g = gravitational constant = 9.806 m/s^2
- n = Manning's friction factor (Table 4.7)
- L = length of long span, m
- R = hydraulic radius, m = $\frac{A}{WP}$
- A = full cross sectional area of the long span, m^2
- WP = perimeter of the long span, m
- V = velocity, m/s
- h_o = outlet datum, m
- S_o = slope of structure, m/m
- V_1 = approach velocity, m/s

These conditions are as shown in Figure 4.5 A through C. They occur when the headwater depth is greater than:

$$D + (1 + k_e)\ \frac{V_c^2}{2g}$$

For arches or lined structures, a composite Manning's n value must be developed. A method described in an FHWA document is based on the assumption that the conveyance section can be broken down into a number of parts with associated wetted perimeters and Manning's n values. Each part of the conveyance section is then assumed to have a mean velocity equal to the mean velocity of the entire flow section. These assumptions lead to:

$$n = \left[\frac{\sum_{i=1}^{G} (p_i n_i^{1.5})}{p} \right]^{0.67}$$

where:
- n = weighted Manning's n value
- G = number of different roughnesses in the perimeter
- p_i = wetted perimeter influenced by material i, m
- n_i = Manning's n value for material i
- p = total wetted perimeter, m

In the case of arches, the wetted perimeter used in hydraulic radius calculations includes that portion of the structure above the natural channel and the natural channel itself.

For flow conditions as shown in Figure 4.5 A and B, when the tailwater depth is equal to or greater than the structure rise:

$$h_o = TW$$

For flow conditions as shown in Figure 4.5 C, when the tailwater depth is less than the structure rise:

$$h_o = \frac{d_c + D}{2} \text{ or TW (whichever is greater)}$$

The velocity, V, is determined by dividing the design discharge by the area, where the area is the full cross sectional area of the long span structure.

The remaining terms in the equation can be determined as previously discussed.

Summary of Procedure

Step 1. Collect all available information for the design. This includes the required design discharge, the structure length and slope, an allowable headwater elevation or depth, the average and maximum flood velocities in the channel, the proposed entrance type, and a desired structure shape.

Step 2. Select an initial structure size. This may be an arbitrary choice, or estimated using a maximum allowable velocity. To estimate a structure size, the minimum structure end area is determined by dividing the design discharge by the maximum allowable velocity. Geometric constraints may also influence the choice of an initial structure size. An example of this is where a minimum structure span is required to bridge a channel.

Step 3. Use Figure 4.29 and the design parameters to obtain a value for HW + Φ and then the headwater depth, HW. When required, more accurate results can be achieved by using the inlet control formulas to calculate the headwater depth.

Step 4. Check the calculated headwater depth against the allowable headwater depth. If the calculated headwater depth is greater than the allowable, select a larger structure and repeat Step 3. If the calculated headwater depth is less than the allowable, this is the resulting headwater depth for the structure selected under inlet control.

Step 5. Calculate $D + (1 + k_e) \frac{V_c^2}{2g}$

If this value is greater than the allowable headwater depth, use the backwater curve method to determine the water surface profile through the structure and the headwater depth. If this value is equal to or less than the allowable headwater depth, the full flow formula should be used to determine the headwater depth. The resulting headwater depth is for the structure selected under outlet control.

Step 6. Compare the inlet and outlet control headwater depths and use the larger. If the resulting headwater depth is greater than the allowable, a larger size or different shape structure should be chosen and the procedure repeated. If the headwater depth is significantly less than the allowable, a smaller size can be chosen and the procedure repeated in order to economize on the structure size.

SPECIAL HYDRAULIC CONSIDERATIONS

In addition to flow hydraulics, the drainage designer must consider hydraulic forces and other hydraulic phenomena that may be factors in assuring the integrity of the culvert and embankment.

Uplifting Forces

Uplifting forces on the inlet end of a culvert result from a variety of hydraulic factors that may act on the inlet during high flows. These may include; vortexes and eddy currents that cause scour, which in turn undermine the inlet and erode the culvert supporting embankment slope; debris blockage that accentuates the normal flow constriction, creating a larger trapped air space just inside the inlet, resulting in a significant buoyancy force that may lift the inlet; and sub-atmospheric pressures on the inside of the inlet, combined with flow forces or hydraulic pressures on the outside, that may cause the inward deflection of a skewed or beveled inlet, blocking flow and creating the potential for hydraulic uplift.

Buoyancy type failures can be prevented by structural anchorage of the culvert entrance. This anchorage should be extended into the embankment both below and to the sides of the pipe. Cut-end treatment of the culvert barrel in bevels or skews should have hook bolts embedded in some form of slope protection to protect against bending.

Piping

Piping is a hydraulic phenomena resulting from the submersion of the inlet end of a culvert and high pore pressure in the embankment. Hydrostatic pressure at the inlet will cause the water to seek seepage paths along the outside of the culvert barrel or through the embankment. Piping is the term used to describe the carrying of fill material, usually fines, caused by seepage along the barrel wall. The movement of soil particles through the fill will usually result in voids in the fill. This process has the potential to cause failure of the culvert and/or the embankment. Culvert ends should be sealed where the backfill and embankment material is prone to piping.

Weep Holes

These are perforations in the culvert barrel which are used to relieve pore pressure in the embankment. Generally, weep holes are not required in culvert design. For an installation involving prolonged ponding, there may be merit in considering a separate sub-drainage system to relieve pore pressure and control seepage in the embankment.

Anti-Seepage Collars

Vertical cutoff walls may be installed around the culvert barrel at regular intervals to intercept and prevent seepage along the outer wall of the culvert. These may also be referred to as diaphragms. They are most often used in small earth fill dams or levees and are recommended when ponding is expected for an extended time. An example of this is when the highway fill is to be used as a detention dam or temporary reservoir. In such cases, earth fill dam design and construction practices should be considered.

Single vs. Multiple Openings

A single culvert opening is, in general, the most satisfactory because of its greater ability to pass floating debris and driftwood. However, in many cases, the design

requires that the waterway be wide in order to get the water through quickly without ponding and flooding of the land upstream. In such cases, the solution may consist of using either an arch, a pipe-arch, or a battery of two or more openings. See Figure 4.33.

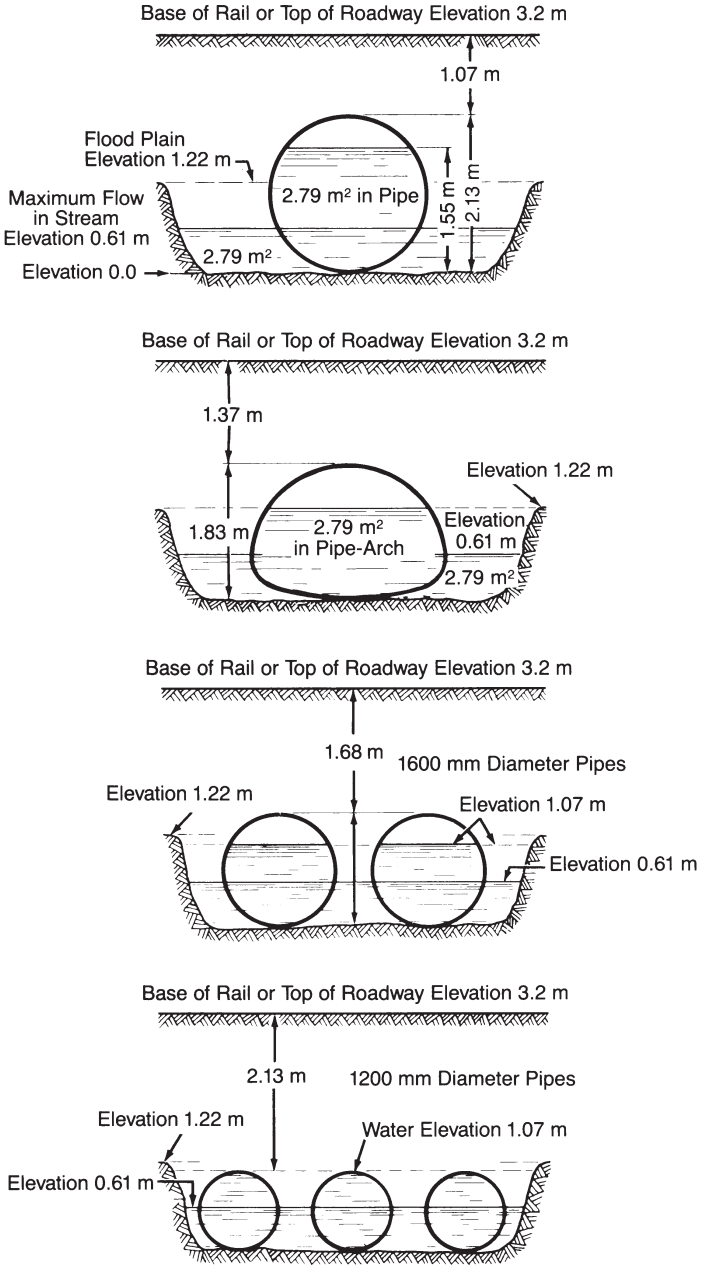

Figure 4.33 Culvert opening choices.

HYDRAULICS OF SUBDRAINS

Free Water

Ground water may be in the form of an underground reservoir or it may be flowing through a seam of pervious material. If it is flowing, it may be seeping or percolating through a seam between impervious strata, or be concentrated in the form of a spring.

Free water moves by gravity. It may consist of storm water seeping through cracks in the pavement or entering the ground along the edges of the road. It may be ground water percolating from a higher water-bearing stratum to a lower one, or from a water-bearing layer into the open as in the case of an excavation. A number of subdrainage applications are discussed in Chapter 1.

Water seeping through cracks in the pavement is especially noticeable in springtime and also visible shortly after rains when the remainder of the road has dried off. Passing traffic pumps some of this water, sometimes mixed with subgrade soil, up through the cracks or joints onto the road surface. This water is harmful because it may freeze on the surface and become an unexpected traffic hazard, and it can also destabilize the road subgrade. It can and should be removed in order to establish a stable subgrade and to prevent potential problems.

Subsurface Runoff Computation

In general, the amount of available ground water is equivalent to the amount of water that soaks into the ground from the surface less the amount that is lost by evaporation and that is used by plants. The nature of the terrain and the catchment area size, shape and slopes, as well as the character and slopes of the substrata, are contributing factors to the amount of ground water available and the volume of subsurface runoff.

A practical way to determine the presence of ground water and the potential flow rate is to dig a trench or test pit. This is helpful especially where an intercepting drain is to be placed across a seepage zone to intercept the ground water and divert the flow, as shown in Figure 4.34.

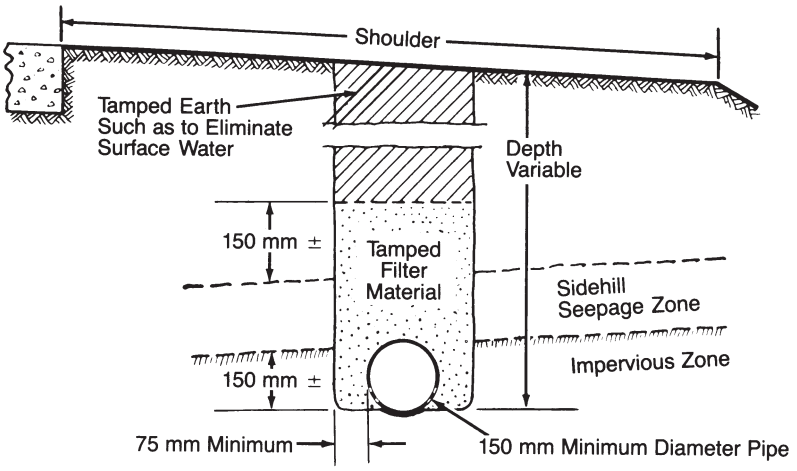

Figure 4.34 Intercepting drain.

Determining a correct size for subdrainage pipe requires an indirect approach. For problems other than those involving large flat areas, size determination becomes a matter of personal judgment and local experience. The following procedure applies to relatively flat areas.

The rate of runoff for average agricultural soils has been determined by agricultural engineering experiment stations to be about 10 mm in 24 hours. For areas of heavy rainfall or more pervious soils, this factor may be increased to 20 or 25 mm. The runoff expressed in mm per 24 hours is converted to $m^3/s/ha$ for design discharge calculations. Table 4.14 provides a conversion table.

Table 4.14 **Constants for subsurface runoff for various soil permeability types Depth of water measured in 24 hours**

Soil Permeability Type	Depth, mm	Quantity of Water per Lateral, $m^3/s/ha \times 10^{-4}$, constant c
Slow to Moderate	2	2.32
Slow to Moderate	4	4.63
Slow to Moderate	6	6.94
Moderate	8	9.26
Moderate	10	11.57
Moderate	12	13.9
Moderate	14	16.2
Moderate to Fast	16	18.5
Moderate to Fast	18	20.8
Moderate to Fast	20	23.1
Moderate to Fast	22	25.5
Moderate to Fast	24	27.8
Moderate to Fast	26	30.1
Moderate to Fast	28	32.5
Moderate to Fast	30	34.7

The design discharge can be calculated using the following formula:

$$Q = CA$$

where: Q = discharge or required capacity, m^3/s
C = subsurface runoff factor, $m^3/s/ha$
A = area to be drained, ha

Example

Assuming a drainage runoff rate of 10 mm in 24 hours (runoff factor, $C = 11.57 \times 10^{-4}$) and laterals 180 m long spaced on 15 m centers, the following result is obtained:

$$Q = (11.57 \times 10^{-4}) \left\{ \frac{180(15)}{10^4} \right\} = 3.12 \times 10^{-4}\ m^3/s$$

Size of Pipe

The size of pipe can be determined using Manning's formula, or by the use of a nomograph. For standard subdrainage applications, approximately 150 m of 150 mm diameter perforated steel pipe may be used before increasing to the next size.

Where possible, a minimum slope of 0.15 percent should be used for subdrainage lines. It is often permissible to use an even flatter slope to achieve a free outlet, but the steeper slope provides a self-cleansing flow velocity.

Geotextiles

There has been a trend, in recent years, toward the use of geotextiles or filter cloths in lieu of graded aggregate filters. They are used as a filter, to allow the free flow of water into the subdrainage pipe network while preventing fine erodible soils or clogging fines from entering the system, and as a separator, to provide a barrier to soil migration between the surrounding trench wall material and permeable trench backfill.

The diminishing availability and increasing costs of good quality aggregates for graded filters, and the increasing availability and lower cost of geotextiles engineered for these types of applications, has provided the impetus to substitute filter fabrics. Their use also expedites construction and, in many cases, they are used with graded aggregate filters as added insurance against soil migration.

A wide range of filter fabrics are available in a variety of styles and materials. Geotextiles are available as either woven or non-woven products. The properties that are relevant to this application include; permeability, tensile strength, pore size, equivalent opening size (EOS), puncture strength, alkali or acid resistance, freeze-thaw resistance, burst strength, and ultra violet stability.

In the selection of a geotextile, it is important to recognize that the role of the product is as a separator or as a separator and filter. For separation and filtration, the major parameter used for the selection of a filter cloth is the Equivalent or Effective Opening Size (EOS). The choice of fabric EOS must take into consideration the grain size distribution and nature of the soil materials that it is to separate and the desired system permeability. Fabrics for separation and filtration usually have an EOS of between 150 and 200 mm.

A typical cross-section of a filter trench design utilizing filter fabric as a separator/filter is shown in Figure 4.35.

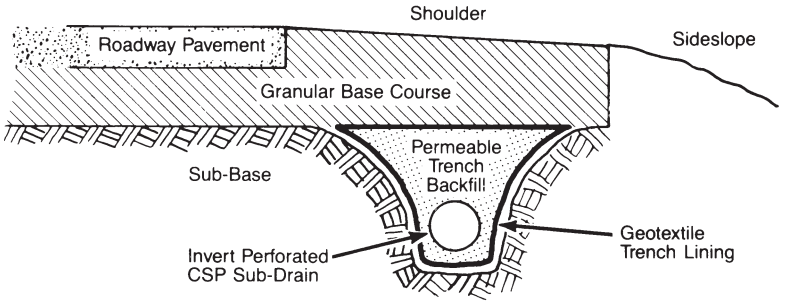

Figure 4.35 Trench drain utilizing geotextile.

HYDRAULICS OF STORM WATER INLETS

Storm water inlets are the means by which storm runoff enters the sewer system. Their design is often neglected, or it receives very little attention, during the design of storm drainage systems.

If inlets are unable to transmit the design inflow into the sewer system, then the system will not be utilized to its hydraulic design capacity. In some cases, though, it may be desirable to limit the inflow into the sewer system as a means of storm water management. In such cases it is imperative that more emphasis be placed on inlet design to assure that the type, location and capacity of the inlet will achieve the overall drainage requirements.

Slotted drain at work in Montreal, Quebec.

No single inlet type is best suited for all conditions. Many different types of inlets have been developed, as shown in Figure 4.36, based on practical experience and rules of thumb. The hydraulic capacities of some of these inlets is often unknown, resulting in erroneous capacity estimates.

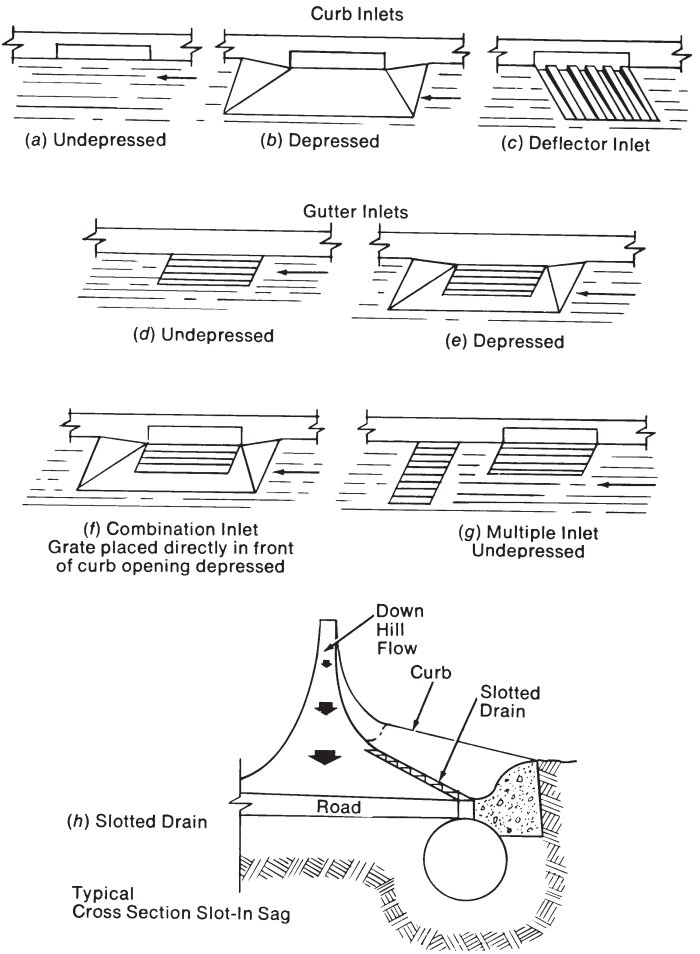

Figure 4.36 Stormwater inlets.

The hydraulic efficiency of inlets is a function of street grade and cross-slope, and inlet and gutter depression geometry. A steeper street cross-slope will increase the depth of flow in the gutter. Depressed gutters concentrate the flow at the inlets. The depth of flow in a gutter may be estimated from the nomograph in Figure 4.37.

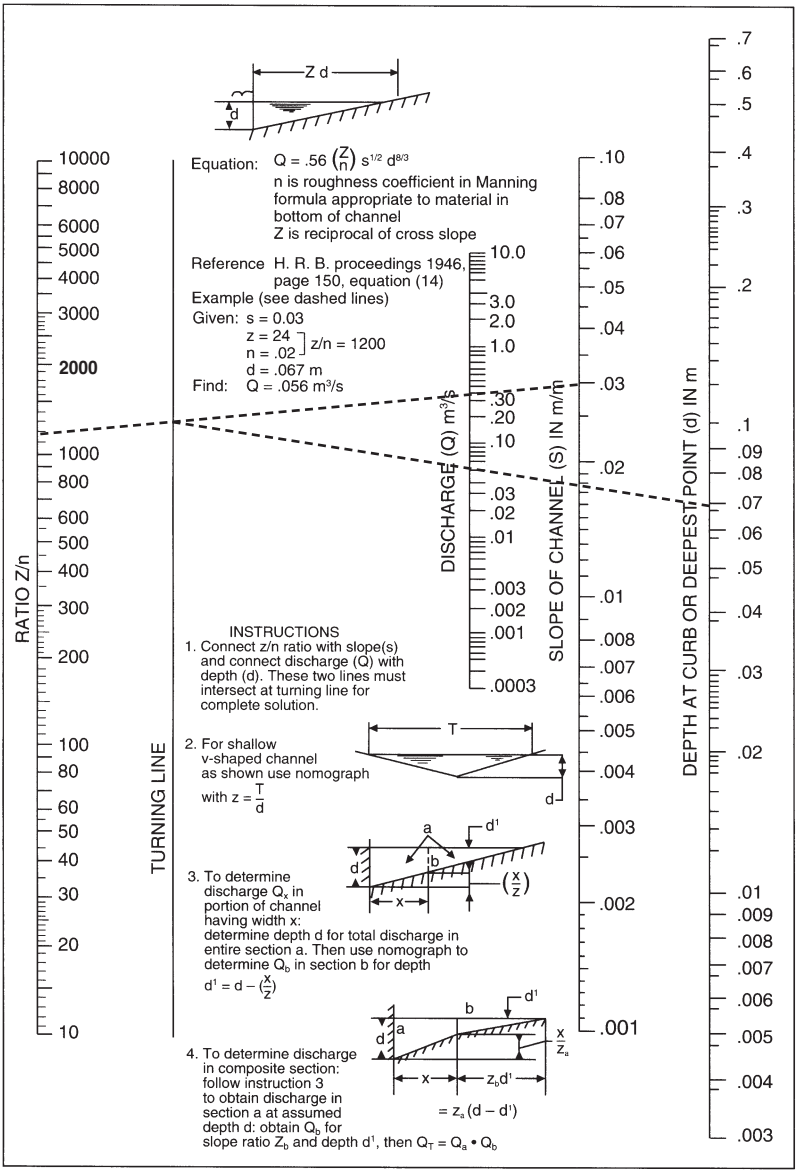

Figure 4.37 Nomograph for flow in triangular channels.

Research work on inlet capacities carried out by various agencies, institutions and municipalities has resulted in the development of empirical equations, hydraulic capacity charts and nomographs to help the designer with storm water inlet selection.

The inlet capacity of an undepressed curb inlet may be expressed by the equation:

$$Q = (4.82 \times 10^{-3})\, d\, l \sqrt{gd}$$

where:
Q = discharge into inlet, m^3/s
d = depth of flow in gutter, m
l = length of opening, m
g = gravitational constant, 9.806 m/s^2

If the gutter is of a wedge shape cross section with a street cross-slope of between 0.001 and 0.100 m/m, the inlet capacity of an undepressed curb inlet may be expressed by the equation:

$$Q = 1.29\, i^{0.579}\, l \left\{ \frac{Q_o}{\sqrt{s/n}} \right\}^{0.563}$$

where:
i = cross-slope, m/m
Q_o = flow in the gutter, m^3/s
s = hydraulic gradient of the gutter (street grade), m/m
n = Manning's n of the gutter

Slotted drain inlets are typically located as spaced curb inlets on a grade (sloping roadway) to collect downhill flow, or located in a sag (low point). The necessary length of slot can be determined using Figures 4.37 through 4.39.

For a series of slotted drain curb inlets on a grade, each inlet will collect all or a major portion of the flow to it. The anticipated accumulated flow at points along the curb can be determined by the methods described above.

Once the initial upstream inlet flow is established, Figure 4.38 is used to determine the required length of slot to accommodate the total flow at the inlet.

The length of slot actually used may be less than required by Figure 4.38. Carryover is that portion of the flow that does not form part of the flow captured by the slotted drain. While some of the flow enters the drain, some flows past the drain to the next inlet. The efficiency of a slotted drain, required in order to consider carryover, is shown in Figure 4.39.

If carryover is permitted, the designer assumes an actual slot length, L_A, such that the ratio of the actual slot length to the length of slot required for no carryover (L_A/L_R) is less than 1.0 but greater than 0.4. Standard slot lengths are 3 and 6 m. Economics favor slotted drain inlets designed to allow carryover rather than for total flow interception. If carryover is allowed, there must be a feasible location to which the carryover may flow.

The slotted drain efficiency can also be calculated using the following equation:

$$E = 1 - 0.918 \left\{ 1 - \frac{L_A}{L_R} \right\}^{1.769}$$

where:
E = efficiency, fraction
L_A = actual slot length, m
L_R = slot length required for no carryover, m

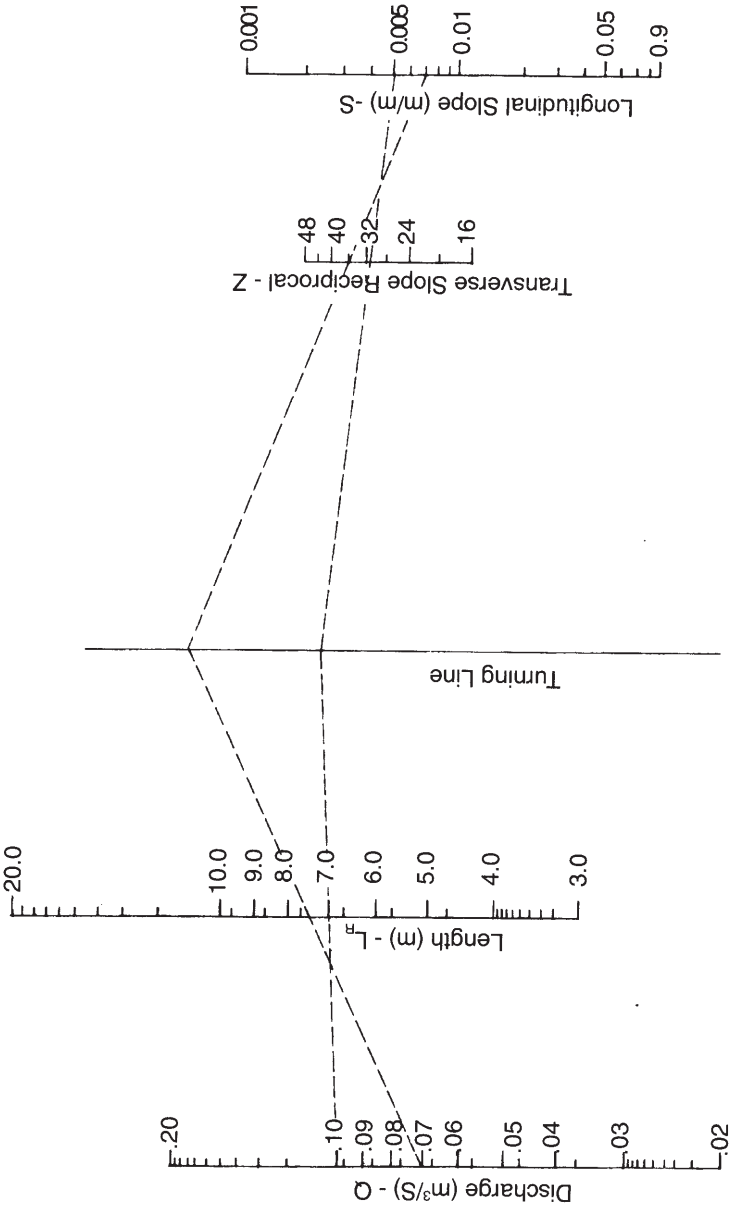

Figure 4.38 Slotted drain design nomograph.

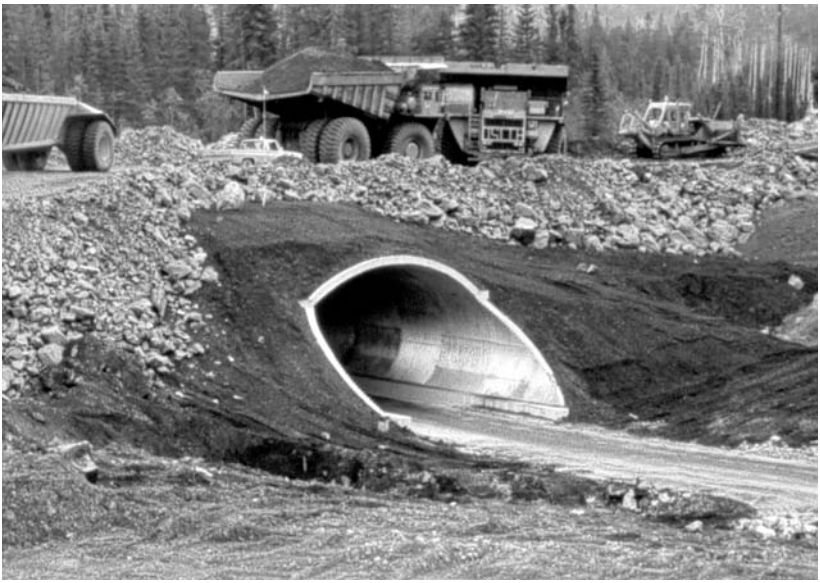

Step-bevel end treatment.

Structural plate CSP with concrete end treatment.

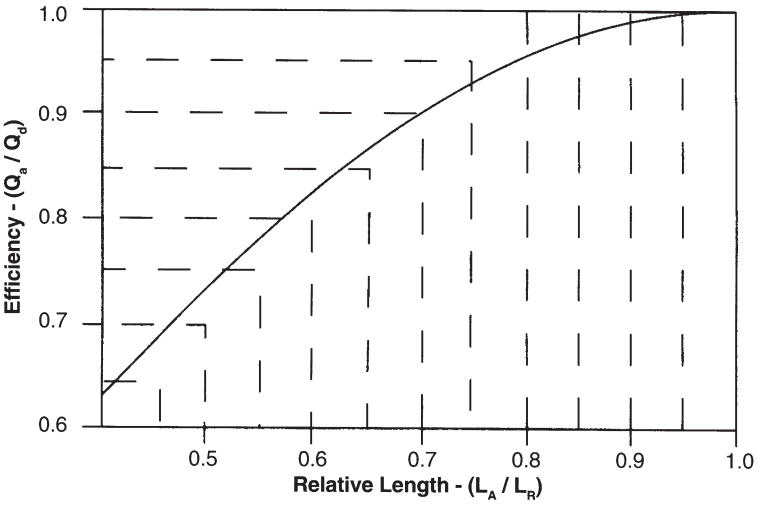

Example: if 20% carryover (Q_a / Q_d = 80%) is allowed, then only 58% (L_A / L_R) of the total slotted drain length is required resulting in a 42% savings in material and installation costs.

Figure 4.39 Slotted drain carryover efficiency.

The amount of carryover can be calculated using the following equation:

$$CO = Q_d (1 - E)$$

where: CO = carryover flow, m^3/s
Q_d = total design flow, m^3/s

Combining the above two equations results in the following equation for carryover flow:

$$CO = 0.918\, Q_d \left\{ 1 - \frac{L_A}{L_R} \right\}^{1.769}$$

When slotted drain is used for sag inlets, the required slot length should be based on the orifice equation, which is:

$$Q_d = C\, A \sqrt{2gd}$$

where: C = orifice coefficient = 0.61
A = open area of slot based on the width for which the hydraulic characteristics were measured (0.044 m), $m^2 = L_R$ (0.044)
g = gravitational constant, 9.806 m/s^2
d = maximum allowable depth of water in the gutter, m

Solving for the required slot length:

$$L_R = \frac{8.413\ Q_d}{\sqrt{d}}$$

For a slotted drain in a sag at the end of a series of drains on a grade, the flow to the drain will include any carryover from the immediately adjacent drain up grade. Unlike a drain-on-grade situation, a slotted drain in a sag will produce significant ponding if its capacity will not accommodate the design flow. Therefore, the actual length of sag inlets should be at least 2 times the calculated required length.

Carryover is not usually permitted at level grade inlets. In that case, the actual slotted drain length must be at least the required length.

Attractive end finishes can be developed.

BIBLIOGRAPHY

AASHTO, *A Policy on Geometric Design of highways and Streets*, American Association of State Highway and Transportation Officials, 444 N. Capitol St., N.W., Ste. 249, Washington, D.C. 20001, 1994.

AASHTO, "Design of Roadside Channels with Flexible Linings," *Hydraulic Engineering Circular No. 15*, American Association of State Highway and Transportation Officials, 444 N. Capitol St., N.W., Ste. 249, Washington, D.C. 20001.

AASHTO, *Highway Drainage Guidelines*, Vol. I - XIII, American Association of State Highway and Transportation Officials, 444 N. Capitol St., N.W., Ste. 249, Washington, D.C.20001,1999.

Anon., *Drainage Management Manual*, Ministry of Transportation, Ontario, 1997.

ASCE, "Design and Construction of Sanitary and Storm Sewers," American Society of Civil Engineers, 1986.

CSPI, *Modern Sewer Design*, Canadian Ed., Corrugated Steel Pipe Institute, 652 Bishop St. N., Unit 2A, Cambridge, Ontario, Canada N3H 4V6, 1996.

FHWA, "Capacity Charts for the Hydraulic Design of Highway Culverts," *Hydraulic Engineering Circular No. 10*, Federal Highway Administration, U.S. Department of Transportation, 400 7th Street SW, Washington, DC 20590.

FHWA, "Culvert Analysis Program HY-8," Federal Highway Administration, U.S. Department of Transportation, 400 7th Street SW, Washington, DC 20590

FHWA, "Hydraulic Charts for the Selection of Highway Culverts," *Hydraulic Engineering Circular No. 12*, Federal Highway Administration, Federal Highway Administration, U.S. Department of Transportation, 400 7th Street SW, Washington, D.C. 20590.

FHWA, "Hydraulic Design of Energy Dissipaters for Culverts and Channels," *Hydraulic Engineering Circular No. 14*, Federal Highway Administration, Federal Highway Administration, U.S. Department of Transportation, 400 7th Street SW, Washington, D.C. 20590, 1983.

FHWA, "Hydraulic Design of Highway Culverts," *Hydraulic Design Series No. 5*, Federal Highway Administration, U.S. Department of Transportation, 400 7th Street SW, Washington, D.C. 20590.

FHWA, "Hydraulic Design of Highway Culverts", Interactive Multimedia Document, FWHA-SA-96- 080, US Federal Highway Administration, U.S. Department of Transportation, 400 7th Street SW, Washington, DC 20590, 1996.

Smith, C. D., *Hydraulic Structures*, University of Saskatchewan Printing Services and University Bindery, Saskatoon, Saskatchewan, Canada,1995.

CHAPTER 5

CULVERT LOCATION

PRINCIPLES OF CULVERT LOCATION

Culvert location is defined as the selection of alignment and grade with respect to both roadway and stream. Proper location is important because it influences adequacy of the opening, maintenance of the culvert, protection from flooding of adjoining improvements, and possible washout of the roadway. Although every culvert installation is unique, the few principles set forth here apply in most cases.

A culvert is an enclosed channel serving as a continuation of and a substitute for an open stream where that stream meets an artificial barrier such as a roadway, embankment, or levee. It is necessary to consider abutting property, both as to ponding upstream and as to safe exit velocities in order to avoid undue scour or silting downstream.

An open stream is not always stable. It may be changing its channel, becoming straighter in some places and more sinuous in others. It may be scouring deeper in some places, silting in others. Change of land use upstream by clearing, deforestation, or development can change both the stability and flood flow of a stream.

Since a culvert is a fixed line in a stream, engineering judgment is necessary in properly locating the structure.

CSP installation with straight alignment.

Alignment

The first principle of culvert location is to provide the stream with a direct entrance and a direct exit. Any abrupt change in direction at either end will retard the flow and make a larger structure necessary.

A direct inlet and outlet, if not already existing, can be obtained by a channel change, a skewed alignment, or both. The cost of a channel change may be partly offset by a saving in culvert length or decrease in size. A skewed alignment requires a greater length of culvert, but is usually justified by improving the hydraulic condition and the safety of the road. See section on Pipe Length for Skew Angles at the end of this chapter.

The second principle of culvert location is to use reasonable precaution to prevent the stream from changing its course near the ends of the culvert. Otherwise the culvert may become inadequate, cause excessive ponding and possibly washout – any one of which can lead to expensive maintenance of the roadway. Steel end sections, riprap, grass, or paving will help protect the banks from eroding.

Culvert alignment may also be influenced by choice of a grade line. Methods of selecting proper alignment are illustrated in Figures 5.1 and 5.2.

At roadway intersections and private entrances, culverts should be placed in the direct line of the roadway ditch, especially where ditches are required to carry any considerable amount of storm water.

Culverts for drainage of cut-and-fill sections on long descending grades should be placed on a skew of about 45 degrees across the roadway. Thus the flow of water will not be retarded at the inlet.

Traditional CSP and Spiral Rib Pipe on highway 401 near Toronto, Ontario.

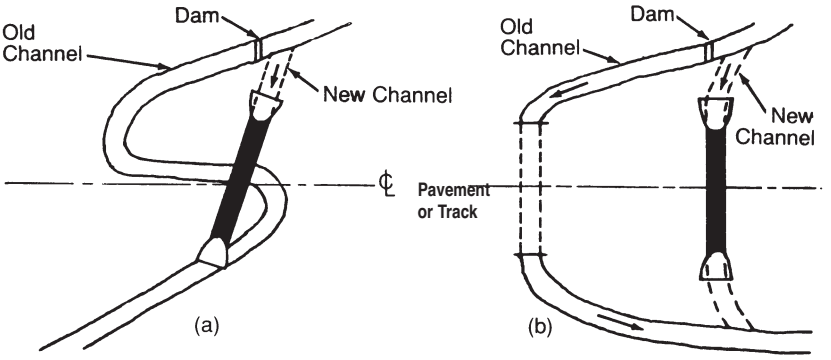

Figure 5.1 A channel change can improve alignment and provide more direct flow.

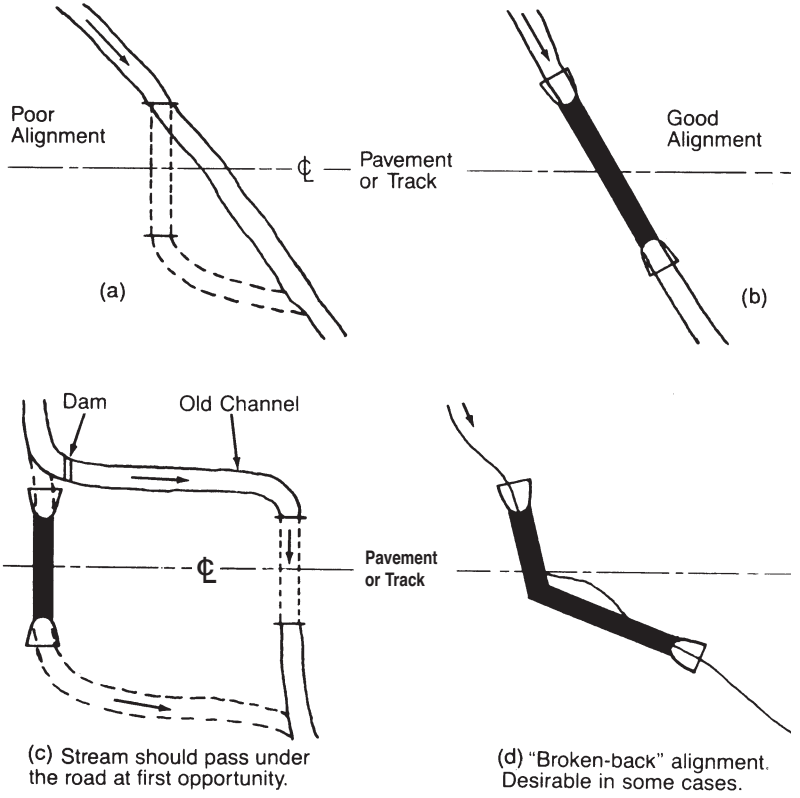

Figure 5.2 Various methods of obtaining correct culvert alignment.

A broken alignment under a roadway may be advisable on long culverts. Consideration should be given to entrance and exit conditions. Also, consider increasing the size of the structure to facilitate maintenance and removal of debris that the stream may carry during flood periods.

Changes in alignment may be accomplished by welded miter cuts for bends, either in profile or alignment. When the designer has determined the radius of curvature, the angle of the miter cut can then be determined. Gradual change in alignment can be accomplished by small angle changes at the joints or by field sweeping the coupled lengths of pipe.

Grade

The ideal grade line for a culvert is one that produces neither silting nor excessive velocities and scour, one that gives the shortest length, and one that makes replacement simplest (Figure 5.3).

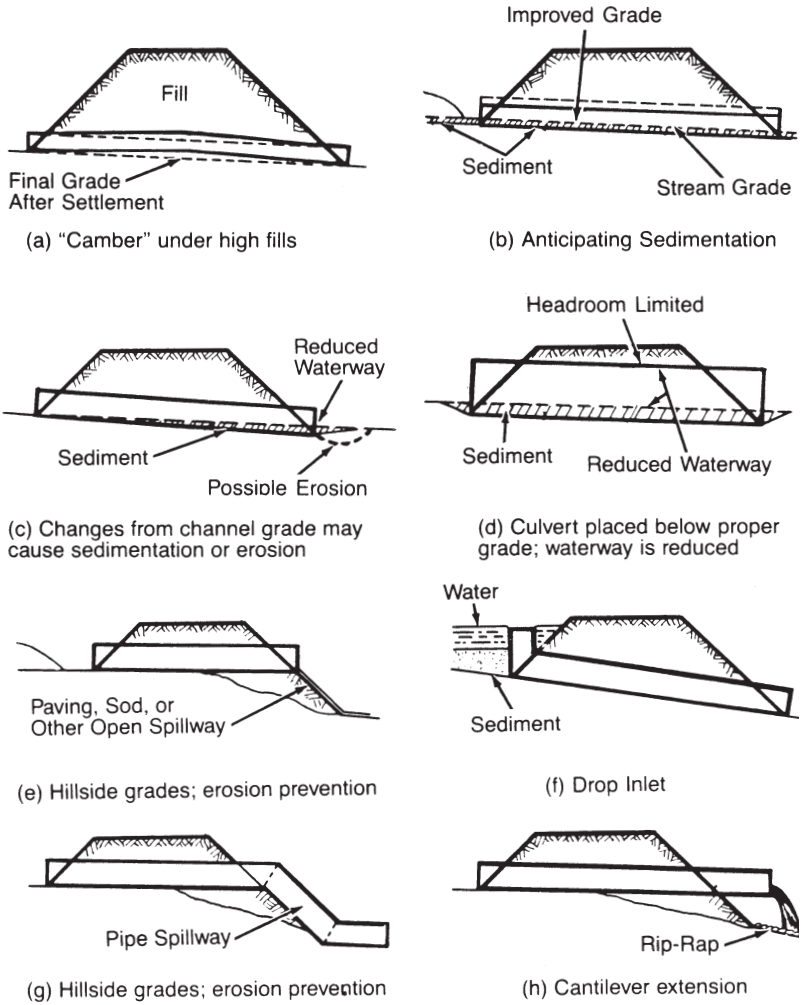

Figure 5.3 Proper culvert grades are essential to safe functioning of the structure.

Excessive velocities cause destructive scour downstream and to the culvert structure itself unless protected. Safe streambed velocities are given in Table 4.3 and 4.4, page 136.

Capacity of a culvert with a free outlet (not submerged) is not increased by placement on a slope steeper than its critical slope. (About 1 percent for a 2400 mm pipe.) The capacity is controlled by the amount of water that can get through the inlet.

On the other hand, the capacity of a pipe on a very slight gradient and with a submerged outlet is influenced by the head (difference in elevation of water surface at both ends). In this case, the roughness of the culvert interior, in addition to the velocity head and entrance loss, is a factor.

A slope of 1 to 2 percent is advisable to give a gradient equal to or greater than the critical slope, provided the velocity falls within permissible limits. In general, a minimum slope of 0.5 percent will avoid sedimentation.

In ordinary practice the grade line coincides with the average streambed above and below the culvert. However, deviation for a good purpose is permissible.

Spiral rib steel pipe stream diversion installation.

Culvert Length

The required length of a culvert depends on the width of the roadway or roadbed, the height of fill, the slope of the embankment, the slope and skew of the culvert, and the type of end finish such as end section, headwall, beveled end, drop inlet or spillway.

A culvert should be long enough so that its ends do not clog with sediment or become covered with a settling, spreading embankment.

A cross-sectional sketch of the embankment and a profile of the streambed is the best way to determine the required length of culvert needed. Lacking such a sketch, the length of a simple culvert under an embankment can be determined as follows:

CSP stream diversion.

To the width of the roadway (and shoulders) add twice the slope ratio times the height of fill at the center of the road. This is illustrated in Figure 5.4 in terms of the variables in the figure, B=C x H/V. The height of fill, C, should be measured to the flow line if headwalls are not to be used, and to the top of the culvert if headwalls or end sections are to be installed.

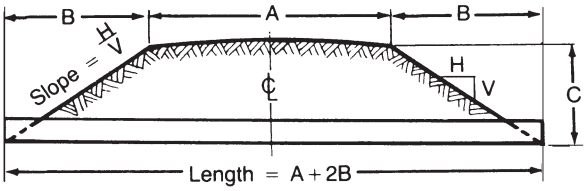

Figure 5.4 Computation of culvert length when flow line is on flat grade.

Example: A roadway is 12 m wide, has, two to one side slopes, and at the center of the road the height of fill to flow line is 2 m. The culvert length at the flow line is then 12 + 2[2(2/1)] = 20 m.

If the culvert is on a slope of 5 percent or more, it may be advisable to compute the sloped length in the manner shown in Figure 5.5.

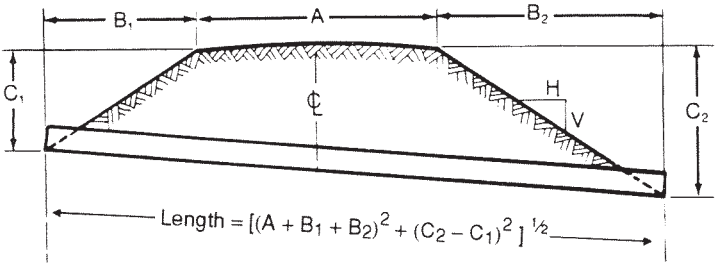

Figure 5.5 Determining culvert length on a steep grade.

Pipe Length for Skew Angles

When a culvert crosses the roadway at other than a right angle, the increased bottom center line length should be computed as follows:

First determine the length at right angles to the roadway (Figure 5.4 or 5.5). Then divide by the cosine of the angle between the normal and skewed direction (the skew angle).

Example: Assume a normal length of 20 m and an angle of 20 degrees skewed from the normal.

$$\text{Skew length} = \frac{20}{0.940} = 21.284 \text{ m} = L_S$$

Next, if skewed ends are required on the pipe, determine L' (Figure 5.6) by multiplying the pipe diameter by the tangent of the angle between the normal length and skew length and add this to the increased bottom center line length.

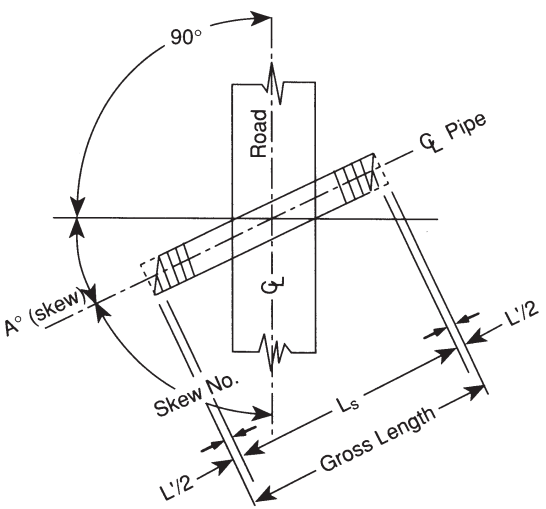

Figure 5.6 Determine gross length of pipe required from which to fabricate skewed pipe crossing.

Example: Assume pipe in previous example is 0.9 m diameter.

$$L' = 0.9\ (0.364) = 0.328 \text{ m}$$

$$\text{Gross Length} = 21.3 + 0.3 = 21.611 \text{ m}$$

The required length of pipe is 21.6 m.

Under certain conditions, as in the previous example, the ends of the structure may be cut to make them parallel to the center line of the road. For correct fabrication of corrugated steel culverts it is essential to specify the direction of flow as well as the skew angle or skew number (Figure 5.7).

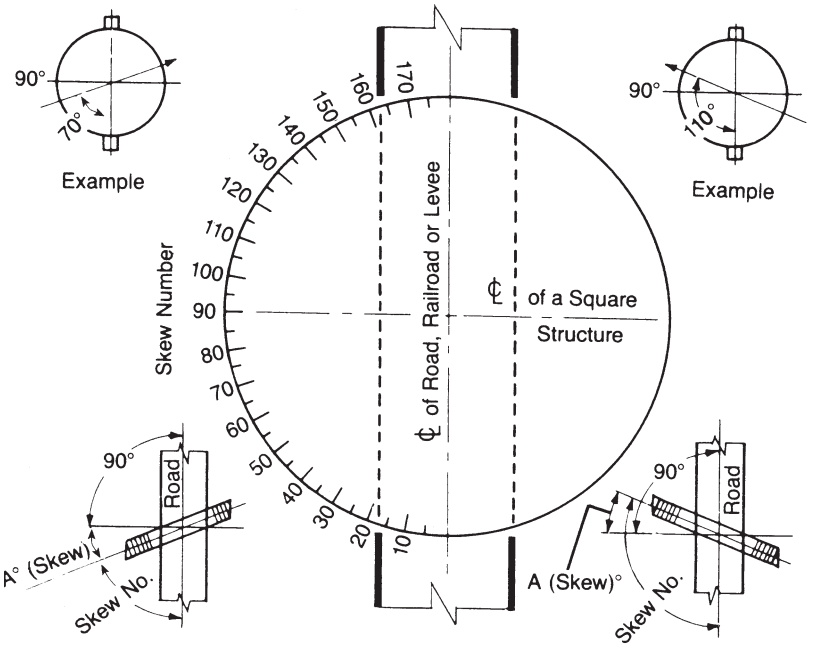

Figure 5.7 Diagram for method of properly specifying skewed culverts. The direction of flow should also be indicated for fabrication as a left or right.

DCSP box for a short span bridge.

BIBLIOGRAPHY

AASHTO, *Highway Drainage Guidelines,* Vol. I - XIII, American Association of State Highway and Transportation Officials, 444 N. Capitol St., N.W., Ste. 249, Washington, D.C. 20001, 1999.

CHAPTER 6

STRUCTURAL DESIGN

INTRODUCTION

Corrugated steel conduits, long recognized for outstanding structural strength under the heaviest of underground loadings, are now understood to be a complex composite – the result of soil and steel interaction.

Soil-steel interaction means that a flexible steel conduit acts with the surrounding soil fill to support the loads. Modern research has shown that the ideal underground structure places much of the load on the soil around and over it. Corrugated steel structures approach this ideal condition.

Design methods for buried corrugated steel pipe are turning more toward the all-important soil component of the composite soil-steel system. While still conservative in reference to the soil structure, the present design procedures recognize it and open the way to future developments.

Structural plate underpass and stream crossing. The sizes of these structures are 11.69 m span x 7.42 m rise horizontal ellipse and 6.94 m diameter round pipe respectively. The round pipe had 28.2 m of cover.

The design of corrugated steel pipe has evolved from the semiempirical Marston-Spangler method and the ring compression method to more sophisticated methods which recognize compressive failure by crushing or buckling instability. Bending moments and the development of plastic hinges are usually disregarded, although the current Canadian Highway Bridge Design Code (CHBDC) does account for combined bending moment and axial thrust during construction.

This handbook uses the traditional AISI Method for the design of structures with a diameter or span equal to or less than 3 m. The AISI Method can modify the wall thrust of the conduit in the ring compression method with an arching factor K, when the height of cover is greater than the span, and provides a calculation for elastic and inelastic buckling stress.

For structures with a diameter or span greater than 3 m, the AISI Method or the CHBDC method are used. The AISI method has served designers well for many

years, and can continue to be used unless the CHBDC method is specified. The CHBDC method provides a more up to date approach to the determination of thrust and buckling resistance, and is based on ultimate strength principles rather than working stress or service load design.

RESEARCH AND DEVELOPMENT OF BURIED STRUCTURES

Earliest strength tests on corrugated steel pipe were quite crude. The tests included circus elephants balanced on unburied pipe and threshing rigs placed over shallow buried pipe.

Laboratory soil box and hydraulic tests by Talbot, Fowler and others, followed later. Fill loads were measured on buried pipe and on their foundations at Iowa State College (Marston, Spangler and others, 1913) and at the University of North Carolina (Braune, Cain, Janda) in cooperation with the U.S. Bureau of Public Roads.

Large-scale field tests measuring dead loads were run in 1923 on the Illinois Central Railroad by the American Railway Engineering Association (AREA) (Figure 6.1). Measurements with earth pressure cells showed that flexible corrugated pipes carried only 60 percent of the 10.7 m column (or prism) of fill above it, while adjacent soil carried the remaining 40 percent of the load. These tests demonstrated for the first time that a flexible conduit and compacted earth embankment can combine to act as a composite structure.

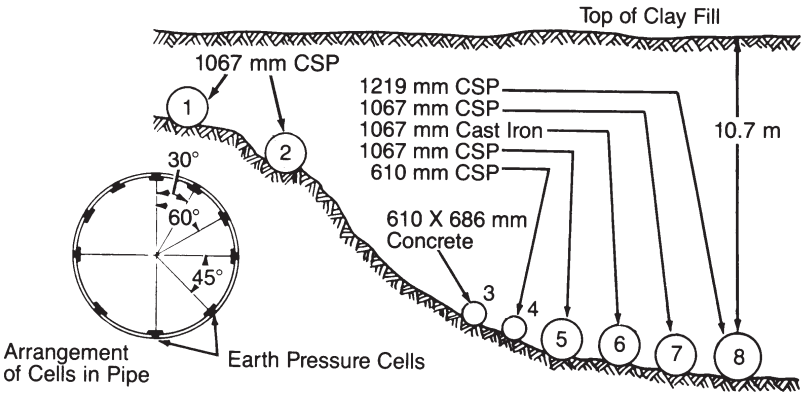

Figure 6.1 American Railway Engineering Association tests on culvert pipe.

Early efforts to rationalize the load-carrying performance of flexible conduits led to the concept of passive side pressures and the Iowa Formula for predicting deflection. Although seldom used for today's design, it has provided insight into the behavior of corrugated steel pipe.

In the 1960's the concept of a thin compression ring supported by soil pressures was introduced. This fundamental concept proved compatible with experience and provided a path to rational design criteria. The national interest in blast effects from nuclear devices supplied a wealth of research and development on buried flexible structures. This work clearly showed the potential for more efficient designs of

buried corrugated steel structures. Further extensive research was sponsored by the American Iron and Steel Institute, between 1967 and 1970, at Utah State University under the direction of Dr. Reynold K. Watkins. Procedures, results and conclusions are described in condensed form in Appendix A at the end of this chapter.

The State of California conducted a very significant research project in 1975. Called the D.B. culvert, it was a 3050 mm diameter structural plate pipe, with a 2.8 mm wall thickness, under almost 61 m of fill. It was perhaps the only such pipe drastically underdesigned and expected to fail. The performance data from this structure contributed greatly to the development and verification of new design tools.

Since then, several procedures have been developed using finite element methods: CANDE (Culvert Analysis, Design) is an FHWA (Federal Highway Administration) sponsored computer program by M. Katona, et al. The SCI (Soil/Culvert Interaction) Design Method, by J. M. Duncan, utilizes design graphs and formulas based on finite element analyses.

FHWA Report RD77-131 summarizes the status of Long Span Corrugated Structures. This new family of very large structures has extended the range of corrugated steel to spans over 15 m. Because standard design criteria were not fully applicable to long spans, special or modified design standards were established. This chapter includes the current long span criteria. Research and development on the effects of dead and live loads on the behavior of buried steel structures continues to be a subject of interest.

Stormwater detention tank.

MATERIALS

Steel and Corrugation Properties

Mechanical properties of sheet and plate for structural plate corrugated steel pipe, and deep corrugated structural plate products are provided in Table 6.1.

Section properties for corrugated steel pipe, spiral rib pipe and structural plate corrugated steel pipe products are given in Table 6.2 and Table 6.3.

Ultimate seam strengths for riveted CSP, structural plate CSP, deep corrugated structural plate are provided in Tables 6.4a through 6.4d.

Table 6.1 Mechanical properties of sheet and plate for structural plate products

Steel	Min Tensile Strength, MPa	Min Yield Strength, MPa	Min Elongation in 50 mm	Modulus of Elasticity, MPa
SPCSP	290	195	30%	200×10^3
DCSP	380	275	25%	200×10^3

Note: These mechanical properties are for virgin material prior to corrugating and galvanizing and are conducted in accordance with the requirements of ASTM Standard A370. Corrugated steel with mechanical properties greater than the minimum requirements may be used. The minimum yield strength used for design shall be 230 MPa for structural plate and 300 MPa for deep corrugated structural plate, which shall be achieved through cold working.

Table 6.2 Section properties for corrugated steel pipe, spiral rib pipe and structural plate corrugated steel pipe products

Corrugation profile, mm	Specified Thickness, mm											
	1.0	1.3	1.6	2.0	2.8	3.0	3.5	4.0	4.2	5.0	6.0	7.0
	Moment of Inertia, I, mm^4/mm											
38x6.5	3.70	5.11	6.46	8.58								
68x13	16.49	22.61	28.37	37.11	54.57		70.16		86.71			
76x25	75.84	103.96	130.40	170.40	249.73		319.77		393.12			
125x25			133.30	173.72	253.24		322.74		394.84			
152x51						1057.25		1457.56		1867.12	2278.31	2675.11
19x19x190*			58.83	77.67	117.17							
	Cross-sectional Wall Area, A, mm^2/mm											
38x6.5	0.896	1.187	1.484	1.929								
68x13	0.885	1.209	1.512	1.966	2.852		3.621		4.411			
76x25	1.016	1.389	1.736	2.259	3.281		4.169		5.084			
125x25			1.549	2.014	2.923		3.711		4.521			
152x51						3.522		4.828		6.149	7.461	8.712
19x19x190*			1.082	1.513	2.523							
	Radius of Gyration, r, mm											
38x65	2.063	2.075	2.087	2.109								
68x13	4.316	4.324	4.332	4.345	4.374		4.402		4.433			
76x25	8.639	8.653	8.666	8.685	8.724		8.758		8.794			
125x25			9.277	9.287	9.308		9.326		9.345			
152x51						17.326		17.375		17.425	17.475	17.523
19x19x190*			7.375	7.164	6.815							

* Ribbed pipe. Properties are effective values.

Table 6.3

Section properties for deep corrugated structural plate products

Type I: **381 x 140 mm** corrugation profile

Specified Thickness mm	Moment of Inertia, I mm^4/mm	Area, A mm^2/mm	Radius of Gyration, r mm	Plastic Section Modulus, Z mm^3/mm
2.81	9096.2	3.720	49.45	165.25
3.53	11710.7	4.783	49.48	212.67
4.27	14333.9	5.846	49.51	260.15
4.79	16039.0	6.536	49.53	291.03
5.54	18743.3	7.628	49.57	339.93
6.23	21445.9	8.716	49.60	388.77
7.11	24164.6	9.808	49.63	437.85

Type II: **400 x 150 mm** corrugation profile

Specified Thickness mm	Moment of Inertia, I mm^4/mm	Area, A mm^2/mm	Radius of Gyration, r mm	Plastic Section Modulus, Z mm^3/mm
4.3	16186	5.792	52.86	273.62
5.0	19060	6.811	52.90	322.05
6.0	23154	8.260	52.95	391.01
7.0	27071	9.640	52.99	456.91
8.0	30759	10.935	53.04	518.88

Table 6.4a

Riveted CSP - Ultimate longitudinal seam strength (kN/m)

Specified Thickness mm	8 mm Rivets		10 mm Rivets			12 mm Rivets
	68 x 13 mm		68 x 13 mm		76 x 25 mm	76 x 25 mm
	Single	Double	Single	Double	Double	Double
1.3	148					
1.6	236	274			387	
2.0	261	401			499	
2.8			341	682		769
3.5			356	712		921
4.2			372	746		1023

Table 6.4b

152 x 51 mm bolted structural plate
Ultimate longitudinal seam strength (kN/m)

Specified Thickness mm	Bolt per Corrugation			Bolt Diameter mm
	2	3	4	
3.0	745			19
4.0	1120			19
5.0	1470	1650		19
6.0	1840	2135		19
7.0	2100	2660	3200	19

Table 6.4c

Ultimate longitudinal seam strength (kN/m)
Type I: **381 x 140 mm** bolted structural plate

Specified Thickness mm	6 Bolts per Corrugation		Bolt Diameter mm
	S_S†	S_M*	
3.53	905	Consult Manufacturer	19
4.27	1182		19
4.79	1357		19
5.54	1634		19
6.32	1926		19
7.11	2101		19

† per ASTM A796.
* Proprietary design values.

Table 6.4d

Ultimate longitudinal seam strength (kN/m)
Type II: **400 x 150 mm** bolted structural plate

Specified Thickness mm	Bolt Diameter mm	Compressive Seam Strength* S_S kN/m
4.0	19	1191
5.0	19	1735
6.0	19	2063
7.0	19	2238
8.0	19	2238
7.0	22	2688
8.0	22	2688

* Proprietary design values.

Soil Properties

Soils are classified in accordance with Table 6.5. The secant modulus for various soils is in Table 6.6.

Table 6.5

Soil classification for E_S

Soil Group	Grain Size	Soil Types	Unified Soil Classification Symbol*
I	Coarse	Well Graded Gravel or Sandy Gravel	GW
		Poorly Graded Gravel or Sandy Gravel	GP
		Well Graded Sand or Gravelly Sand	SW
		Poorly Graded Sand or Gravelly	SP
II	Medium	Clayey Gravel or Clayey-sandy Gravel	GC
		Clayey Sand or Clayey Gravelly Sand	SC
		Silty Sand or Silty Gravelly Sand	SM

* According to ASTM D2487.92 *Standard Classification of Soils for Engineering Purposes (Unified Soil Classification System)*

Table 6.6 Values of E_s for various soils

Soil Group Number*	Standard Proctor Density**	Secant Modulus of Soil, E_s, MPa
I	85%	6
	90%	12
	95%	24
	100%	30
II	85%	3
	90%	6
	95%	12
	100%	15

* According to Table - 6.5

** According to ASTM D698-91 *Test Method for Laboratory Compaction Characteristics of Soil Using Standard Effort*

Material Unit Weights

The unit weights of various materials are listed in Table 6.7.

Table 6.7 Unit material weights

Material	Unit Weight kN/m^3
Bituminous Wearing Surface	23.5
Clay and Silt	19.0
Coarse Grained Soil, Rock Fill	21.0
CHBDC - Coarse Grained (Granular) Soil	22.0
Crushed Rock, Glacial Till	22.0
Fine Grained or Sandy Soil	20.0

DESIGN OF BURIED STRUCTURES WITH SPANS UP TO 3 m

A procedure for the structural design of pipe is provided by ASTM A 796 / A 796M, "Standard Practice for Structural Design of Corrugated Steel Pipe, Pipe-Arches, and Arches for Storm and Sanitary Sewers and Other Buried Applications." The practice applies to structures installed in accordance with ASTM A 798 / A 798M, "Standard Practice for Installing Factory-Made Corrugated Steel Pipe for Sewers and Other Applications", and ASTM A 807 / A 807M, "Standard Practice for Installing Corrugated Steel Structural Plate Pipe for Sewers and Other Applications." Another similar method is provided by the American Association of State Highway Transportation Officials (AASHTO) Standard Specifications for Highway Bridges. These practices are frequently referenced in project specifications.

In 1967, the American Iron and Steel Institute (AISI) published the first edition of the Handbook of Steel Drainage and Highway Construction Products. The handbook outlined a working stress or service load method for the structural design of corrugated steel pipes and is the basis for most height of cover tables in use today. In this, the second Canadian Edition, the AISI method will be used for the structural design of corrugated steel pipes with a diameter or span that is less than or equal to 3 m.

The design procedures in ASTM A 796 and in AASHTO are similar to the AISI method described below, but they do differ in several respects. For the dead load, ASTM and AASHTO use the weight of the entire prism of soil above a horizontal plane at the top of the pipe and do not recognize the load reduction factor. They also use a different adaptation of the buckling equations. They provide separate flexibility factors for both trench and embankment conditions, some of which are

more conservative than those listed here. They also include more specific information on acceptable soil types. In spite of all these differences, the resulting designs will usually not differ greatly from those provided in this chapter.

Minimum Clear Spacing Between Structures

When two or more steel drainage structures are installed in parallel lines, the space between them must be adequate to allow proper backfill placement, particularly in the haunch and compaction area. The minimum spacing requirement depends upon the shape and size of the structure as well as the type of backfill materials,, as indicated in Figure 6.2.

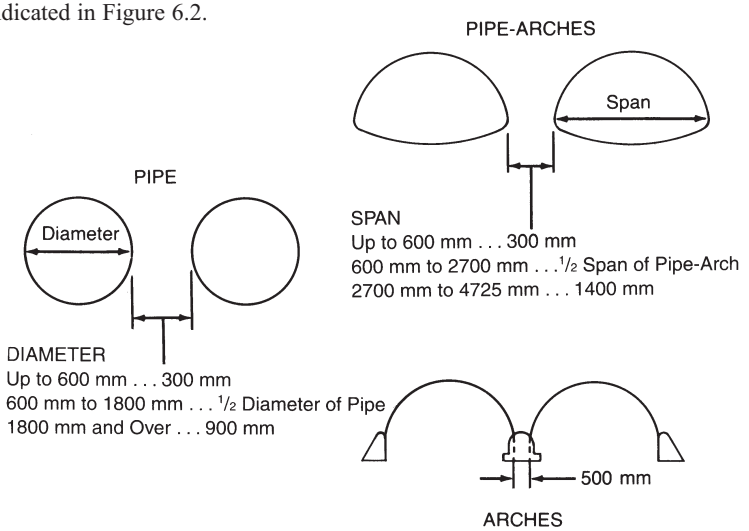

Figure 6.2 Minimum permissible spacings for multiple installations. Spacing can be decreased if CLSM is used as backfill.

Loads

Underground conduits are subject to two principal kinds of loads:

1. Dead loads developed by the trench backfill above, and stationary superimposed uniform or concentrated surface loads; and
2. Live loads caused by temporary moving loads, including impact.

Dead Loads

The dead load is considered to be the soil prism over the pipe:

$$DL = \gamma H$$

where: DL = unit pressure of a soil prism acting on the horizontal plane at the top of the pipe, kPa
γ = unit weight of the soil, kN/m^3
H = height of cover over the pipe, m

Live Loads

The live load (LL) is that portion of the weight of vehicles, trains, or aircraft moving over the pipe, that is distributed through the soil to the pipe. Live loads are greatest when the height of cover over the top of the pipe is small and decrease as the fill height increases.

Quarry underpass under high cover.

Live Loads Under Highways

Live load pressures for AASHTO H-20 and AASHTO H-25 highway loadings, including impact effects, are listed in Table 6.8. Note that these live loads are obtained by positioning the heaviest axle of the design truck centrally above the crown of the pipe at finished grade level. The axle loads are 142.3 kN and 177.9 kN respectively.

Live load pressures for the CAN/CSA-S6-06 design truck, CL-625, are also listed Table 6.8. These live loads are obtained by centering the dual axle of the design truck centrally above the crown of the pipe at finished grade level. Each axle weighs 125 kN. Both single truck and two truck load cases must be considered, and are reflected in the numbers shown.

Table 6.8 Highway and railway live loads (LL)[1]

Highway Loading				Railway Loading	
Depth of Cover,	LL Pressure, KPa			Depth of Cover,	LLPressure, KPa
m	CL-625[2]	H-20[3]	H-25[3]	m	E•80
0.30	61	86	109	0.6	182
0.50	46	56	75	1.0	147
0.75	34	34	46	1.2	133
1.00	26	25	31	1.5	115
1.25	20	17	22	2.0	91
1.50	16	13	16	3.0	53
1.75	14	10	12	4.0	34
2.00	12	8	10	6.0	15
2.25	11	6	8	8.0	7
2.50	10	5	6	9.0	5
2.75	9	-	5		
3.00	8	-	-		
3.50	7	-	-		
4.00	6	-	-		
4.50	5	-	-		

Notes: 1. Neglect live load when less than 5 kPa; use dead load only.
2. Load distribution through soil according to CAN/CSA-S6-06 (unfactored $\sigma_L m_f$, including dynamic load allowance). Note that there is a separate vehicle for Ontario, in which the axles are heavier.
3. Load distribution through soil according to ASTM traditional method (including impact).

Live load pressures are greatest at smaller heights of cover and decrease with increasing cover. Dead load pressures increase with increasing cover. As shown in Figure 6.3, the combined H-20 live load and dead load is lowest at a cover of about 1.5 m.

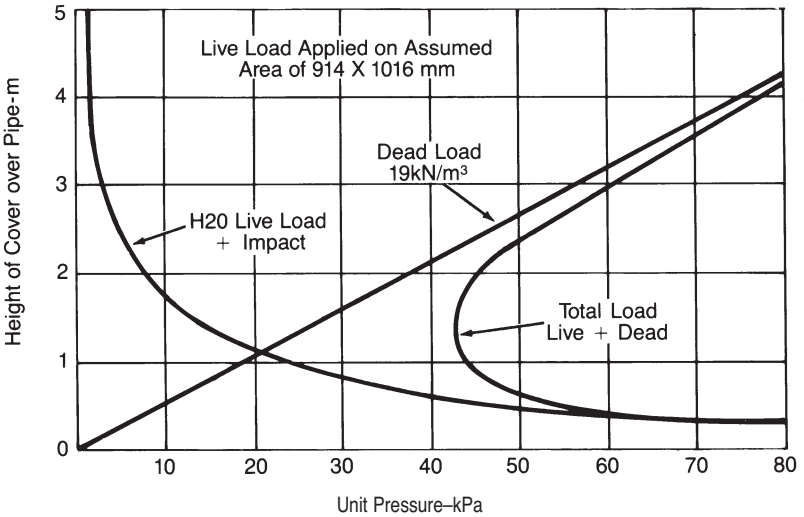

Figure 6.3 Combined H20 highway live load and dead load.

Live Loads Under Railways

Live load pressures for E80 railway loadings, including impact, are also listed in Table 6.8. As shown in Figure 6.4, the combined E 80 live load and dead load is a minimum at about 3.8 m of cover.

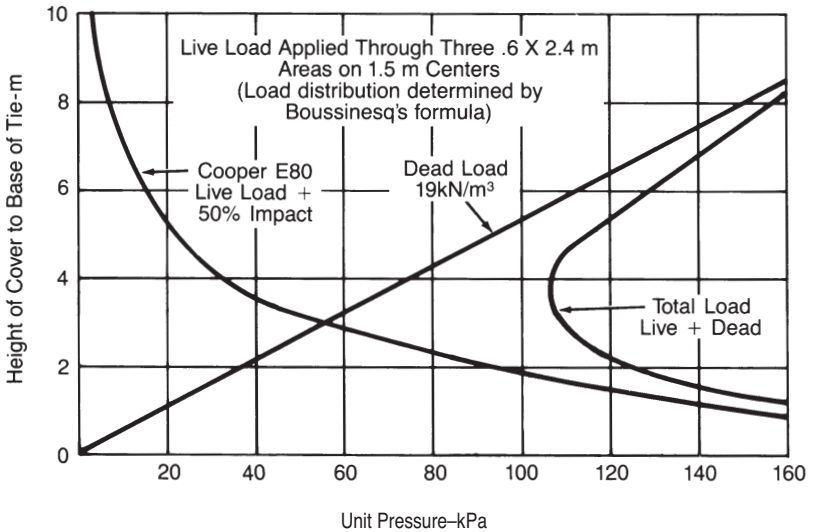

Figure 6.4 Combined E80 railway live load and dead load.

Live Loads Under Airport Runways
Live load pressures for aircraft vary because of the many different wheel configurations and weights. Such pressures must be determined for the specific aircraft for which the installation is designed. The Federal Aviation Administration's publication, "Airport Drainage", provides details.

Impact Loads
Loads caused by the impact or dynamic effects of moving traffic are important only at low heights of cover. Impact load allowances have been included in the live load pressures listed in Table 6.8.

Design Process

The structural design process consists of the following:

1. Check minimum allowable cover.
2. Select the degree of backfill compaction to be required.
3. Calculate the design pressure.
4. Compute the ring compression in the pipe wall.
5. Calculate the allowable compressive stress.
6. Determine the thickness required.
7. Check minimum handling stiffness.
8. Check seam strength requirements (when applicable).
9. Check special considerations for pipe-arches and arches.

1. Minimum Cover
Satisfactory minimum cover requirements have been formulated for corrugated steel pipe and pipe-arches with a diameter or span equal to or less than 3m, designed in accordance with the AISI method. These are based on long-time observations by the corrugated steel pipe industry and regulatory agencies, of structure performance under live loads. From these field observations, the minimum cover requirement was established as a function of shape, loading and corrugation size; values typically used are span divided by either 6 or 8 for highway applications, and span divided by 4 for railway applications. Structure specific minimum cover requirements are outlined in "Height of Cover Tables for Corrugated Steel Conduits", later in this chapter.

Note that this minimum cover is not always adequate during construction. When construction equipment, frequently heavier than traffic loads for which the pipe has been designed, is to be driven over or close to the buried structure, it is the responsibility of the contractor to provide additional cover to avoid damage to the pipe. The minimum allowable cover for heavy construction loads can be based on structural design calculations or the guidelines presented in Table 6.9.

Table 6.9 General guidelines for minimum cover required for heavy off-road construction equipment

Pipe Span, mm	Minimum Cover (mm) for Indicted Axle Loads (tonnes)*			
	8 - 22	22 - 34	34 - 50	50 - 68
300 - 1050	600	760	900	900
1200 - 1830	900	900	1050	1200
1980 - 3050	900	1050	1200	1200
3200 - 3660	1050	1200	1370	1370

* Minimum cover may vary, depending on local conditions. The contractor must provide the additional cover required to avoid damage to the pipe. Minimum cover is measured from the top of the pipe to the top of the maintained construction roadway surface.

2. Backfill Compaction

Select a percent compaction of pipe backfill for design. The value chosen should reflect the importance and size of the structure, and the quality of backfill material and its installation that can reasonably be expected. The recommended value for routine use is 85% Standard Proctor Density. This assumed value is conservative for ordinary installations in which most specifications call for compaction to 90%. However, for more important structures and higher fill situations, select a higher quality backfill and higher compaction, and require the same in construction. This will increase the allowable fill height and may save on the pipe thickness.

3. Design Pressure

When the height of cover is equal to or greater than the span or diameter of the structure, the load factor chart, Figure 6.5, is used to determine the percentage of the total load acting on the pipe. For routine use, the 85% Standard Proctor Density soil value will result in a factor of 0.86. The load factor, K, is applied to the total load to obtain the design pressure, P_v, acting on the pipe. If the height of cover is less than one pipe diameter, the total load is assumed to act on the pipe (K = 1.0).

The load on the pipe becomes:

$$P_v = K\,(DL + LL), \text{ when } H \geq S$$
$$P_v = (DL + LL), \text{ when } H < S$$

where: P_v = design pressure, kPa
K = load factor
DL = dead load, kPa
LL = live load, kPa
H = height of cover, m
S = span or diameter, m

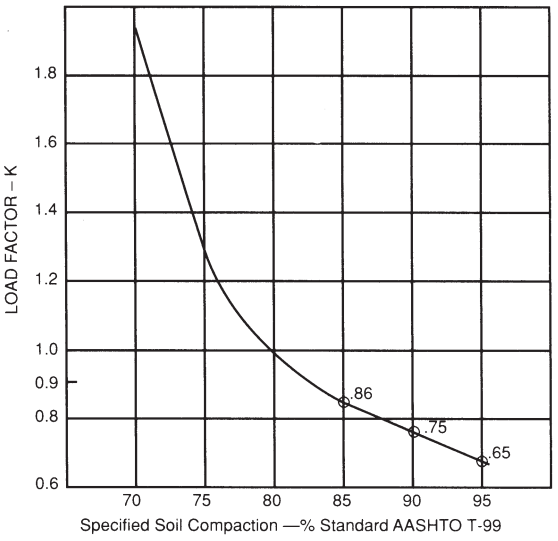

Figure 6.5 Load factors for CSP in backfill compacted to indicated density.

4. Ring Compression

The compressive thrust in the pipe wall is equal to the radial pressure acting on the wall multiplied by the wall radius, or:

$$C = P \bullet R$$

This thrust, called ring compression, is the force carried by the pipe wall. The ring compression force acts tangentially to the pipe wall. For conventional structures in which the top arc approaches a semicircle, it is convenient to substitute half the span for the wall radius.

Then: $$C = P_v \bullet \frac{S}{2}$$

where: C = ring compression, kN/m
P_v = design pressure, kPa
S = span or diameter, m

5. Allowable Wall Stress

The ultimate compressive stress, f_b, for corrugated steel structures with backfill compacted to 85% Standard Proctor Density and a yield strength of 230 MPa, are shown in Figure 6.6. The ultimate compression in the pipe wall is expressed by the following equations which represent the three behavioural zones that all pipes would be expected to be governed by. The first is the specified yield strength of the steel, which represents the *zone of wall crushing* or *yielding*. The second represents the *interaction zone of yielding and ring buckling*. The third represents the *ring buckling zone.*

$$f_b = f_y = 230, \text{ when } \frac{D}{r} < 294$$

$$f_b = 279.6 - (574.3 \times 10^{-6}) \left(\frac{D}{r}\right)^2, \text{ when } 294 \leq \frac{D}{r} \leq 500$$

$$f_b = \frac{(34 \times 10^6)}{\left(\frac{D}{r}\right)^2}, \text{ when } \frac{D}{r} > 500$$

where: f_b = ultimate compressive stress, MPa
f_y = yield strength, MPa
D = diameter or span, mm
r = radius of gyration of the pipe wall (see Tables 6.2 or 6.3), mm

A factor of safety of 2 is applied to the ultimate wall stress to obtain the allowable stress, f_c:

$$f_c = \frac{f_b}{2}$$

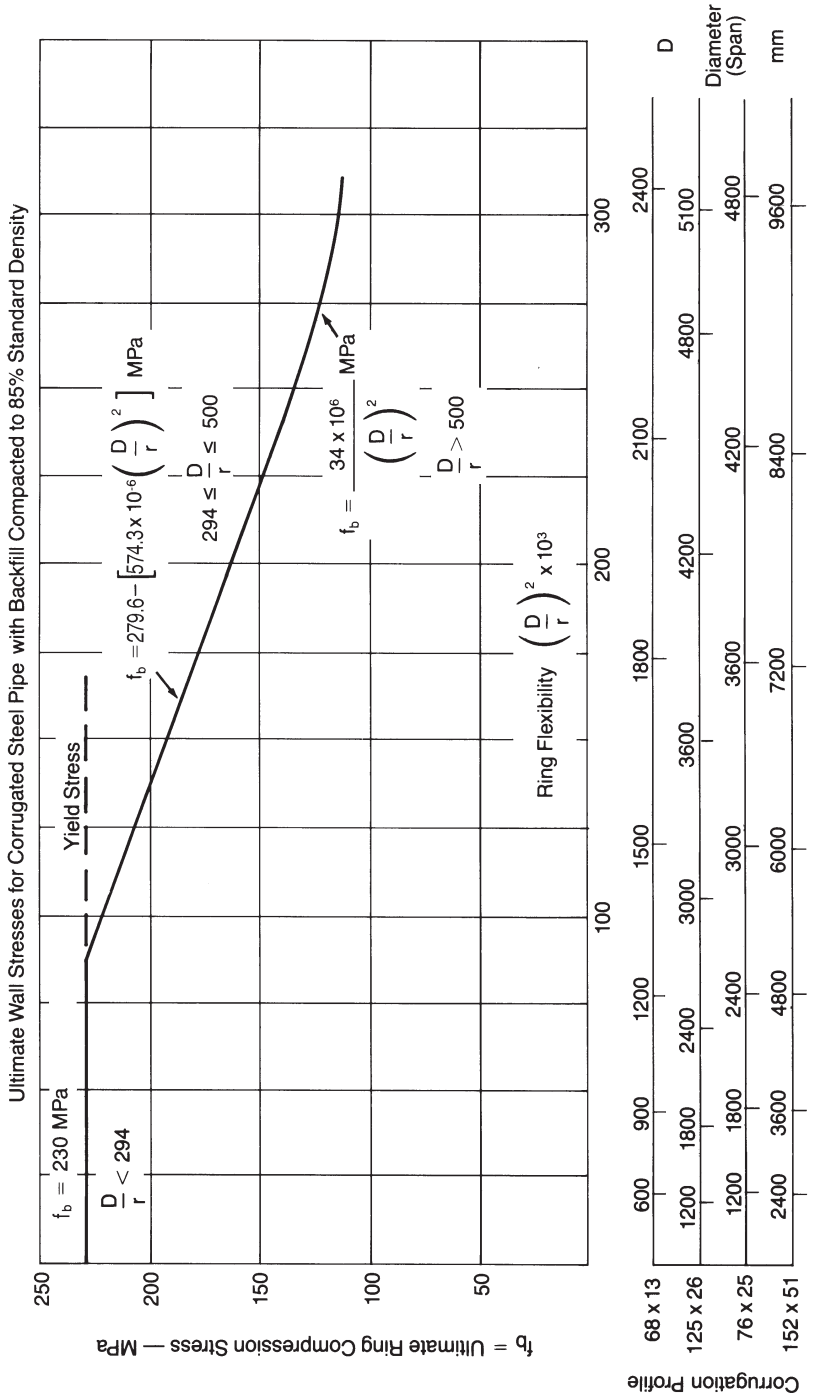

Figure 6.6 Ultimate compressive wall stress for CSP.

6. Wall Thickness

A required wall area, A, is computed using the calculated compression in the pipe wall, C, and the allowable stress, f_c.

$$A = \frac{C}{f_c}$$

where: A = required area in the pipe wall, mm^2/mm
C = ring compression, kN/m
f_c = allowable stress, MPa

From Table 6.2 or 6.3, select the wall thickness that provides the required area. The properties used in steps 5 and 6 (r, A) must be for the same corrugation.

7. Handling Stiffness

Minimum pipe stiffness requirements, for practical handling and installation without the need for special shape control measures, have been established through experience and have been formulated. The resultant flexibility factor, FF, limits the size of pipe for each combination of corrugation and metal thickness.

$$FF = \frac{D^2}{EI}$$

where: E = modulus of elasticity = 200×10^3 MPa
D = diameter or span, mm
I = moment of inertia of the pipe wall (see Tables 6.2 or 6.3), mm^4/mm

Recommended maximum allowable values of FF for ordinary round and underpass pipe installations are as follows:

68 x 13 mm corrugation,	FF ≤ 0.245 mm/N
125 x 25 mm corrugation,	FF ≤ 0.188 mm/N
76 x 25 mm corrugation,	FF ≤ 0.188 mm/N
152 x 51 mm corrugation,	FF ≤ 0.114 mm/N

The maximum allowable values of FF for pipe-arch and arch shapes are increased as follows:

Pipe-Arch	FF ≤ 1.5 x FF shown for round pipe
Arch	FF ≤ 1.5 x FF shown for round pipe

Higher values can be used with special care or where experience suggests a higher value is appropriate. Trench conditions, as in the case of storm sewer design, is one example where higher allowable values are appropriate. Aluminum pipe experiences are another. For example, the flexibility factor permitted for aluminum pipe in some specifications is more than twice that recommended above for steel. This has come about because aluminum has only one-third the stiffness of steel, the modulus of elasticity for aluminum being approximately 67×10^3 MPa compared to 200×10^3 MPa for steel. Where this degree of flexibility is acceptable in aluminum, it will be equally acceptable in steel.

For spiral rib pipe, a somewhat different approach is used. To obtain better control, the flexibility factors are varied with corrugation profile, sheet thickness and type of installation, as shown in Table 6.10. The height of cover tables included in

this handbook (Table HC-11 and HC-12) are based on a trench-like installation. Since spiral rib pipe is mostly used for storm sewers, in which a trench-like installation is the normal installation method, this covers most applications. A note accompanying the table directs the user to this part of the handbook (Table 6.10) or to the ASTM specification for guidance on embankment-type (Type I) installations. The height of cover table also includes an indication of those larger diameter pipes which require the use of specific backfill materials and special attention to shape control during installation.

Table 6.10 Allowable flexibility factors for spiral rib pipe, **19 x 19 x 190** rib profile

Installation Type	Flexibility Factor, mm/N		
	Thickness, mm		
	1.6	2.0	2.8
I	0.175	0.192	0.219
II	0.212	0.232	0.266
III	0.296	0.324	0.371

Installation types, as shown in Table 6.10, are:

Type I Installations can be an embankment or fill condition. Installations shall meet ASTM A798 requirements. ML and CL materials are typically not recommended. Compaction equipment or methods that cause excessive deflection, distortion, or damage shall not be used.

Type II Installations require trench-like conditions where compaction is obtained by hand, or walk behind equipment, or by saturation and vibration. Backfill materials are the same as for TYPE I installations. Special attention should be paid to proper lift thicknesses. Controlled moisture content and uniform gradation of the backfill may be required to limit the compaction effort while maintaining pipe shape.

Type III Installations have he same requirements as TYPE II installations except that the backfill materials are limited to clean, non-plastic materials that require little or no compaction effort (GP, SP), or to well graded granular materials classified as GW, SW, GM, SM, GC, or SC with a maximum plasticity index (PI) of 10. Maximum loose lift thickness shall be 200 mm. Special attention to moisture content to limit compaction effort may be required. Soil cement or cement slurries may be used in lieu of the selected granular materials.

8. Seam Strength

Most pipe seams develop the full yield strength of the pipe wall. However, there are exceptions. Tables 6.4a and b show those standard riveted and bolted seams (underlined) which do not develop a yield strength equivalent to f_y = 230 MPa. The allowable ring compression accounting for the seam strength considerations, is the ultimate seam strength, shown in Tables 6.4a and 6.4b, divided by the factor of safety of 2.0. Since helical lockseam and continuously-welded-seam pipe have no longitudinal seams, there is no seam strength check for these types of pipe.

9. Special Considerations for Pipe-Arches and Arches

(a) Pipe-Arches

Pipe-arches generate radial corner pressures as illustrated in Figure 6.7. These pressures, which are greater than the applied pressure at the top of the structure, must be limited to the allowable bearing pressure of the soil. This often becomes the limiting design factor, rather than structural strength. Special backfill at the corners, such as crushed stone or controlled low strength material, can extend these limitations. A maximum corner pressure of 300 kPa is suggested for routine use, although the adequacy of the foundation should be confirmed.

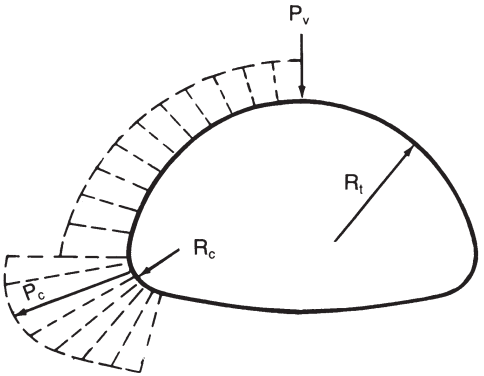

Figure 6.7 Pressure on the pipe-arch varies with radius and is greatest at the corners.

The corner pressure can be calculated as follows. The ring compression force, C, is the same at any point around the structure ignoring the bending strength of the pipe wall and the longitudinal distribution of pressure. From the familiar relationship $C = P_v \times R$, the pressure normal to the wall is inversely proportional to the radius ($P \propto 1/R$). Based on this relationship, the corner pressure, P_c, would be:

$$P_c = \frac{R_t}{R_c} P_v = \frac{R_t}{R_c} (LL + DL)$$

where: P_c = pressure acting on soil at the corners, kPa
R_t = radius of the crown, mm
R_c = radius of the corner, mm
LL = live load pressure, kPa
DL = dead load pressure, kPa

However, this relationship is overly conservative for live loads, such as wheel loads, that are not uniformly distributed over the full pipe length. As the ring compression force generated at the top of the pipe-arch by live loads is transmitted circumferentially down toward the corner region, it is also distributed along the length of the pipe. Thus, the length of the corner region that transmits the live load pressures into the soil is much greater than the length of pipe over which they were initially applied. The corner pressure is therefore calculated as:

$$P_c = \frac{R_t}{R_c} (C_l \bullet LL + DL)$$

where: C_l = longitudinal live load distribution factor

This is the procedure that was used to calculate the height-of-cover limits for pipe-arches in this Handbook. Furthermore, the live load was used without impact because (1) impact loads dissipate between the point on the structure where the load is applied and the corner region, and (2) bearing failures are progressive failures over a significant time period as opposed to the brief time of an impact loading. However, the full live load pressure (including impact and not modified by the C_l factor) should continue to be used to design the pipe wall.

Equations for C_l have been derived for standard highway and railway loadings.

H-20 and H-25 Live Loads

The live load pressures for the H-20 and H-25 live loads have traditionally been based on load application through an assumed 300 mm thick pavement area measuring 914 mm by 1016 mm. The load is distributed at 0.875 to 1 (horizontal to vertical) through the earth fill. In other words, the pressure area at a particular depth has an additional length or width, in addition to the length or width of the loaded area at the surface, of 1.75 times the height of cover.

Figure 6.8 shows how the load is distributed from the wheel loads over a pipe-arch. The pressure, at any height-of-cover, h, below the 1016 mm wide area, is spread over a distribution length L_1 a the top of the structure. The stress in the pipe wall, from this pressure, also spreads longitudinally. the length of the corner which transmits the wheel load is L_2. The reaction length includes an increase of 1.75 times the arc length from the top of the structure to the corner. This arc length can be approximated as one quarter of the circumference of a round pipe having a diameter which is the same as the span of the pipe-arch (add 1.75 x π x span / 4 = 1.37 x span). No overlap of the reaction lengths from the individual wheel loads occurs until L_2 exceeds 1829 mm. When the height of cover exceeds 765 mm, the pressure sones at the top is then L_1 + 1829 and the reaction length is L_2.

The value of C_l is :

$C_l = L_1/L_2$ when $L_2 \leq 1829$ mm

$C_l = 2L_1/L_3$ when $L_2 > 1829$ mm and $h \leq 765$ mm

$C_l = (L_1 + 1829)/L_3$ when $L_2 > 1829$ mm and $h > 765$ mm

where: $L_1 = 1016 + 1.75\ (h - 300)$
$L_2 = L_1 + 1.37s$
$L_3 = L_2 + 1829$
h = height of cover,, mm
s = span, mm

The live load pressures for H-20 and H-25 highway loads, including impact, are as given in Table 6.8. The live load pressures, neglecting impact, are as shown in Table 6.11.

Table 6.11 Highway live loads, neglecting impact[1]

Depth of Cover,	Load, KPa		
m	CL-625[2]	H-20[3]	H-25[3]
0.30	45	77	96
0.50	35	56	75
0.75	27	34	46
1.00	21	25	31
1.25	17	17	22
1.50	15	13	16
1.75	13	10	12
2.00	11	8	10
2.25	10	6	8
2.50	9	5	6
2.75	8	-	5
3.00	7	-	-
3.50	6	-	-
4.00	5	-	-

Notes: 1. Neglect live load when less than 5 kPa; use dead load only.
2. Load distribution through soil according to CAN/CSA-S6-06 (unfactored $\sigma_L m_f$, excluding dynamic load allowance).
3. Load distribution through soil according to ASTM traditional method (excluding impact).

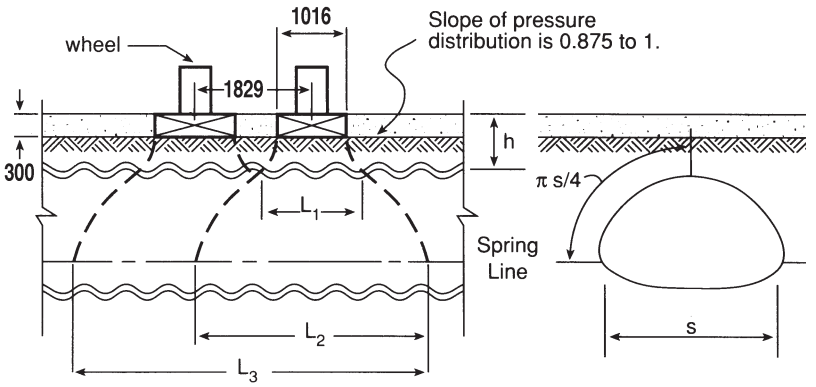

Figure 6.8 Longitudinal distribution of H-20 and H-25 live load corner bearing pressure in pipe-arches.

CL-625 Live Load

The live load pressure for the CL-625 live load are based on a different load distribution model than that used for the H-20 and H-25 live loads. The wheel loads are distributed at 0.5 to 1 (horizontal to vertical) in a longitudinal direction (along the length of the structure) and at a 1 to 1 in a transverse direction (in the direction of the span of the structure). The total load is then determined by distributing the wheel loads over the rectangular area which encloses the individual rectangular areas of the distributed wheel loads.

Figure 6.9 shows how the load is distributed from wheel loads over a pipe-arch. the pressure, at any height-of-cover, h, is spread over a distribution length L_1, at the

top of structure. The stress in the pipe wall, from this pressure, also spreads longitudinally. The length of the corner which transmits the wheel load is L_2. The reaction length includes an increase of 1.0 times the arc length from the top of the structure to the corner. The actual distribution of the load through the arc length would be a combination of the longitudinal and transverse distribution slopes, but using a distribution slope of 0.5 to 1 for this calculation provides a conservative result. this arc length can be approximated as one quarter of the circumference of a round pipe having a diameter which is the same as the span of the pipe-arch (add 1.0 x π x span / 4 = 0.785 x span).

The value of C_l is :

$C_l = L_1/L_2$

where: L_1 = 2400 + h
L_2 = L_1 + 0.785s
h = height of cover,, mm
s = span, mm

The above discussion and Figure 6.8 are based on a single vehicle load. for covers larger than 1350 mm, a two vehicle loading condition governs and the formula for L_1 should be changed to:

L_1 = 5400 + h

The live load pressures for the CL-625 highway load including dynamic load allowance, are as given in table 6.8. The live load pressures, neglecting dynamic load allowance are as shown in Table 6.11.

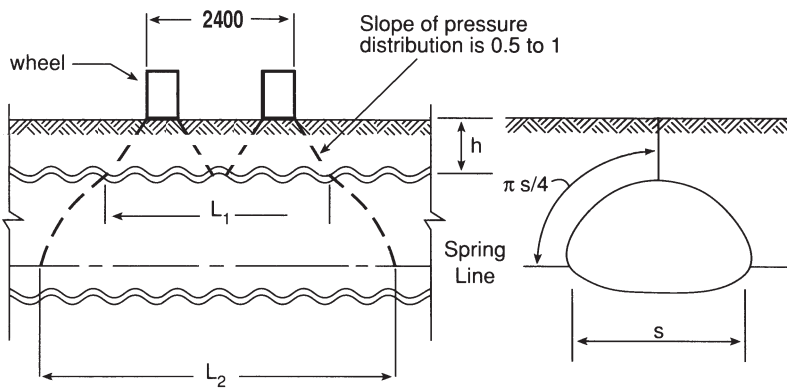

Figure 6.9 Longitudinal distribution of CL-625 live load corner bearing pressure in pipe-arches.

E-80 Railway Live Load

The live load pressures for railway live loads have traditionally been based on load application through a 610 by 2438 mm bearing area. The load is distributed at 0.875

to 1 (horizontal to vertical) through the earth fill. In other words, the pressure area at a particular depth has an additional length or width, in addition to the length or width of the loaded area at the surface, of 1.75 times the height of cover.

Figure 6.10 shows how the load is distributed from tie loads over a pipe-arch. The pressure, at any height-of-cover, h, below the 2438 mm wide tie, is spread over a distribution length L_1 at the top of the structure. The stress in the pipe wall, from this pressure, also spreads longitudinally. The length of the corner which transmits the live load is L_2. This reaction length includes an increase of 1.75 times the arc length from the top of the structure to the corner, using the same approximation for the arc length as described above for the H-20 and H-25 live loads.

The value of C_l is :

$C_l = L_1/L_2$

where: $L_1 = 2438 + 1.75h$
$L_2 = L_1 + 1.37s$
h = height of cover,, mm
s = span, mm

The above discussion is based on a single track arrangement, and it may be appropriate to consider overlap of pressure areas for some multiple track arrangements.

The live load pressures for railway live loads, including impact, are as given in Table 6.8. Those live load pressures should be divided by 1.5 to remove the allowance for impact.

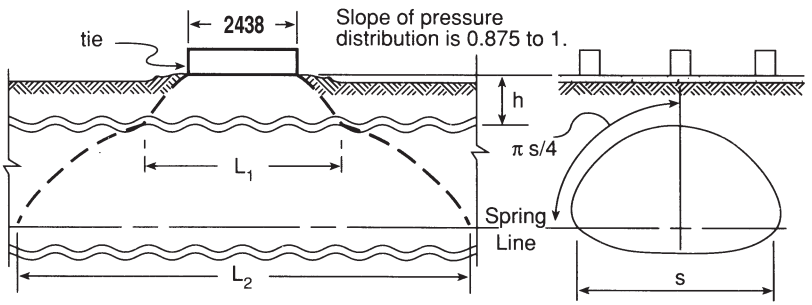

Figure 6.10 Longitudinal distribution of live load corner bearing pressure in pipe-arches under railway loading.

(b) Arches

The design of structural plate arches is based on a minimum allowable ratio of rise to span of 0.3 (equivalent to an arch through 124 degrees). The structural design method is the same as for round structural plate pipe.

The design of arches involves two additional important considerations.

The first consideration is the foundation rigidity. It is undesirable to make the steel arch relatively unyielding or fixed compared with the adjacent side fill. The use

of massive footings or piles to prevent any settlement of the arch is generally not recommended. When the structure is restrained at the base of the arch or the footings are founded on an unyielding foundation, the influence of column-type buckling must be considered.

The ultimate compressive strength of the arches that are less than semicircular (the rise to span ratio is less than 0.5) has been shown to be less than that of equivalent full round pipe. The standard practice is to use an allowable stress of $0.375f_b$ rather than $0.5f_b$.

Where poor materials are encountered, consideration must be given to removing some or all of this poor material and replacing it with acceptable material. The footing should be designed to provide uniform longitudinal settlement of acceptable magnitude. Allowing the arch to settle will protect it from potential drag-down

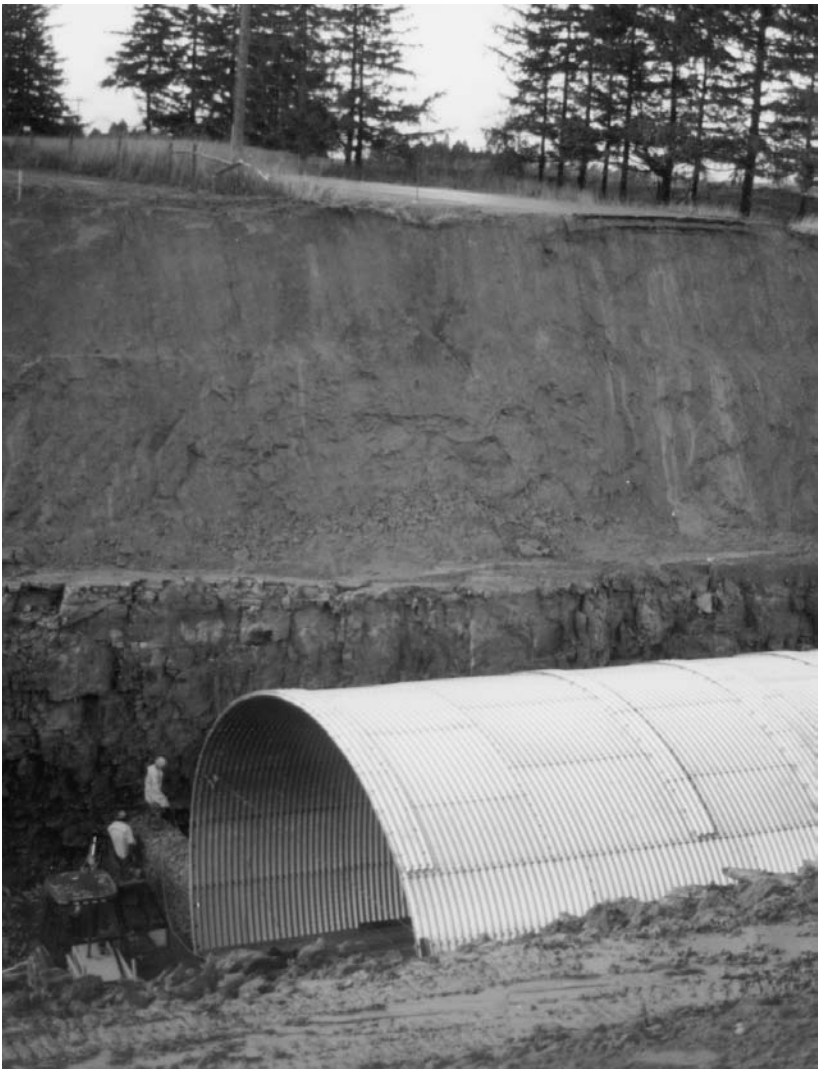

High-profile arch will be under high cover.

forces caused by the consolidation of the adjacent sidefill. An opportunity exists on all arch designs to permit the footing to settle and relieve the load on the arch. Positive soil arching can be assured by such practice, and lower safety factors can be used as a result.

The second consideration is the bearing capacity of soils under footings, the bottom of footing elevation (amount of bury), and the direction of the footing reaction. The value of the reaction is the thrust in the arch. Footing reactions for the arch are considered to act tangential to the plate at its point of connection to the footing. Footings should be set at a depth below maximum predicted scour lines. Alternatively, invert slabs or other appropriate measures can be provided to prevent scour.

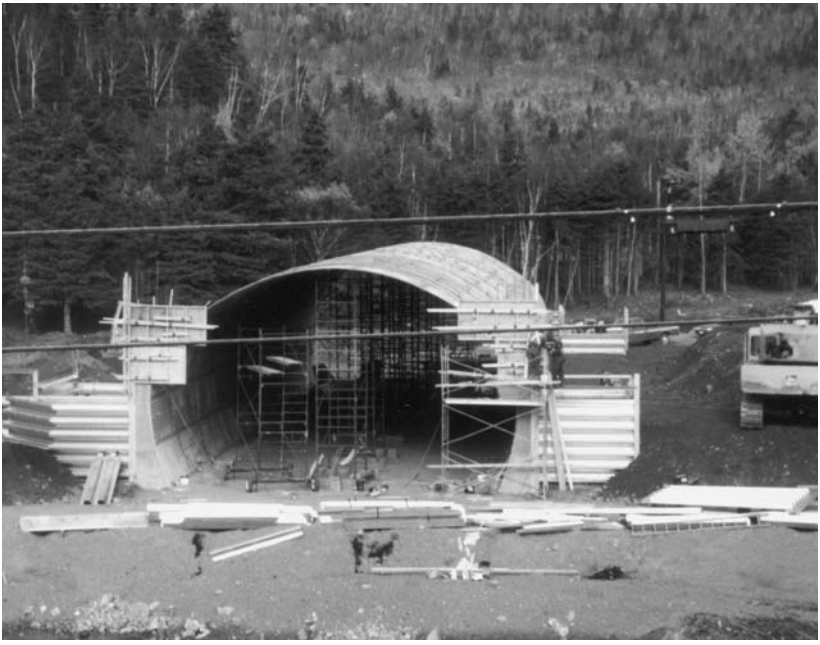

Forming for concrete collar and assembly of bin-type retaining wall

DESIGN OF BURIED STRUCTURES WITH SPANS GREATER THAN 3 m

In this publication, the AISI, AASHTO and CHBDC methods are all recognized for the design of soil-metal structures with a diameter or span greater than 3 m. The AISI and AASHTO methods have been used for many years and can continue to be used unless the CHBDC is specifically required.

AISI Method

The AISI design method, described above for structures with spans up to 3 m, is applicable to structures having spans larger than 3 m as well. The standard method described above has been used for structures up to 7.7 m in diameter. Structures with spans exceeding 3 m can be designed using the AISI method as long as the maximum allowable flexibility factor is not exceeded.

AASHTO Method

The structural design of "long span" structures follows the traditional ring compression methods with the exception that the buckling and flexibility factor requirements do not apply. Long span structures are structural plate pipes, pipe-arches and arches that can not be designed by the same method as shorter span structures. They also include all special shapes of any size that involve a relatively large radius of curvature in the crown or side plates, such as; vertical ellipses, horizontal ellipses, underpasses, low profile arches, high profile arches and inverted pears. These structures include special features and must meet a table of minimum requirements (Table 6.12). For ring compression calculations, the span in the formula for thrust is replaced by twice the top arc radius.

Table 6.12 AASHTO minimum requirements for long-span structures with acceptable special features

I. TOP ARC MINIMUM THICKNESS, mm

	Top Radius, m				
	≤ 4.57	4.57-5.18	5.18-6.10	6.10-7.01	7.01-7.62
152 x 51 mm Corrugated Steel Plates	2.77 mm	3.51 mm	4.27 mm	5.54 mm	6.32 mm

II. MINIMUM COVER, mm

	Top Radius, m				
Steel Thickness[a] in mm	≤ 4.57	4.57-5.18	5.18-6.10	6.10-7.01	7.01-7.62
2.77	760				
3.51	760	915			
4.27	760	915	915		
4.78	760	915	915		
5.54	610	760	760	915	
6.32	610	610	760	915	1220
7.11	610	610	760	915	1220

III. GEOMETRIC LIMITS

A. Maximum Plate Radius – 7.62 m
B. Maximum Central Angle of Top Arc = 80°
C. Minimum Ratio, Top Arc Radius to Side Arc Radius = 2
D. Maximum Ratio, Top Arc Radius to Side Arc Radius = 5*

*Note: Sharp radii generate high soil bearing pressures.
Avoid high ratios when significant heights of fill are involved.

IV. SPECIAL DESIGNS

Structures not described herein shall be regarded as special designs.

[a]When reinforcing ribs are used the moment of inertia of the composite section shall be equal to or greater than the moment of inertia of the minimum plate thickness shown.

CHBDC Method

The Canadian Highway Bridge Design Code (CHBDC) first introduced in 2001 contains a separate section for the design of buried structures, which includes soil-metal structures and metal box structures. The CHBDC method is based upon the limit states design philosophy and supersedes the Ontario Highway Bridge Design Code (OHBDC) and the CAN/S6-88 Design of Highway Bridges Standard. The CHBDC is available from CSA International as "**CAN/CSA-S6-06 Canadian Highway Bridge Design Code**".

The CHBDC method is similar to the AISI method with the following differences. Limit states design, as used in the CHBDC, is based on ultimate strength principles rather than the traditional working stress or service load design method.

The CHBDC distribution of live load through the fill is accomplished by the use of a thrust calculation, which is a function of the relative axial and flexural rigidity

of the structure wall with respect to soil stiffness. The CHBDC uses a strength calculation for combined bending and axial load during construction, based on work by Duncan and Byrne, instead of the AISI flexibility factor check. Additional procedures have been developed for seismic design and fatigue resistance. The CHBDC also includes a revised series of clauses covering the design of metal box structures based on the AASHTO Standard Specifications for Highway Bridges.

Limit States Design

For Limit States Design of soil-metal and metal box structures, the specific limit states that must be investigated under the general categories of Ultimate Limit State (ULS), Serviceability Limit State (SLS), and Fatigue Limit State (FLS) are outlined in Table 6.13

Table 6.13 Specific limit states

Limit State Categories	Structure	Specific Limit State
ULS	Soil-Metal	Compression Failure
		Plastic Hinge During Construction
		Connection Failure
	Metal Box	Plastic Hinge in Top Arc
		Connection Failure
SLS	Soil-Metal	Deformation During Construction
	Metal-Box	Deformation During Construction
FLS	Soil-Metal	Not Applicable
	Metal Box	Stress Range in Conduit Wall

Load Factors

The load factors used to compute factored loads are:

$\alpha_{DL} = 1.25$ Dead Load

$\alpha_{LL} = 1.70$ Live Load

The CHBDC live load factor of 1.70 replaces the value of 1.40 used in the 1991 Edition of the Ontario Highway Bridge Design Code. This increase was done in combination with a decrease in axle load for the design vehicle (CL-W).

The dynamic load allowance (DLA) is dependent on the depth of cover, H. For soil metal structures, it is specified to be 0.4 for zero depth of cover decreasing linearly to 0.1 for a depth of cover of 1.5 m. For depths of cover larger than 1.5 m, the DLA is specified to be 0.1. As a formula, this is expressed as:

$$DLA = 0.4 - 0.2H \geq 0.1$$

For metal box structures, the above formula applies for spans less than 3.6 m. For spans larger than 3.6 m, the value of 0.4 is replaced by 0.3 and the formula becomes:

$$DLA = 0.3 - 0.15H \geq 0.1$$

Material Resistance Factors

The material resistance factors, ϕ, provided in Table 6.14, are used to compute a factored resistance for the walls of soil-metal and metal-box structures.

Minimum Clear Spacing Between Conduits

For multiple structure installations with shallow corrugations, the smallest clear spacing between adjacent structures should be not less than 1000 mm, nor less than

Table 6.14 Material resistance factors

Type of Structure	Component of Resistance	Material Resistance Factor
Soil-metal with shallow corrugations	Compressive strength	$\phi_t = 0.80$
	Plastic hinge during construction	$\phi_{hc} = 0.90$
	Connections	$\phi_j = 0.70$
Soil-metal with deep corrugations	Compressive strength	$\phi_t = 0.80$
	Plastic hinge	$\phi_h = 0.85$
	Plastic hinge during construction	$\phi_{hc} = 0.90$
	Connections	$\phi_j = 0.70$
Metal box	Compressive strength	$\phi_t = 0.90$
	Plastic hinge	$\phi_h = 0.90$
	Connections	$\phi_j = 0.70$

one tenth of the largest span. The minimum clear spacing between two or more structures should also be sufficient for practicality of construction, especially for the placement and compaction of soil. Where space is restricted, a controlled low strength material (CLSM), with a minimum 28 day compressive strength of 7-10 MPa, may be used in lieu of compacted soil. Cast-in-place concrete or grout may also be used. If CLSM or other cementitious material is used, the design must consider uplift of the structure while the material is still wet.

For soil-metal structures with deep corrugations, the minimum clear span spacing between adjacent conduits shall be 1000 mm.

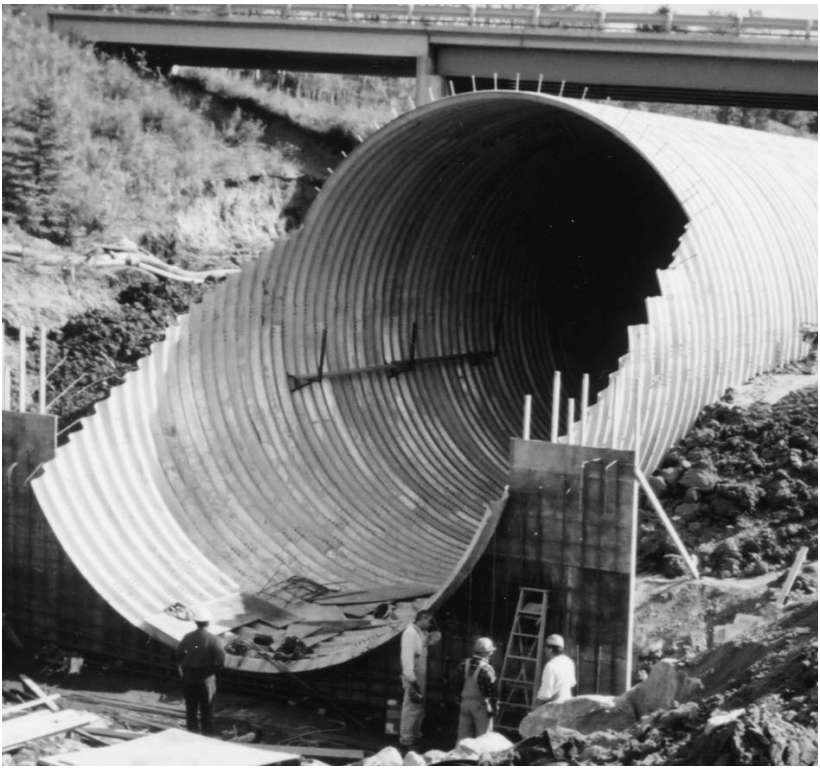

Installation of large diameter pipe with step-beveled end.

Spiral rib pipe inlet into large cast-in-place box.

Design Process: Soil-Metal Structures

The structural design process consists of the following:

1. Check minimum allowable cover.
2. Calculate dead load thrust.
3. Calculate live load thrust.
4. Calculate earthquake thrust (if required).
5. Calculate total factored thrust.
6. Calculate the compressive stress.
7. Calculate the wall strength in compression.
8. Check wall strength requirements during construction.
9. Check wall strength of completed structures with deep corrugations.
10. Check seam strength.
11. Check difference in plate thicknesses of adjacent plates.
12. Check plate radius of curvature.

1. **Minimum Cover**

For soil-metal structures designed in accordance with the CHBDC method, the minimum allowable depth of cover is the largest of

a) 0.6 m

b) $\frac{D_h}{6}\left(\frac{D_h}{D_v}\right)^{1/2}$ m

and

c) $0.4\left(\frac{D_h}{D_v}\right)^{2}$ m

where: D_h = horizontal dimension (effective span) of the structure as defined in Figure 6.11, m

D_v = vertical dimension (effective rise) of the structure as defined in Figure 6.11, m

For soil-metal structures with deep corrugations, the minimum depth of cover shall be the smaller of 1.5 m and the minimum depth of cover for structures with shallow corrugations but the same conduit size.

The minimum depth of cover requirement as illustrated in Figure 6.12, is meant to ensure that bending moments in the wall due to live loads are limited to a level which can be safely neglected in the design. It is also intended to prevent upheaval of a soil wedge above and to one side of a soil-metal structure due to the application of a large surface load. Shallower depths of cover may be used with the use of special features such as ribs on the structure crown, relieving slabs, earth reinforcing, or with the use of deep corrugated structural plate.

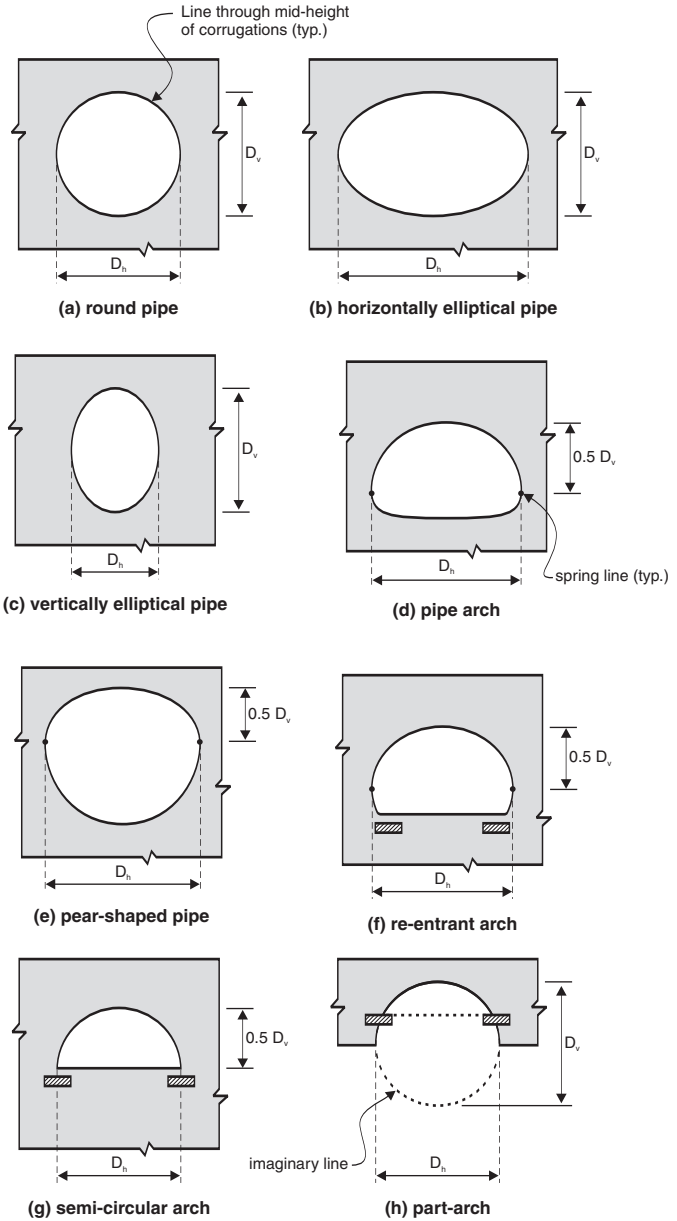

Figure 6.11 Definitions for D_h and D_v for various shapes.

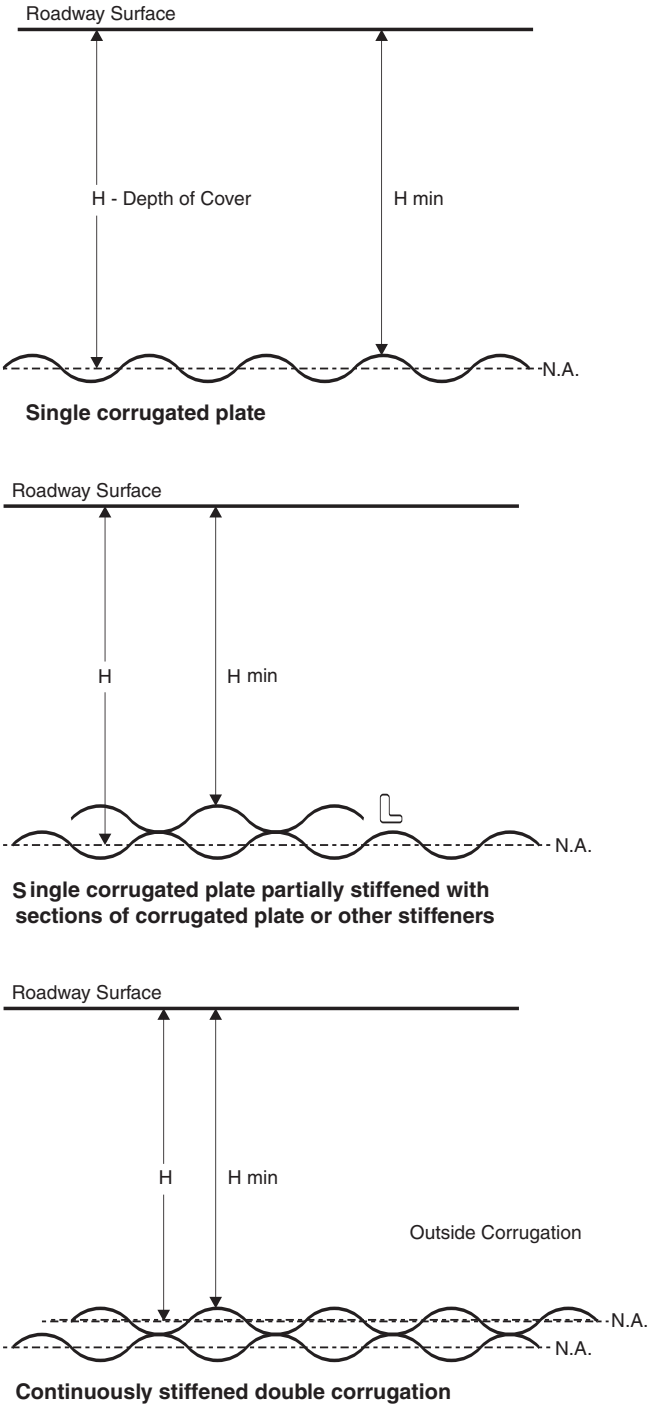

Figure 6.12 Depth of cover to soil-metal structures and metal-box structures.

2. **Dead Load Thrust**

The dead load thrust in the walls due to the overburden (dead) loads shall be calculated from:

$$T_D = 0.5\,(1.0 - 0.1\,C_S)\,A_f\,W$$

where: T_D = dead load thrust, kN/m
A_f = arching factor used to calculate the thrust due to dead load in the wall, as defined in Figure 6.13
C_S = axial stiffness parameter
W = dead weight of the column of material above the structure, as defined in Figure 6.14, kN/m

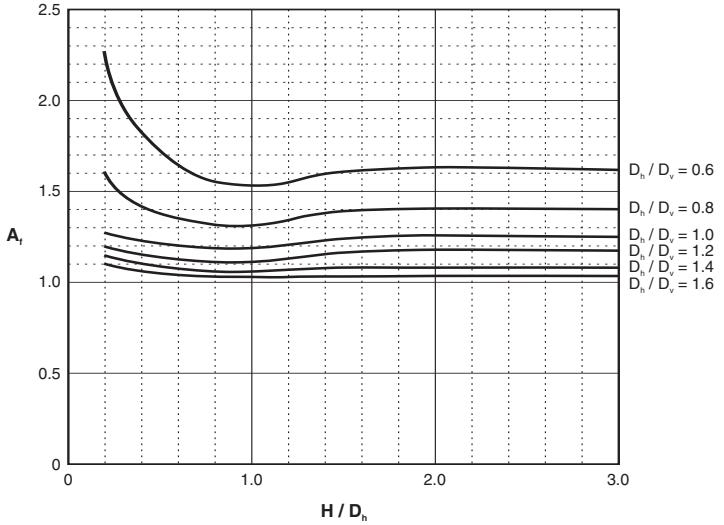

Figure 6.13 Arching factor, A_f.

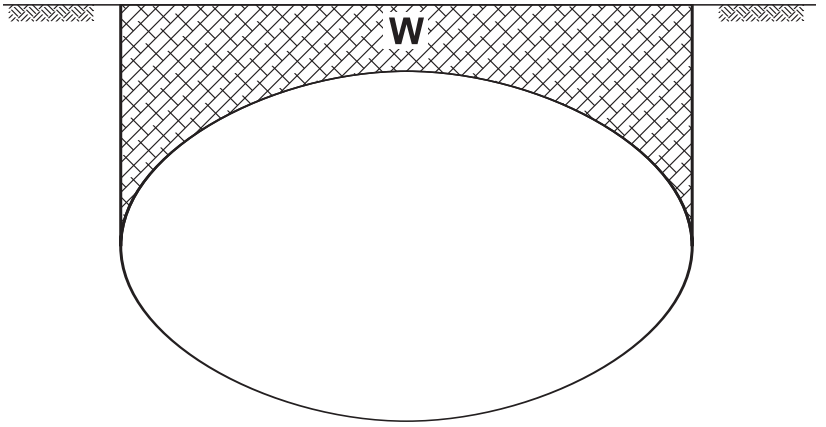

Figure 6.14 Area used in the calculation of W.

The axial stiffness parameter, C_S, is calculated from:

$$C_S = 1000\ E_S\ D_v / EA$$

where: E_S = secant modulus of soil stiffness, as defined in Table 6.6, MPa
D_v = vertical dimension (effective rise) of the structure, as defined in Figure 6.11, m
E = modulus of elasticity of the structure metal, MPa
A = cross-sectional area of the corrugation profile, mm^2/mm

3. **Live Load Thrust**
The live load thrust is assumed to be constant around the structure, and is given by the lesser of:

$$T_L = 0.5\ D_h\ \sigma_L\ m_f$$

or

$$T_L = 0.5\ l_t\ \sigma_L\ m_f$$

where: T_L = live load thrust due to unfactored live load, kN/m

D_h = horizontal dimension (effective span) of the structure, as defined in Figure 6.11, m

l_t = distance between the outermost axles including the tire footprints, placed in accordance with item (iii) plus 2H

H = height of cover, m

σ_L = uniformly-distributed pressure at the crown (top) of the structure resulting from the load distribution of the unfactored live load through the fill, kPa

m_f = modification factor for multi-lane loading; its value is specified to be 1.0 or 0.9 for one or two loaded lanes respectively (loading of more lanes does not govern)

The design live load vehicle is as shown in Figure 6.15. Note that there is a separate vehicle for Ontario (CL-625-ONT). The axles of interest (the second and third axles) are 140 kN each rather than 125 kN. The positioning of adjacent design vehicles, in order to obtain the maximum effect, is as shown in Figure 6.16.

The tire footprint for the design vehicle wheel loads measure 250 mm long by 600 mm wide.

The load case yielding the maximum value of $\sigma_L \bullet m_f$ is obtained as follows:

i) within the span length, position as many axles of the CL-W Truck or Trucks at the road surface above the conduit as would give the maximum total load;

ii) distribute the rectangular wheel loads through the fill down to the crown level at a slope of one vertically to one horizontally in the transverse

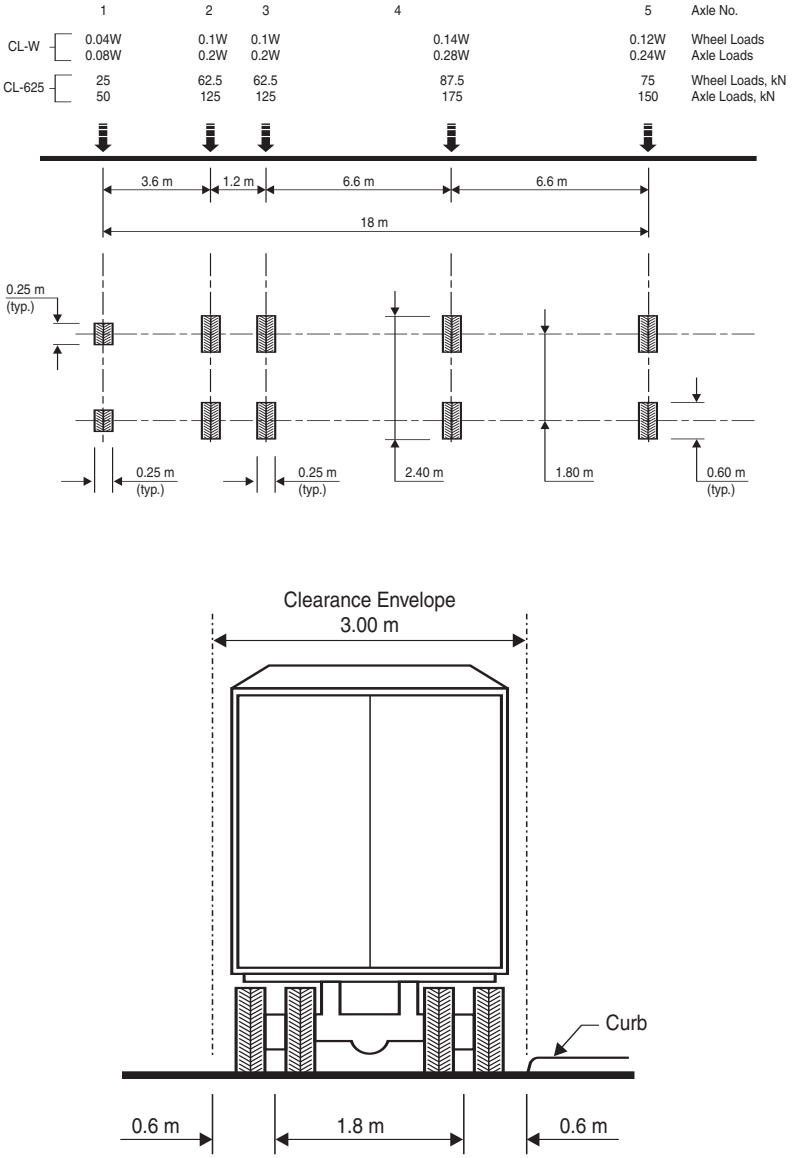

Figure 6.15 CHBDC CL-625 design truck.

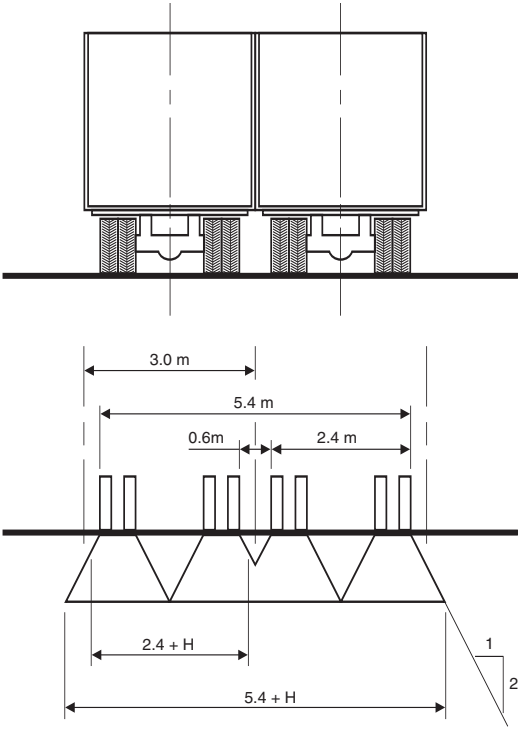

Figure 6.16 Positioning of adjacent design vehicles.

direction of the conduit and two vertically to one horizontally in the longitudinal direction;

iii) obtain the equivalent unifromly distributed presure σ_L by assuming that the total wheel loads considered in item (i) are uniformly distributed over the rectangular area that encloses the individual rectangular areas obtained in item (ii); and

iv) Multiply the resulting pressure by the multi-lane loading modification factor.

The term $\sigma_L \cdot m_f$ can be regarded as the effective static live load pressure at the crown level. Since the value of this pressure varies only with the height of cover, it can be plotted as shown in Figure 6.17 (includes DLA). Tables 6.8 and 6.11 give the values of the effective pressure for specific heights of cover including the dynamic load allowances and neglecting it, respectively. It can be seen from Figure 6.17 that, for depths of cover larger than 4.5 m, the effective live-load pressure at the crown level is less than 5 kPa. This is less than 5% of the unfactored live plus dead load, and is therefore often ignored.

4. **Earthquake Thrust**

Buried structures should be designed to resist inertial forces associated with a seismic event having a 10% chance of being exceeded in 50 years. The vertical component of the earthquake acceleration ratio, A_V, is 2/3 of the horizontal ground acceleration ratio, A_H. A_H is the zonal acceleration ratio as specified in Clause 4.4.3 of the Canadian Highway Bridge Design Code. Amplification of these accelerations

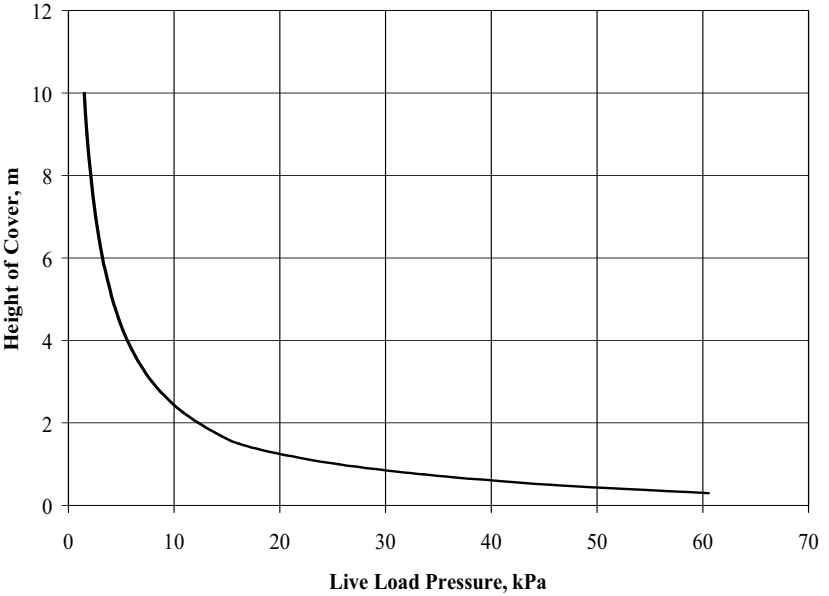

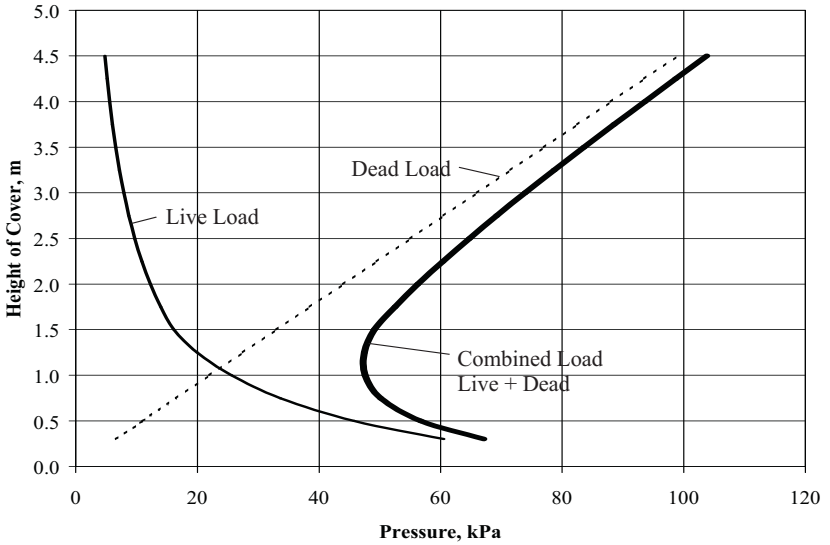

Figure 6.17 Variation of pressure with cover.

should be considered where a significant thickness of less competent soil overlies rock or firm ground.

The additional thrust due to earthquake loading, T_E, is obtained from:

$$T_E = T_D A_V$$

where: T_E = thrust in the wall of a soil-metal structure due to earthquake loading, kN/m

T_D = thrust in the structure wall due to unfactored dead load, kN/m

A_V = vertical acceleration ratio due to earthquake loading = 2/3 the horizontal acceleration ratio, A_H, dimensionless

The total factored thrust including the earthquake effects, T_f, is obtained from:

$$T_f = \alpha_D T_D + T_E = (\alpha_D + A_V)\, T_D$$

where: T_f = thrust in the structure wall due to factored loads, including earthquake loading, kN/m

α_D = dead load factor, dimensionless

5. **Total Thrust**
The thrust in the wall due to factored live loads and dead loads, T_f, is calculated according to the following equation:

$$T_f = \alpha_D T_D + \alpha_L T_L\,(1 + DLA)$$

where: T_f = thrust in the structure wall due to factored loads, kN/m

α_D = dead load factor, dimensionless

T_D = thrust in the wall due to unfactored dead load, kN/m

α_L = live load factor, dimensionless

T_L = thrust in the wall due to unfactored live load, kN/m

DLA = dynamic load allowance expressed as a fraction of live load

6. **Compressive Stress at the Ultimate Limit State (ULS)**
At the ULS, the compressive stress should not exceed the factored failure compressive stress.

$$\sigma \leq f_b$$

where: $\sigma = T_f / A$

σ = compressive stress at the ULS, MPa

f_b = factored wall failure stress in compression, MPa

T_f = factored thrust in the wall (maximum of the values in steps 4 and 5, kN/m

A = cross-sectional area of the corrugation profile, mm^2/mm

7. **Wall Strength in Compression**

a) for $R \leq R_e$

$$f_b = \phi_t F_m \left(F_y - \frac{(F_y K R)^2}{12\ E\ r^2 \rho} \right)$$

b) for $R > R_e$

$$f_b = 3\phi_t \rho F_m E \Big/ \left(\frac{KR}{r} \right)^2$$

where: i) E_m for the side and bottom portions of the structure wall should be the same as E_s, but for the top portion of the wall it is obtained from:

$$E_m = E_s \left[1 - \left(\frac{R_c}{R_c + 1000[H + H']} \right)^2 \right]$$

ii) λ for the top portion of the wall of all structures, except circular arches with rise-to-span ratios of less than 0.4, is obtained from:

$$\lambda = 1.22 \left[1.0 + 1.6 \left(\frac{EI}{E_m R_c^3} \right)^{1/4} \right]$$

For all other cases λ is 1.22.

iii) $$K = \lambda \left(\frac{EI}{E_m R^3} \right)^{1/4}$$

iv) $$\rho = \left(1000\ \frac{[H + H']}{R_c} \right)^{1/2} \leq 1.0$$

v) $$R_e = \frac{r}{K} \left(\frac{6E\rho}{F_y} \right)^{1/2}$$

vi) F_m = 1.0 for single structure installations, and for multiple structures,

$$F_m = \left(0.85 + \frac{0.3S}{D_h} \right) \leq 1.0$$

and where:

D_h = horizontal dimension (effective span) of the largest structure, in the case of multiple structures, as defined in Figure 6.11, m

E = modulus of elasticity of the structure metal, MPa

E_m = modified modulus of soil stiffness, MPa

E_s = secant modulus of soil stiffness, as defined in Table 6.6, MPa

F_m = reduction factor for modifying wall strength in multi-structure installations

F_y = cold-formed yield strength of the structure wall, MPa

H = depth of cover, m

H' = half the vertical distance between crown and springline, m

I = moment of inertia of the corrugation profile, mm^4/mm

K = factor representing the relative stiffness of the structure wall with respect to the adjacent soil

R = radius of curvature of the wall, measured at the neutral axis of the corrugation, at a transverse section, mm

R_c = R at the crown or top of the structure, mm

R_e = equivalent radius, mm

r = radius of gyration of the corrugation profile, mm

S = the least transverse clear spacing between adjacent structures, m

λ = factor used in calculating K

ρ = reduction factor for buckling stress in the structure wall

ϕ_t = resistance factor for compressive strength of soil-metal structures = 0.8

Assembly of structural plate pipe.

8. **Strength Requirements During Construction**

The combined effects of the bending moment and axial thrust, arising from the unfactored dead load and the unfactored live load resulting from specified construction equipment, should not exceed the factored plastic moment capacity of the section at all stages of construction. The combined bending moment and axial thrust are calculated as follows:

$$\left(\frac{P}{P_{Pf}}\right)^2 + \left|\frac{M}{M_{Pf}}\right| \leq 1.0$$

where:

$P = T_D + T_C$ (for H_c < minimum cover, P is assumed to be zero)

$P_{Pf} = \phi_{hc} A F_y$

$\left|\frac{M}{M_{Pf}}\right|$ = the absolute value of the ratio M/M_{Pf}

$M = M_I + M_B + M_C$

$M_{Pf} = \phi_{hc} M_P$

$M_I = k_{MI} R_B \gamma D_h^3$

$M_B = -k_{M2} R_B \gamma D_h^2 H_c$

$M_C = k_{M3} R_L D_h L_c$

$k_{M1} = 0.0046 - 0.0010 \text{ Log}_{10}(N_F)$ for $N_F \leq 5{,}000$
$k_{M1} = 0.0009$ for $N_F > 5{,}000$

$k_{M2} = 0.018 - 0.004 \text{ Log}_{10}(N_F)$ for $N_F \leq 5{,}000$
$k_{M2} = 0.0032$ for $N_F > 5{,}000$

$k_{M3} = 0.120 - 0.018 \text{ Log}_{10}(N_F)$ for $N_F \leq 100{,}000$
$k_{M3} = 0.030$ for $N_F > 100{,}000$

$R_B = 0.67 + 0.87[(D_v/2D_h) - 0.2]$ for $0.2 \leq D_v/2D_h \leq 0.35$
$R_B = 0.80 + 1.33[(D_v/2D_h) - 0.35]$ for $0.35 < D_v/2D_h \leq 0.5$
$R_B = D_v/D_h$ for $D_v/2D_h > 0.5$

$R_L = [0.265 - 0.053 \text{ Log}_{10}(N_F)]/(H_c/D_h)^{0.75} \leq 1.0$

$N_F = E_s(1000D_h)^3/EI$

$L_c = A_c/k_4$

and where:

A = cross-sectional area of the corrugation profile, mm^2/mm

A_c = axle load of construction equipment to be used above the structure during construction, kN

D_h, D_v = span and effective rise dimensions relating to the cross-sectional shape of the structure as defined in Figure 6.11

E = modulus of elasticity of the steel, MPa

E_s = secant modulus of soil stiffness, MPa (see Table 6.6)

F_y = cold-formed yield strength of the structural wall, MPa

H_c = depth of cover at intermediate stages of construction, m

I = moment of inertia about the neutral axis of the corrugated section, mm^4/mm

k_{M1}, k_{M2}, k_{M3} = factors used in calculating moments during construction

k_4 = factor used in calculating live load moments resulting from construction load, m (see Table 6.15)

L_c = line load equivalent to the construction load, kN/m

M = unfactored moment, kN.m/m

M_1 = moment resulting from fill to the crown level, kN.m/m

M_B = moment due to a height of fill, H_c, above the crown, kN.m/m

M_C = moment due to construction live loads, kN.m/m

M_P = unfactored plastic moment capacity, kN.m/m

M_{Pf} = factored plastic moment capacity, kN.m/m

N_F = flexibility number used in calculating moments during construction

P = unfactored thrust, kN/m

P_{Pf} = factored compressive strength, kN/m

R_B, R_L = parameters used in calculating moments during construction

T_C = additional thrust due to construction live loads, kN/m

T_D = thrust due to unfactored dead load, kN/m

γ = unit weight of soil, kN/m^3

ϕ_{hc} = resistance factor for formation of a plastic hinge = 0.90

Table 6.15 Values of the factor k_4 for calculating equivalent line loads

Depth of Cover, m	k_4, m		
	2 Wheels per Axle	4 Wheels per Axle	8 Wheels per Axle
0.3	1.3	1.5	2.6
0.6	1.6	2.0	2.8
0.9	2.1	2.7	3.2
1.5	3.7	3.8	4.1
2.1	4.4	4.4	4.5
3.0	4.9	4.9	4.9

9. **Wall Strength of Completed Structure With Deep Corrugations**

An additional check for soil-metal structures with deep corrugations requires the combined effects of the bending moment and axial thrust at the ultimate limit state shall not exceed the factored plastic moment capacity of the section in the completed (design) grade. The combined bending moment and axial thrust are calculated as follows:

$$\left[\frac{T_f}{P_{Pf}}\right]^2 + \left|\frac{M_f}{M_{Pf}}\right| \leq 1.0$$

where: Factored Comprehensive Strength of Section (P_{Pf}) = $\phi_h A F_y$
Factored Plastic Moment Capacity of Section (M_{Pf}) = $\phi_h M_p$
Maximum Thrust due to Factored Loads (T_f) as per step 2.
Maximum Moment due to Factored Loads -
$M_f = | \alpha_D M_1 + \alpha_D M_D | + \alpha_L M_L (1 + DLA)$

where: $M_1 = k_{M1} R_B \gamma D_h^3$
$M_D = - k_{M2} R_B \gamma D_h^2 H_e$ where H_e = smaller of H and $D_h/2$
$M_L = k_{M3} R_U D_h A_L / k_4$

$$R_U = \frac{[0.265-0.053\log_{10}(N_F)]}{\left(\frac{H}{D_h}\right)^{0.75}} \leq 1.0$$

Where k_{m1}, k_{m2}, k_{m3} and R_B are obtained from step 8., A_L is the weight of the second axle of the CL-W Truck and k_4 is obtained from Table 6.15. For H greater than 3.0 m, k_4 shall be assumed to be 4.9 m.

10. **Seam Strength**

The factored strength of longitudinal seams, $\phi_j S_s$, should not be less than T_f. The strength, S_s, may be evaluated experimentally or be from approved test data or published standards. In equation form:

$$\phi_j S_s \geq T_f$$

where: ϕ_j = resistance factor for connections = 0.70
S_s = axial strength of a longitudinal connection (see Tables 6.4b, 6.4c and 6.4d), kN/m
T_f = maximum thrust due to factored loads, kN/m

11. **Maximum Difference in Plate Thickness**
The difference in the thicknesses of lapping plates shall not exceed 1 mm if the thinner plate has a thickness of less than 3.1 mm, nor shall it exceed 1.5 mm if the thinner plate has a thickness between 3.1 and 3.5 mm. There is no limitation on the lapping plate thickness difference for connections where the thinner plate has a thickness exceeding 3.5 mm.

12. **Radius of Curvature**
The radius of curvature of the conduit wall, R, at any location, shall not be less than $0.2R_c$ (where R_c is the radius of the crown plate). The ratio of the radii of mating plates at a longitudinal connection should not be greater than 8.

Design Process: Metal Box Structures

The structural design process consists of the following:

1. Check dimensional requirements.
2. Check minimum cover.
3. Calculate dead load moments.
4. Calculate live load moments.
5. Calculate factored crown and haunch moments.
6. Calculate earthquake moments (if required).
7. Calculate flexural capacity at the ultimate limit state.
8. Check fatigue resistance.
9. Check seam strength.
10. Calculate the footing reaction.

1. **Dimensional Requirements**
The following provisions, accounting for soil-structure interaction, apply to the design of metal box structures (with element terminology as shown in Figure 6.18), having the dimensional limitations shown in Table 6.16 and a depth of cover up to 1.5 m. For metal box structures beyond these limits, the structure can be analysed using either the Non Linear Soil Structure Interaction Program (NLSSIP) or an acceptable alternate method.

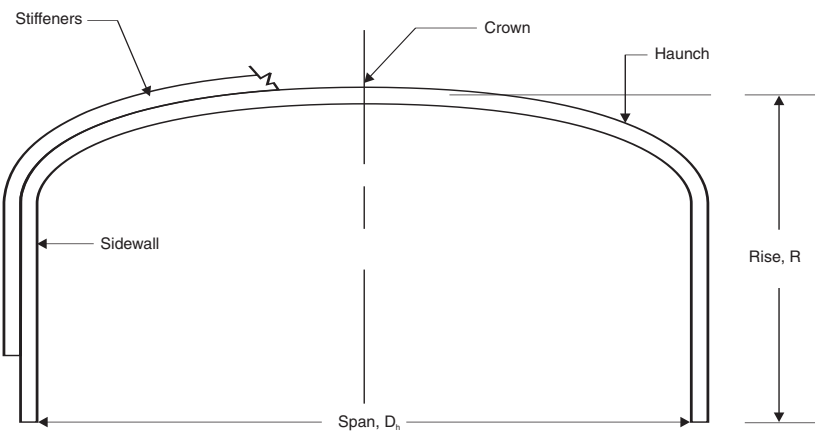

Figure 6.18 Metal-box culvert - terminology.

Table 6.16 Metal box structure dimensional limitations

Element	Minimum	Maximum
Rise (R)	0.8 m	3.2 m
Span (D_h)	2.7 m	8.0 m

2. **Minimum Cover**

For metal box structures designed in accordance with the CHBDC method, the minimum height of cover, H_{min}, illustrated in Figure 6.12 is 300 mm. Metal box structures differ greatly from soil-metal structures. They must be designed to resist live load moments.

3. **Dead Load Bending Moments**

The intensities of bending moments in the crown and the haunch due to dead loads, M_{cD} and M_{hD}, are fractions of M_D. They are given by:

$$M_D = k_1\gamma D_h^3 + k_2\gamma\left[H - \left(0.3 + \frac{d_c}{2000}\right)\right] D_h^2$$

$$M_{cD} = \kappa M_D$$

$$M_{hD} = (1-\kappa)\, M_D$$

where:

$$k_1 = 0.0053 - 0.00024\,(3.28D_h - 12)$$

$$k_2 = 0.053$$

$$\kappa = 0.70 - 0.0328\, D_h$$

and where:

M_D = sum of the intensities of bending moments in the crown and haunch due to dead load, kN.m/m

k_1, k_2 = factors used in calculating dead load moment

γ = unit weight of soil, kN/m^3

D_h = span dimension of the structure cross-section as defined in Figure 6.18, m

H = depth of cover, m

M_{cD} = crown bending moment due to dead load, kN.m/m

κ = crown moment coefficient used to calculate the crown and haunch bending moments

M_{hD} = haunch bending moment due to dead load, kN.m/m

d_c = corrugation depth, mm

4. **Live Load Bending Moments**

The intensities of bending moments in the crown and the haunch due to live loads, M_{cL} and M_{hL}, are fractions of M_L. They are given by:

$$M_L = C_1 k_3 L_L D_h$$

$$M_{cL} = \kappa M_L$$

$$M_{hL} = (1-\kappa)\, k_R M_L$$

where:

$$k_3 = 0.08 \Big/ \left(\frac{H}{D_h}\right)^{0.2} \quad \text{for } D_h \leq 6.0 \text{ m}$$

$$k_3 = [0.08 - 0.002(3.28D_h - 20)] \Big/ \left(\frac{H}{D_h}\right)^{0.2} \quad \text{for } 6 \text{ m} < D_h < 8 \text{ m}$$

$$L_L = A_L / k_4$$

$$k_R = 0.425H + 0.48 \leq 1.0$$

$$C_1 = 1.0 \text{ for single axles, } 0.5 + \frac{D_h}{15.24} \leq 1.0 \text{ for multiple axles}$$

and where:

A_L = the weight of a single axle of the CHBDC truck for $D_h < 3.6$m or the combined weight of the two closely-spaced axles of the CHBDC truck for $D_h \geq 3.6$ m, kN

D_h = span dimension of the structure cross-section as defined in Figure 6.18, m

H = depth of cover, m

k_R = haunch moment reduction factor for metal box structure

k_3, k_4 = factors used in calculating live load moments (for k_4, see Table 6.14)

L_L = line load equivalent to the live load, kN/m

M_L = sum of the crown and haunch bending moments due to live load, kN.m/m

M_{cL} = crown bending moment due to live load, kN.m/m

M_{hL} = haunch bending moment due to live load, kN.m/m

κ = crown moment coefficient used to calculate the crown and haunch bending moments (see step 3. Dead Load Bending Moments)

5. Factored Crown and Haunch Bending Moments

The factored crown and haunch bending moments, M_{cf} and M_{hf}, induced by factored dead and live loads, shall be calculated according to the following equations:

$$M_{cf} = \alpha_D M_{cD} + \alpha_L M_{cL} (1 + DLA)$$
$$M_{hf} = \alpha_D M_{hD} + \alpha_L M_{hL} (1 + DLA)$$

where: M_{cf} = total factored crown bending moment, kN.m/m

M_{cD} = crown bending moment due to dead load, kN.m/m

M_{cL} = crown bending moment due to live load, kN.m/m

M_{hf} = total factored haunch bending moment, kN.m/m

M_{hD} = haunch bending moment due to dead load, kN.m/m

M_{hL} = haunch bending moment due to live load, kN.m/m

DLA= dynamic load allowance expressed as a fraction of the live load (see "Load Factors")

α_D = dead load factor

α_L = live load factor

6. **Earthquake Bending Moments**

For metal box structures, the additional moment due to the effect of earthquake, M_E, is:

$$M_E = M_D \bullet A_V$$

where: $$A_v = \frac{2}{3} A_H$$

M_E = additional moment due to earthquake loading, kN.m/m

M_D = sum of the intensities of bending moments at the crown and haunch due to dead load, kN.m/m

A_V = vertical acceleration ratio due to earthquake loading, dimensionless

A_H = horizontal acceleration due to earthquake loading from the table provided in the CHBDC, dimensionless

The total factored moments, M_{cf} and M_{hf}, including the earthquake effects, are obtained as follows:

$$M_{cf} = \kappa (\alpha_D M_D + M_E)$$

$$M_{hf} = (l\text{-}\kappa) (\alpha_D M_D + M_E)$$

where: M_{cf} = total factored crown bending moment, kN.m/m

κ = crown moment coefficient used to calculate the crown and haunch bending moments

α_D = dead load factor

M_{hf} = total factored haunch bending moment, kN.m/m

7. **Flexural Capacity at Ultimate Limit State**
At the ULS, neither the factored crown moment, $M_{cf,}$ nor the factored haunch moment, M_{hf}, can exceed the factored plastic moment capacity M_{Pf}.

$$M_{cf} \leq M_{pf}$$

$$M_{hf} \leq M_{pf}$$

The values of M_{cf} and M_{hf} are the maximum values from steps 5 and 6.

The factored plastic moment capacity is calculated as:

$$M_{Pf} = \phi_h M_P$$

where: M_{Pf} = factored plastic moment capacity, kN.m/m

ϕ_h = resistance factor for plastic hinge = 0.9

M_P = unfactored plastic moment capacity of the section (see table 6.3), kN.m/m

Note: where plates are cross-corrugated to facilitate curving in the haunch areas, the haunch moment resistance shall be reduced accordingly.

8. **Fatigue Resistance**
Bolted seams should not be located in the vicinity of the crown nor in areas of maximum moments at the haunches. The computed stress range due to live load only should not exceed the stress range F_{sr}. The stress range must be determined by considering the stresses resulting from the live load moment extremes. The value for F_{sr}, for both corrugated plates and connections, is determined from section 10.17 of CAN/CSA-S6. The plate is considered as a category A stress range and the connection is considered as a category E stress range.

where F_{sr} = fatigue stress range for fatigue resistance

9. **Seam Strength**
For metal box structure walls designed only for bending moments, the factored moment resistance of longitudinal seams, $\phi_j S_M$, shall not be less than M_{cf} or M_{hf} (at the seam locations). For side walls designed for both axial thrust and bending moments, the factored axial strength of longitudinal seams, $\phi_j S_s$, shall not be less

than T_f. The strengths, S_M and S_s, may be evaluated experimentally or obtained from published standards. In equation form:

$$\phi_j S_M \geq M_{cf}, M_{hf}$$

$$\phi_j S_s \geq T_f$$

where:

S_M = flexural strength of a longitudinal connection (see Table 6.4c), kN.m/m

M_{cf}, M_{hf} = see Step 5, factored crown and haunch bending moments

S_s = axial strength of a longitudinal connection (see Table 6.4c), kN/m

T_f = maximum thrust due to factored loads, kN/m

ϕ_j = resistance factor for connections = 0.70

Connections shall be designed at the ultimate limit state for the larger of:

a) The calculated moment due to factored loads at the connection, and
b) 75% of the factored resistance of the member, $\phi_h M_p$.

10. **Footing Reactions**

The footing reaction for a box culvert may be determined using the following equation:

$$V = \gamma (HD_h/2 + D_h^2/40) + A_L/[2.4 + 2(H + R)]$$

where:

V = reaction acting in the direction of the box culvert straight side, kN/m

γ = unit weight of soil, kN/m^3

H = depth of cover, m

D_h = maximum span, m

A_L = axle load, kN

R = rise of box culvert, m

The vertical and horizontal footing reaction components are given by the equations:

$$V_V = V \cos \theta$$

$$V_H = V \sin \theta$$

where:

V_V = vertical footing reaction, kN/m

θ = angle between the sidewall and a vertical plane

V_H = horizontal footing reaction, kN/m

HEIGHT OF COVER TABLES

The following tables are presented for the designer's convenience for use in routine applications. They present the structural load-carrying capacity of CSP products, in terms of recommended minimum and maximum depths-of-cover. It is recommended that SPCSP structures be individually designed.

1. The values are based on the design methods which are outlined in this chapter. Tables are provided for structures designed using the AISI design method.

2. Live load includes impact.

3. The tables are based on the following values for soil and steel parameters:

   Soil Group 1
   - Well graded gravel or sandy gravel
   - Design compaction = 85% Standard Proctor Density
   - Compaction = 90% Standard Proctor Density (recommended for installation)
   - Unit weight - 19 kN/m^3
   - Secant Modulus - 6 MPa
   - K = 0.86 (for H $\geq$ 0)

   Steel Yield Strength - 230 MPa

4. Minimum cover is from neutral axis of corrugation profile at top of pipe to the bottom of flexible pavement. A footprint of 914 mm x 1016 mm at the bottom of the flexible pavement is used. Minimum cover may need to be increased for construction overloads.

5. Foundation investigation is recommended practice, to ensure adequate foundation support, particularly on high fills.

6. The steel wall thicknesses are industry recommended allowable minimums for structural design strength only, and do not consider other design factors such as unusual site conditions or abnormal environmental conditions affecting service life.

7. These minimum wall thicknesses assume that bedding and backfill material meet accepted engineering standards, compaction density is at least 85% Standard Proctor and that recognized workmanlike construction installation procedures are practiced. (Refer to Chapter 7).

8. The CSP industry recommends that drainage design warrants engineering consideration of all relevant factors towards metal thickness selection. The larger the pipe size, the greater attention that should be paid to all aspects of design and construction.

9. Where large or important projects can justify individual structure design, or when the quality of regular installations is known to be above that used here, the design procedure illustrated in the examples, included in this chapter, should be used with the appropriate values of soil and steel parameters.

List of Tables

Table No.	Shapes: Rnd Pipe	Shapes: Pipe-Arch	Shapes: Arch	Loading: CL-625	Loading: E 80	Size of Corrugations, mm: 68 × 13	76 × 25	125 × 25	152 × 51	Spiral Rib
HC- 1	X			X	X	X				
HC- 2	X			X	X		X			
HC- 3	X			X	X			X		
HC- 4		X		X		X				
HC- 5		X		X			X	X		
HC- 6		X			X	X				
HC- 7	X			X	X				X	
HC- 8		X		X					X	
HC- 9			X	X					X	
HC-10			X		X				X	
HC-11	X			X						X
HC-12		X		X						X

Table HC-1

Corrugated Steel Pipe (CSP)
Corrugation Profile **68 x 13 mm**

Inside Diameter mm	Minimum Cover: CL-625 (mm)	Minimum Cover: E-80 (mm)	Maximum Cover, m — Specified Wall Thickness, mm: 1.3	1.6	2.0	2.8	3.5	4.2
300	300	300	54	67	88			
400	300	300	41	51	67			
500	300	300	33	41	53	78		
600	300	300	27	34	45	65		
700	300	300		29	38	56		
800	300	300		26	34	49		
900	300	300		23	30	43	55	
1000	300	300		21	27	39	50	61
1200	300	300			22	33	42	51
1400	300	500				26	34	41
1600	300	500				21	27	33
1800	300	500					22	27
2000	300	500						21

Notes: (1) Important - please refer to foreword on these tables.
(2) Pipe sizes above the heavy line have flexibility factors (FF) not exceeding 0.245 mm/N.

Table HC-2

Corrugated Steel Pipe (CSP)
Corrugation Profile **76 x 25 mm**

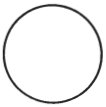

Helical or Annular CSP

Inside Diameter mm	Minimum Cover		Maximum Cover, m				
	CL-625	E-80	Specified Wall Thickness, mm				
	mm		1.6	2.0	2.8	3.5	4.2
1200	300	500	19	25	37		
1400	300	500	17	22	32	41	
1600	300	500	15	19	28	36	44
1800	300	500	13	17	25	32	39
2000	300	500	12	15	22	28	35
2200	300	700	10	14	20	26	32
2400	300	700		13	19	24	29
2700	500	700		11	16	20	25
3000	500	1000			13	17	21
3300	500	1000			11	14	18
3600	500	1000				12	15

Notes: (1) Important - please refer to foreword on these tables.
(2) Pipe sizes above the heavy line have flexibility factors (FF) not exceeding 0.188 mm/N.

Table HC-3

Corrugated Steel Pipe (CSP)
Corrugation Profile **125 x 25 mm**

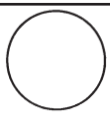

Helical CSP

Inside Diameter mm	Minimum Cover		Maximum Cover, m				
	CL-625	E-80	Specified Wall Thickness, mm				
	mm		1.6	2.0	2.8	3.5	4.2
1200	300	500	17	23	33		
1400	300	500	15	19	28	36	44
1600	300	500	13	17	25	32	39
1800	300	500	11	15	22	28	34
2000	300	500	10	13	20	25	31
2200	300	700	9	12	18	23	28
2400	300	700	8	11	16	21	26
2700	500	700		10	15	19	23
3000	500	1000			12	16	19
3300	500	1000			10	13	16
3600	500	1000				11	14

Notes: (1) Important - please refer to foreword on these tables.
(2) Pipe sizes above the heavy line have flexibility factors (FF) not exceeding 0.188 mm/N.

Table HC-4

CL-625 Highway Loading
Corrugation Profile: **68 x 13 mm**

Pipe-Arch

Span, mm	Rise, mm	Minimum Cover, mm	Minimum Specified Wall Thickness, mm	Maximum Depth of Cover, m to restrict Corner Pressure to the following:		
				200 kPa	300 kPa	400 kPa
560	420	300	1.6	4.8	7.4	9.9
680	500	300	1.6	5.0	7.6	10.1
800	580	300	1.6	4.9	7.4	9.9
910	660	300	1.6	4.9	7.5	10.0
1030	740	300	1.6	4.8	7.3	9.7
1150	820	300	1.6	4.7	7.2	9.6
1390	970	300	1.6	4.6	7.1	9.5
1630	1120	300	2.0	4.6	7.0	9.4
1880	1260	300	2.8	4.5	6.8	9.2
2130	1400	300	3.5	4.4	6.8	9.1

Notes: (1) Important - please refer to foreword on these tables.

Table HC-5

CL-625 Highway Loading
Corrugation Profiles
76 x 25 mm and 125 x 25 mm

Pipe-Arch

Span, mm	Rise, mm	Minimum Cover, mm	Minimum Specified Wall Thickness, mm		Maximum Depth of Cover, m to restrict Corner Pressure to the following:		
			76 x 25	125 x 25	200 kPa	300 kPa	400 kPa
1330	1030	300	2.0	2.0	5.2	7.9	10.5
1550	1200	300	2.0	2.0	5.2	7.9	10.5
1780	1360	300	2.0	2.0	5.2	7.9	10.6
2010	1530	300	2.0	2.0	5.1	7.8	10.4
2230	1700	300	2.0	2.0	5.4	8.1	10.9
2500	1830	350	2.0	2.0	5.3	8.0	10.7
2800	1950	350	2.0	2.0	5.2	7.9	10.6

Notes: (1) Important - please refer to foreword on these tables.

Table HC-6

E-80 Railway Loading
Corrugation Profiles **68 x 13 mm**

Pipe-Arch

Span, mm	Rise, mm	Minimum Specified Wall Thickness, mm			
		Depth-of-Cover Range*, m			
		0.6 to 0.9 m	0.9 to 1.5	1.5 to 2.4	2.4 to 4.6
560	420	2.8	2.0	2.0	2.0
680	500	2.8	2.8	2.0	2.0
800	580	3.5	2.8	2.8	2.8
910	660	—	3.5	2.8	2.8
1030	740	—	3.5	3.5	2.8
1150	820	—	—	3.5	3.5
1390	970	—	—	—	3.5

* Values interpolated from empirical results gathered over 25 years.

NOTES: (1) Please refer to Foreword.
(2) Live load includes impact, and dead load is based on a unit weight of backfill material of 19 k N/m³.

Table HC-7

Depth-of-Cover Limits for SPCSP Round Pipe
Highway H-20, or Railway E-80 Loadings
Corrugation Profile **152 x 51 mm**

Inside Diameter mm	Periphery (Hole Spaces) N	Minimum Cover		Maximum Cover, m				
		CL-625	E-80	Specified Wall Thickness, mm				
		mm		3.0	4.0	5.0	6.0	7.0
1500	20N	300	500	31	43	55	67	79
1660	22N	300	500	28	39	50	61	71
1810	24N	300	500	26	36	46	56	65
1970	26N	300	500	24	33	42	51	60
2120	28N	300	500	22	31	39	48	56
2280	30N	300	500	21	29	37	45	52
2430	32N	500	500	19	27	34	42	49
2590	34N	500	700	18	25	32	39	46
2740	36N	500	700	17	24	31	37	43
3050	40N	500	700	15	21	27	33	39
3360	44N	500	700	14.5	19	25	30	35
3670	48N	500	1000	13	18	23	28	32
3990	52N	700	1000	12	16.5	21	25	30
4300	56N	700	1000	11	15.5	19.5	24	28
4610	60N	700	1000	10.5	14.5	18.5	22	26
4920	64N	700	1000	9.5	13.5	17	21	24.5
5230	68N	700	1250	9	12	15.5	19	22.5
5540	72N	700	1250		11	14.5	17.5	20.5
5850	76N	1000	1250		10.5	13	16	19
6160	80N	1000	1250			12	15	17.5
6470	84N	1000	1500			11	13.5	16
6780	88N	1000	1500			10	12.5	14.5
7090	92N	1000	1500				11.5	13.5
7400	96N	1000	1500				10.5	12
7710	100N	1000	1500					11
8020	104N	1000	1500					10

Notes: (1) Important - please refer to foreword on these tables.
(2) Pipe sizes above the heavy line have flexibility factors (FF) not exceeding 0.114 mm/N.

Table HC-8

Depth-of-Cover Limits for SPCSP Pipe-Arch
CL-625 Highway Loadings
Corrugation Profile **152 x 51 mm**

Span, mm	Rise, mm	Minimum Cover, mm	Minimum Thickness, mm	Maximum Depth of Cover, m to restrict Corner Pressure to the following:			
				100 kPa	200 kPa	300 kPa	400 kPa
2050	1520	300	3.0	2.9	6.0	9.1	12.2
2240	1630	300	3.0	2.7	5.6	8.6	11.5
2440	1750	350	3.0	2.5	5.4	8.2	11.0
2590	1880	350	3.0	2.5	5.4	8.2	11.0
2690	2080	350	3.0	2.8	5.9	8.9	11.9
3100	1980	400	3.0	1.9	4.1	6.3	8.4
3400	2010	450	3.0	1.4	3.3	5.1	6.9
3730	2290	500	3.0	1.5	3.5	5.3	7.2
3890	2690	500	3.0	1.9	4.2	6.4	8.6
4370	2870	550	3.0	1.6	3.6	5.6	7.5
4720	3070	600	3.0	1.5	3.4	5.2	7.0
5050	3330	650	3.0	1.5	3.3	5.0	6.8
5490	3530	700	3.0	1.3	3.0	4.6	6.2
5890	3710	750	3.0	1.2	2.8	4.3	5.8
6250	3910	800	4.0	1.1	2.6	4.1	5.5

Notes: (1) Important - please refer to foreword on these tables.

Table HC-9

Depth-of-Cover Limits for SPCSP Arches
CL-625 Highway Loadings
Corrugation Profile **152 x 51 mm**

$.30 \leq \frac{\text{Rise}}{\text{Span}} \leq .50$

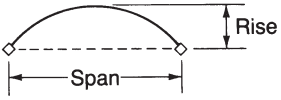

Inside Dimensions		Minimum Cover mm	Maximum Cover, m				
			Specified Wall Thickness, mm				
Span mm	Radius mm		3.0	4.0	5.0	6.0	7.0
1520	760	300	23	32	41	50	58
1830	930	300	19	27	34	41	48
	910	300	19	27	34	41	48
2130	1090	300	17	23	29	36	42
	1070	300	17	23	29	36	42
2440	1230	500	14	20	26	31	36
	1220	500	14	20	26	31	36
2740	1400	500	13	18	23	28	32
	1370	500	13	18	23	28	32
3050	1540	500	11	16	20	25	29
	1520	500	11	16	20	25	29
3350	1710	500	10.5	14	18	23	26
	1680	500	10.5	14	19	23	27
3660	1850	500	9.5	13	17	21	24
	1830	500	9.5	13	17	21	24
3960	2010	500	9	12	16	19	22
	1980	500	9	12	16	19	22
4270	2160	700	8.5	11	15	18	21
	2130	700	8.5	11	15	18	21
4570	2340	700	7.5	10	13	16	19
	2290	700	7.5	10	14	17	19
4880	2480	700		10	13	15	18
	2440	700		10	13	15	18
5180	2620	700		9	12	14	17
	2590	700		9	12	14	17
5490	2820	700		8	10	13	15
	2740	700		8.5	11	13	15
5790	2950	1000			10	12	14
	2900	1000			10	12	14
6100	3100	1000			9	11	13
	3050	1000			9	11	13

Notes: (1) Important - please refer to foreword on these tables.
(2) For structural plate arches R/S > .50, use round pip tables or 1.39 x these values.

Table HC-10

Depth-of-Cover Limits for SPCSP Arches
E-80 Railway Loadings
Corrugation Profile **152 x 51 mm**

$.30 \leq \frac{\text{Rise}}{\text{Span}} \leq .50$

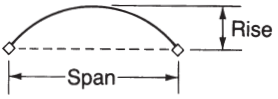

Inside Dimensions*		Minimum Cover, mm	Maximum Depth-of-Cover, m				
			Specified Wall Thickness, mm				
Span, mm	Radius, mm		3.0	4.0	5.0	6.0	7.0
1520	760	500	24	34	43	52	61
1830	930		20	27	35	42	49
	910		20	28	36	43	51
2130	1090		17	23	30	36	42
	1070		17	24	30	37	43
2440	1230		15	21	26	32	37
	1220	500	15	21	27	32	38
2740	1400	700	13	18	23	28	33
	1370		14	19	24	29	34
3050	1540		12	17	21	26	30
	1520		12	17	21	26	30
3350	1710		11	15	19	23	27
	1680	700	11	15	19	23	27
3660	1850	1000	10	14	18	21	25
	1830		10	14	18	22	25
3960	2010		9	13	16	20	23
	1980		9.5	13	16	20	23
4270	2160		8	12	15	18	21
	2130		8.5	12	15	18	22
4570	2340		7	11	14	17	20
	2290		7.5	11	14	17	20
4880	2480			10	13	16	19
	2440	1000		10	13	16	19
5180	2620	1250		9.5	12	15	17
	2590			9.5	12	15	17
5490	2820			8.0	11	13	15
	2740			8.5	11	14	16
5790	2950				10	12	14
	2900				10	13	15
6100	3100				9.5	11	13
	3050	1250			9.5	12	14

For structural plate arches R/S ≥ .50 use round pipe tables or 1.39 × these values.

Table HC-11

Depth-of-Cover Limits for round Spiral Rib Pipes
19 x 19 x 190 mm rib profile
CL-625 live load

Diameter, mm	Minimum Cover, mm	Maximum Cover, m Specified Thickness, mm		
		1.6	2.0	2.8
450	300	22.7	33.6	
525	300	19.4	28.8	50.6
600	300	17.0	25.2	44.3
750	300	13.6	20.2	35.4
900	300	11.3	16.8	29.5
1050	300	9.7	14.4	25.3
1200	300	8.5*	12.6	22.1
1350	350	7.5*	11.2	19.7
1500	400	6.8*	10.1*	17.7
1650	450		9.1*	16.1
1800	450		8.4*	14.7
2100	550			12.6*
2400	600			11.0*

*These installations require attention to backfill material and compaction methods used. Refer to the "Design of Buried Structures With Spans Up To 3 m - Handling Stiffness" discussion for more details on the various installation types.

Table HC-12

Depth-of-Cover Limits for Spiral Rib Pipe-arches
19 x 19 x 190 mm rib profile
CL-625 live load

Span, mm	Rise, mm	Equivalent Diameter, mm	Minimum Cover, mm	Maximum Height of Fill (m) to Limit Corner Bearing Pressures to a Maximum of 200 kPa		
				Metal Thickness (mm)		
				1.6	2.0	2.8
500	410	450	300	4.0	4.0	
580	490	525	300	5.2	5.2	5.2
680	540	600	300	5.2	5.2	5.2
830	660	750	300	5.2	5.2	5.2
1010	790	900	300	4.4	4.4	4.4
1160	920	1050	300	5.1	5.1	5.1
1340	1050	1200	300		4.4	4.4
1520	1200	1350	340		5.3*	5.3
1670	1300	1500	380		5.1*	5.1
1850	1400	1650	410		4.7*	4.7

*These installations require attention to backfill material and compaction methods used. Refer to the "Design of Buried Structures With Spans Up To 3 m - Handling Stiffness" discussion for more details on the various installation types.

DESIGN EXAMPLES

The following examples illustrate the application of design procedures using the CHBDC design method summarized in the preceding pages. They include:

1. 8955 x 6070 mm horizontal ellipse under 3.0 m of cover
2. 6260 x 3910 mm pipe-arch under 2.0 m of cover
3. 6165 x 1900 mm metal box under 0.90 m of cover
4. 3600 mm diameter pipe under 8.0 m of cover, located in Vancouver, B.C., (seismic consideration)
5. 6100 x 2530 mm arch under 1.1 m of cover
6. 11000 x 6385 mm arch under 2.5 m of cover
7. 13000 x 4512 mm arch under 3.0 m of cover

Example 1

Given: Horizontal Ellipse, 8955 mm span x 6070 mm rise
Height of Cover, H =3.0 m
CL 625 Live Load
Soil Group 1, 90%-95% Standard Proctor Density
Unit Weight of Soil $\gamma = 22 kN/m^3$
Secant Modulus Es = 12 MPa

Required: Determine wall thickness for a 152 x 51 corrugation

Geometric Data: D_h = 9.006 m, D_v = 6.121 m (neutral axis)
Crown radius (Rc) = 5763 mm (N.A.), $\theta_{top} = 80^0$
Side radius (R_2) = 2235 mm (N.A.)
Bottom radius (R_3) = 5763 mm (N.A.)

1. Minimum Cover (H_{min}) is the largest of:

a) 0.6 m

b) $\frac{D_h}{6}\left(\frac{D_h}{D_v}\right)^{0.5} = 1.82$ m <u>Governs</u>

c) $0.4\left(\frac{D_h}{D_v}\right)^2 = 0.87m$

H_{min} = 1.82 m, H_{min}<H (3.0 m)

2. Dead Load Thrust (T_D)

$T_D = 0.5\ (1.0 - 0.1\ C_S)\ A_f\ W$
A_f = 1.094 (Figure 6.13)

$$C_s = \frac{1000 E_S D_v}{EA}$$

Where: E = 200 000 MPa, E_s = 12 MPa
6.0mm Plate Area = 7.461 mm^2/mm
C_s = 0.0492

$$W = \gamma\left[(HD_h) + Area\ Between\ Springline\ \&\ Crown\right]$$

TopRise = 3.06m, N.A. Inside End Area of structure above springline = 21.26 m^2
W = 22[3.0(9.006)+ 6.3] = 733.1 kN/m
T_D = 0.5[1.0-0.1(0.0492)]1.094(733.1)
T_D = 399.1 kN/m

3. Live Load Thrust (T_L)

$T_L = 0.5$ *(lesser of D_h and l_t)* $\sigma_L m_f$

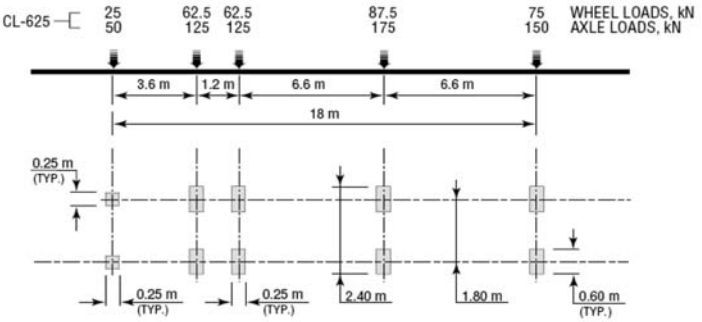

Position as many axles of the CL-625 truck within the span length, (D_h = 9.006 m), at the road surface as would give the maximum total load. In this example, placing axles 2, 3, and 4 above the structure produces the highest total load (P = 425 kN)

1 lane, (m_f =1.0)

$$\sigma_L = \frac{AxleLoad}{l_t w} \text{ where:}$$

l_t = a + 2(H) = 8.05 + 2(3) = 14.05 m

w = b + H = 1.8 + 0.6 + 3 = 5.4m

$$\sigma_L = \frac{425}{14.05(5.4)} = 5.6\ kPa$$

$$\sigma_L m_f = 5.6(1.0) = 5.6\ kPa$$

2 lanes, (m_f =0.9)

l_t (14.05 m) > D_h (9.006 m)

$w = 5.4 + H = 8.4m$

$$\sigma_L = \frac{2(425)}{14.05(8.4)} = 7.2\,kPa$$

$\sigma_L m_f$ = 7.2(0.9) = 6.48 *kPa* <u>Governs</u>

T_L = 0.5 (lesser of D_h and l_t) $\sigma_L m_f$

= 0.5 (9.008) 6.48

T_L = 29.19 kN/m

4. Earthquake Thrust – Not Applicable

5. Total Factored Thrust *(T_f)*

$T_f = \alpha_D T_D + \alpha_L T_L\ (1 + DLA)$

α_D = 1.25

α_L = 1.70

$DLA = 0.40(1-0.5D_e) \geq 0.10$

Where: D_e = H = 3.0 m

$DLA = 0.10$

T_f = 1.25(399.1) + 1.70(29.19)(1.1)

T_f = 543.4 kN/m

6. Compressive Stress at ULS *(σ)*

$\sigma = \dfrac{T_f}{Area}$ where Area = 7.461 mm²/mm for 6.0 mm plate thickness

σ **= 74.2 *MPa***

7.0 Wall Strength in Compression

Definition of upper zone

i) $\theta_0 = 1.6 + 0.2\log\left[\dfrac{EI}{E_m R^3}\right]$ radians where:

$$E_m = E_S\left[1 - \left[\frac{R_C}{R_C + 1000\left[H + H'\right]}\right]^2\right]$$

E_s = 12.0 MPa, R = R_c = 5763 mm, H = 3.0 m, H' = $\dfrac{D_v}{4}$ = 1.53 m

$I_{6.0mm} = 2278.3\dfrac{mm^4}{mm}$ then

E_m = 8.237 MPa, $\theta_0 = 51.1^0$

ii) $\lambda = 1.22\left[1.0 + 1.6\left[\dfrac{EI}{E_m R_c^3}\right]^{0.25}\right]$

$\lambda = 1.4745$

iii) $K = \lambda\left[\dfrac{EI}{E_m R^3}\right]^{0.25}$

$K = 0.1922$

iv) $\rho = \left[1000\dfrac{\left(H + H'\right)}{R_c}\right]^{0.5} \leq 1.0$

$\rho = 0.8866$

v) $R_e = \dfrac{r}{K}\left[\dfrac{6E\rho}{F_y}\right]^{0.5}$

for 6.0 mm plate thickness, r = 17.48 mm

R_e = 6185 mm

vi) F_m = 1.0 for single conduit

vii) $R < R_e$

$$f_b = \phi_t F_m\left[F_y - \frac{\left(F_y KR\right)^2}{12Er^2\rho}\right]$$

f_b = 104.1 MPa

As σ (74.2) < f_b(104.1), 6.0 mm plate thickness satisfies compressive stress criteria where R =5763 mm in the upper zone.

viii) Check Lower Zone Arcs for Wall Strength in Compression
$\lambda = 1.22,\ E_m = E_s = 12\,\text{MPa},\ \rho = 0.8866$
R_2 = 5763 mm (top/bottom) R_3 = 2235 mm (side)

	R_2 (Top/Bottom)	R_3 (side)
K	0.1448	0.2946
R_e	8210 mm	4035 mm
f_b	$R_2 < R_e$ $f_b = 138.7\ MPa$	$R_3 < R_e$ $f_b = 155.8\ MPa$

Where:

$$K = \lambda\left[\frac{EI}{E_m R^3}\right]^{.25}$$

$$R_e = \frac{r}{K}\left[\frac{6E\rho}{F_y}\right]^{0.5} mm$$

$$f_b = \phi_t F_m\left[F_y - \frac{(F_y KR)^2}{12Er^2\rho}\right] MPa$$

when $R \le R_e$

As $\sigma(74.2) < f_b$, 6.0 mm plate thickness satisfies compressive stress criteria for all radii within the lower zone.

8.0 Strength Requirements During Construction

$$\left[\frac{P}{P_{pf}}\right]^2 + \left|\frac{M}{M_{pf}}\right| \le 1$$

Where:

$P = T_D + T_C$ and for $H_c < H_{min}$ $P = 0$
$P_{pf} = \phi_{hc} A F_y$
$M = M_1 + M_B + M_C$
$M_{Pf} = \phi_{hc}\ M_p$

Where:
$M_1 = k_{M1} R_B\, \gamma\, D_h^3$
$M_B = -k_{M2} R_B\, \gamma\, D_h^2 H_c$
$M_C = k_{M3} R_L\, D_h\, L_C$

Where:
$k_{M1} = 0.0046 - 0.0010 \log_{10}(N_F)$ for $N_F \le 5000$
$= 0.0009$ for $N_F > 5000$
$k_{M2} = 0.018 - 0.004 \log_{10}(N_F)$ for $N_F \le 5000$
$= 0.0032$ for $N_F > 5000$
$k_{M3} = 0.120 - 0.018 \log_{10}(N_F)$ for $N_F \le 100\,000$
$= 0.030$ for $N_F > 100\,000$

$$R_B = 0.67 + 0.87\left[(D_v/2D_h) - 0.2\right] for\ 0.2 \le D_v/2D_h \le 0.35$$
$$= 0.80 + 1.33\left[(D_v/2D_h) - 0.35\right] for\ 0.35 < D_v/2D_h \le 0.50$$
$$= D_v/D_h\ for\ D_v/2D_h > 0.5$$

$$R_L = \frac{\left[0.265 - 0.053\log_{10}(N_F)\right]}{\left(\frac{H_c}{D_h}\right)^{0.75}} \le 1.0$$

$$L_c = \frac{A_C}{k_4}$$

$$\left|\frac{M}{M_{Pf}}\right| = absolute\ value\ of\ the\ ratio\ \frac{M}{M_{Pf}}$$

$$N_F = E_s(1000D_h)^3 / EI$$

Select $H_c < H_{min}$, $H_c = 0.6$m, therefore P=0 as $H_c < H_{min}$

a) Assume Construction Axle (A_c) = 250 kN, 4 wheels per axle
$M = M_1 + M_B + M_C$

Calculate Flexibility Number N_F
$N_F = E_s(1000D_h)^3 / EI$
E_s =12, D_h = 9.006, I =2278.3 mm^4/mm
N_f = 19237

k_{M1} = 0.0009 (for $N_f > 5000$)
k_{M2} = 0.0032 (for $N_f > 5000$)
$k_{M3} = 0.120 - 0.018 \log_{10}(N_F)$ when $N_F \leq 100\ 000$
= 0.0429

$D_v/2D_h = 0.339$
$R_B = 0.67 + 0.87\left[(D_v/2D_h) - 0.2\right] for\ 0.2 \leq D_v/2D_h \leq 0.35$
$R_B = 0.7917$

$M_1 = k_{M1} R_B \gamma D_h^3$
M_1 = 11.45 kN-m/m

$M_B = -k_{M2} R_B \lambda D_h^2 H_c$
M_B = -2.71 kN-m/m

$$R_L = \frac{\left[0.265 - 0.053\log_{10}(N_F)\right]}{\left(\frac{H_c}{D_h}\right)^{0.75}} \leq 1.0$$

R_L = 0.2893

$L_c = \frac{A_C}{k_4}$ where k_4 = 2.0m, (Table 6.15, 4 wheels per axle & H_c = 0.6m)
Lc = 250/2 = 125.0 kN/m

$M_C = k_{M3} R_L D_h L_C$
M_C = 13.97 kN-m/m

$M = M_1 + M_B + M_C$
M = 11.45 + (-2.72) +13.97 = 22.71 kN-m/m

$M_{Pf} = \phi_{hc} M_p$
$\phi_{hc} = 0.9,\ M_p = 26.69\ kN-m/m$
M_{Pf} = 24.02 kN-m/m

$$\left[\frac{P}{P_{pf}}\right]^2 + \left|\frac{M}{M_{pf}}\right| \le 1, \text{ P} = 0$$

$$\left|\frac{M}{M_{pf}}\right| = \left|\frac{22.71}{24.02}\right| = 0.94 < 1.0$$

Therefore 6.0 mm plate thickness satisfies wall strength requirements during construction for 0.6 m of cover. It is recommended to check other applicable construction axle loads and cover heights in the same manner.

9.0 Factored Longitudinal Seam Strength *(S_f)*

$T_f < S_f$

Where $S_f = \phi_j S_s$ and: $\phi_j = 0.70$, $S_s = 1840$ kN/m for 6.0 mm plate thickness

S_f = 1288 kN/m

$T_f = 553.4 < S_f$ OK

10.0 Plate thickness difference – Not Applicable

11.0 Radius of Curvature

$\frac{R_{crown}}{R} \le 5.0$, where: $R_{crown} = 5763$ mm, $R_{side} = 2235$ mm

$\frac{5763}{2235} = 2.6$ OK

Example 2

Given: Pipe-arch, 6250 mm span x 3910 mm rise
Height of Cover, H =2.0 m
CL 625 Live Load
Soil Group 1, 90%-95% Standard Proctor Density
Unit Weight of Soil $\gamma = 22\ kN/m^3$
Secant Modulus Es = 12 MPa

Required: Determine wall thickness for a 152 x 51 corrugation

Geometric Data: $D_h = 6.297$ m, $D_v = 5.652$ m (neutral axis)
Crown radius (Rc) = 3175 mm (N.A.), $\theta_{top} = 162.8^0$
Corner or haunch radius (R_2) = 840 mm (N.A.)
Bottom radius (R_3) = 9625 mm (N.A.)

1. Minimum Cover (H_{min}) is the largest of:

a) 0.6 m

b) $\frac{D_h}{6}\left(\frac{D_h}{D_v}\right)^{0.5} = 1.159$ m <u>Governs</u>

c) $0.4\left(\frac{D_h}{D_v}\right)^2 = 0.497\ m$

H_{min} = 1.159 m, H_{min}<H (2.0 m)

2. Dead Load Thrust (T_D)

$T_D = 0.5\ (1.0 - 0.1\ C_S)\ A_f\ W$
$A_f = 1.20$ (Figure 6.13)

$$C_s = \frac{1000 E_S D_v}{EA}$$

Where: E = 200 000 MPa, E_s = 12 MPa
4.0 mm Plate Area = 4.828 mm^2/mm
$C_s = 0.0702$

$$W = \gamma\left[(H\ D_h) + Area\ Between\ \ Springline\ \&\ Crown\right]$$

TopRise = 2.80m, N.A. Inside End Area of structure above springline = 13.596m^2
$W = 22[2.0(6.297) + 4.03]$
$W = 365.85\ kN/m$
$T_D = 0.5[1.0\text{-}0.1(.0702)]1.2(365.85)$
$\boldsymbol{T_D = 217.97\ kN/m}$

3. Live Load Thrust (T_L)

$T_L = 0.5\ (lesser\ of\ D_h\ and\ l_t)\ \sigma_L m_f$

Position as many axles of the CL-625 truck within the span length, (D_h = 6.297 m), at the road surface as would give the maximum total load. In this example, placing axles 2 and 3 above the structure produces the highest total load (P = 250 kN)

1 lane, (m_f =1.0)

$$\sigma_L = \frac{AxleLoad}{l_t w} \text{ where:}$$

l_t = a + 2(H) = 1.45 + 2(2) = 5.45 m
w = b+ H = 2.4 + 2 = 4.4 m

$$\sigma_L = \frac{250}{5.45(4.4)} = 10.42\ kPa$$

$$\sigma_L\ m_f = 10.42\ kPa$$

2 lanes, (m_f =0.9)

l_t (5.45 m) < D_h (6.297 m)
w = b + H = 5.4 + 2 = 7.4 m

$$\sigma_L = \frac{2(250)}{5.45(7.4)} = 12.40\ kPa$$

$\sigma_L\ m_f$ = 11.16 kPa <u>Governs</u>

T_L = 0.5 (lesser of D_h and l_t) $\sigma_L m_f$
= 0.5 (5.45) 11.16
$\boldsymbol{T_L = 30.41\ kN/m}$

4. Earthquake Thrust – Not Applicable

5. Total Factored Thrust (T_f)

$T_f = \alpha_D T_D + \alpha_L T_L\ (1 + DLA)$
$\alpha_D = 1.25$
$\alpha_L = 1.70$
$DLA = 0.40(1\text{-}0.5D_e) \geq 0.10$

Where: $D_e = H = 2.0$m
DLA = 0.10
$T_f = 1.25(217.97) + 1.70(30.41)(1.10)$
$\boldsymbol{T_f = 329.33}$ ***kN/m***

6. Compressive Stress at ULS *(σ)*

$\sigma = \dfrac{T_f}{Area}$ where Area = 4.828 mm²/mm for 4.0 mm plate thickness

σ = 68.2 MPa

7.0 Wall Strength in Compression *(f_b)*

Definition of upper zone

i) $\theta_0 = 1.6 + 0.2\log\left[\dfrac{EI}{E_m R^3}\right]$ radians where:

$$E_m = E_S\left[1 - \left[\frac{R_C}{R_C + 1000\left[H + H'\right]}\right]^2\right]$$

$E_s = 12.0$ MPa, $R = R_c = 3175$mm, $H = 2.0$m, $H' = \dfrac{D_v}{4} = 1.413$ m

$I_{4.0mm} = 1457.6\dfrac{mm^4}{mm}$ then

$E_m = 9.213$ MPa, $\theta_0 = 57.3^0$

ii) $\lambda = 1.22\left[1.0 + 1.6\left[\dfrac{EI}{E_m R_c^3}\right]^{0.25}\right]$

$\lambda = 1.5664$

iii) $K = \lambda\left[\dfrac{EI}{E_m R^3}\right]^{0.25}$

$K = 0.2777$

iv) $\rho = \left[1000\dfrac{(H + H')}{R_c}\right]^{0.5} \leq 1.0$

$\rho = 1.0$

v) $R_e = \dfrac{r}{K}\left[\dfrac{6E\rho}{F_y}\right]^{0.5}$

for 4.0 mm plate thickness, r = 17.38 mm

$R_e = 4520$ mm

vi) $F_m = 1.0$ for single conduit

vii) $R < R_e$

$$f_b = \phi_t F_m\left[F_y - \frac{(F_y KR)^2}{12Er^2\rho}\right]$$

f_b = 138.6 MPa

As $\sigma < f_b$, 4.0 mm plate thickness satisfies compressive stress criteria where R = 3175 mm in the upper zone.

viii) Check Lower Zone Arcs for Wall Strength In Compression

$\lambda = 1.22,\ E_m = E_s = 12\ \text{MPa},\ \rho = 1.0$

R_1 = 3175 mm (top) R_2 = 840 mm (corner), R_3 = 9625 mm (bottom)

	R_1 (Top)	R_2 (Corner)	R_3 (Bottom)
K	0.2025	0.5489	0.0881
R_e	6198 mm	2286 mm	14239 mm
f_b	$R_1 < R_e$ $f_b = 159.9\ MPa$	$R_2 < R_e$ $f_b = 171.6\ MPa$	$R_3 < R_e$ $f_b = 142.0\ MPa$

Where:

$$K = \lambda \left[\frac{EI}{E_m R^3} \right]^{.25}$$

$$R_e = \frac{r}{K} \left[\frac{6E\rho}{F_y} \right]^{0.5} mm$$

$$f_b = \phi_t F_m \left[F_y - \frac{(F_y KR)^2}{12Er^2\rho} \right] MPa \text{ when } R \le R_e$$

As $\sigma(68.2) < f_b$, 4.0 mm plate thickness satisfies compressive stress criteria for all radii within the lower zone.

8. Strength Requirements During Construction

$$\left[\frac{P}{P_{pf}} \right]^2 + \left| \frac{M}{M_{pf}} \right| \le 1$$

Where:

$P = T_D + T_C$ and for $H_c < H_{min}$ $P = 0$

$P_{pf} = \phi_{hc} A F_y$

$M = M_1 + M_B + M_C$

$M_{Pf} = \phi_{hc}\ M_p$

Where:

$M_1 = k_{M1} R_B\, \gamma\, D_h^3$

$M_B = -k_{M2} R_B\, \gamma\, D_h^2 H_c$

$M_C = k_{M3} R_L\, D_h L_C$

Where:

$k_{M1} = 0.0046 - 0.0010 \log_{10}(N_F)$ for $N_F \le 5000$

$= 0.0009$ for $N_F > 5000$

$k_{M2} = 0.018 - 0.004 \log_{10}(N_F)$ for $N_F \le 5000$

$= 0.0032$ for $N_F > 5000$

$k_{M3} = 0.120 - 0.018 \log_{10}(N_F)$ for $N_F \le 100\ 000$

$= 0.030$ for $N_F > 100\ 000$

$R_B = 0.67 + 0.87\left[(D_v/2D_h) - 0.2\right]\ for\ 0.2 \le D_v/2D_h \le 0.35$

$= 0.80 + 1.33\left[(D_v/2D_h) - 0.35\right]\ for\ 0.35 < D_v/2D_h \le 0.50$

$= D_v/D_h\ for\ D_v/2D_h > 0.5$

$$R_L = \frac{\left[0.265 - 0.053 \log_{10}(N_F)\right]}{\left(\frac{H_c}{D_h}\right)^{0.75}} \le 1.0$$

$$L_e = \frac{A_C}{k_4}$$

$$\left|\frac{M}{M_{Pf}}\right| = absolute\ value\ of\ the\ ratio\ \frac{M}{M_{Pf}}$$

$$N_F = E_s\left(1000D_h\right)^3 / EI$$

Select $H_c < H_{min}$, $H_c = 0.6$ m, therefore P=0 as $H_c < H_{min}$

b) Assume Construction Axle (A_c) = 250 kN, 4 wheels per axle
$M = M_1 + M_B + M_C$

Calculate Flexibility Number N_F
$N_F = E_s\left(1000D_h\right)^3 / EI$
$E_s = 12$, $D_h = 6.297$, $I = 1457.6$ mm^4/mm
$N_f = 10278$

$k_{M1} = 0.0009$ (for $N_f > 5000$)
$k_{M2} = 0.0032$ (for $N_f > 5000$)
$k_{M3} = 0.120 - 0.018 \log_{10}(N_F)$ for $N_F \leq 100\ 000$
$= 0.0478$

$D_v/2D_h = 0.4488$
$R_B = 0.80 + 1.33\left[\left(D_v/2D_h\right) - 0.35\right]$ *for* $0.35 < D_v/2D_h \leq 0.50$
$R_B = 0.9314$

$M_1 = k_{M1} R_B\, \gamma\, D_h^3$
$M_1 = 4.60$ kN-m/m

$M_B = -k_{M2}\, R_B\, \lambda\, D_h^2\, H_e$
$M_B = -1.56$ kN-m/m

$$R_L = \frac{\left[0.265 - 0.053\log_{10}\left(N_F\right)\right]}{\left(\frac{H_e}{D_h}\right)^{0.75}} \leq 1.0$$

$R_L = 0.3054$
$L_e = \frac{A_C}{k_4}$ where $k_4 = 2.0$m, (Table 6.15, 4 wheels per axle & $H_e = 0.6$m)
$L_e = 250/2 = 125.0$ kN/m
$M_C = k_{M3}\, R_L\, D_h\, L_C$
$M_C = 11.49$ kN-m/m

$M = M_1 + M_B + M_C$
$M = 4.60 + (-1.56) + 11.49 = 14.53$ kN-m/m

$M_{Pf} = \phi_{hc}\, M_p$
$\phi_{hc} = 0.9, M_p = 16.98\ kN - m/m$
$M_{Pf} = 15.28$ kN-m/m

$$\left[\frac{P}{P_{pf}}\right]^2 + \left|\frac{M}{M_{pf}}\right| \leq 1,\ P = 0$$

$$\left|\frac{M}{M_{pf}}\right| = \left|\frac{14.53}{15.28}\right| = 0.95 < 1.0$$

Therefore 4.0 mm plate thickness satisfies wall strength requirements during construction for 0.6 m of cover. It is recommended to check other applicable construction axle loads and cover heights in the same manner.

9.0 Factored Longitudinal Seam Strength *(S_f)*

$T_f < S_f$

Where $S_f = \phi_j S_s$ and: $\phi_j = 0.70, S_s = 1120$ kN/m for 4.0 mm plate thickness

S_f = 784 kN/m

$T_f = 329.3 < S_f$ OK

10.0 Plate thickness difference – Not Applicable

11.0 Radius of Curvature

$\frac{R_{crown}}{R} \leq 5.0$, where: $R_{crown} = 3175$ mm, $R_{corner} = 840$ mm

$\frac{3175}{840} = 3.8$ OK

<u>Example 3</u>

Given: Metal Box Span 6165 mm Rise 1900 mm (inside crest)
Height of cover, H = 0.9 m (900 mm) to neutral axis of the structural plate
Live Load, LL = CL 625
Soil Group I, 90% 95% Standard Proctor Density
Unit weight of soil $\gamma = 22$ kN/m^3
Find: Crown and haunch plate thickness, reinforcing requirements.
Solution: Corrugations, 381 x 140 mm, $D_h = 6.305$ m, R = 1.970 m (neutral axis)

1. Dimension Requirements

Rise = 1.97 m	> 0.8 m	∴ OK
	< 3.2 m	∴ OK
Span = 6.305 m	> 2.7 m	∴ OK
	< 8.0 m	∴ OK

2. Minimum Cover

$H_{MIN} = 900 - 70 = 830$ mm > 300 mm ∴ OK

3. Dead Load Bending Moments

$$M_D = k_1\gamma D_h^3 + k_2\gamma\left[H - \left[0.3 + \frac{d_c}{2000}\right]\right]D_h^2$$

$k_1 = 0.0053 - 0.00024\,(3.28\,D_h - 12)$
$= 0.0053 - 0.00024\,[3.28\,(6.3) - 12] = 0.00322$

$k_2 = 0.053$

$$M_D = (.00322)(22.0)(6.3)^3 + (0.053)(22.0)\left[0.9 - \left[0.3 + \frac{140}{2000}\right]\right](6.3)^2$$
$$= 17.72 + 24.53 = 42.25 \text{ KN-m/m}$$

$M_{cD} = \kappa M_D$ $\qquad$ $\kappa = 0.70 - 0.0328\ D_h = 0.70 - .0328\ (6.3) = 0.493$

$M_{hD} = (1 - \kappa)\ MD$

$M_{cD} = (0.493)\ (42.25) = 20.83$ kN-m/m

$M_{hD} = (1 - 0.493)\ (42.25) = 21.42$ kN-m/m

4. Live Load Bending Moments

$$M_L = C_1 k_3 L_L D_h$$

$$C_1 = 0.5 + \frac{D_h}{15.24} = 0.5 + \frac{6.3}{15.24} = 0.913 < 1.0 \text{ (multiple axle)}$$

$$k_3 = \left[0.08 - 0.002\left(3.28D_h - 20\right)\right] / \left(\frac{H}{D_h}\right)^{0.2} \text{ for } 6\text{m} < D_h < 8\text{m}$$

$$k_3 = \left[0.08 - 0.002\left(3.28(6.3) - 20\right)\right] / \left(\frac{0.9}{6.3}\right)^{0.2} = 0.1161$$

$L_L = A_L / k_4$ $\qquad$ $A_L = 250$ kN, 4 wheels/axle, $k_4 = 2.7$

$= 250/2.7 = 92.6$ kN/m

$M_L = (0.913)\ (0.116)\ (92.6)\ (6.3) = 61.78$ kN-m/m

$M_{cL} = \kappa M_L = (0.493)\ (61.78) = 30.45$ kN-m/m

$M_{hL} = (1 - \kappa)\ k_R\ M_L$ $\qquad$ $k_R = 0.425H + 0.48$

$= (1 - .493)\ (0.862)\ (61.78)$ $\qquad$ $= 0\ .425\ (0.9) + .48 = 0.862 < 1.0$

$= 26.99$ kN-m/m

5. Earthquake Bending Moments - Not applicable

6. Factored Crown and Haunch Bending Moments

$M_{cf} = \alpha_D\ M_{cD} + \alpha_L\ M_{cL}\ (1 + DLA)$

$M_{hf} = \alpha_D\ M_{hD} + \alpha_L\ M_{hL}\ (1 + DLA)$

$\alpha_D = 1.25$ $\qquad$ $\alpha_L = 1.70$

$DLA = 0.30\ (1.0 - 0.5\ (H)) = 0.30\ (1.0 - 0.5\ (0.9)) = 0.165 > 0.1$ OK

$Mcf = 1.25\ (20.83) + 1.70\ (30.45)\ (1 + 0.165) = 86.34$ kNm/m

$M_{hf} = 1.25\ (21.42) + 1.70\ (26.99)\ (1 + 0.165) = 80.22$ kNm/m

7. Flexural Capacity at Ultimate Limit State

$M_{Pf} = \varphi_h\ M_P$ $\qquad$ $\varphi_h = 0.9$

Try 381 x 140 x 7.01 mm plate

$M_pf = Z \times Fy$

$M_{Pf} = 0.90\ (437.85)\ (300\ \text{MPa})\ (10^{-3})$

$= 118.2$ kNm/m $> M_{cf}$

∴ **OK** for crown. Reinforcement is not required.

M_{Pf} = 0.90 (437.85) (300 MPa) (10^{-3})
= 118.2 kNm/m > M_{hf}

∴ **OK** for haunch. Reinforcement is not required.

8. Fatigue Resistance

Longitudinal bolted seams shall not be located in the vicinity of the crown nor in areas of maximum live load moments at haunches.

9. Bending Moment across a Connection
Bending moments across connections shall be designed at the ultimate limit state for the larger of:

a) the calculated moment due to factored loads at the connections;
b) 75% of the factored resistance of the member, $\varphi_h M_p$.

M_{Pf} = φ_h M_P $\varphi_h = 0.9$
= 0.75 (M_{Pf})
= 0.75 (118.2kNm/m)
= 88.65 kNm/m > $M_{hf,}$ M_{cf}

∴ **OK** for haunch and crown. Reinforcement is not required.

Example 4

Given: Round CSP – 3600 mm inside diameter
Height of Cover, H =8.0 m
CL 625 Live Load
Soil Group 1, 90%-95% Standard Proctor Density
Unit Weight of Soil $\gamma = 22 kN/m^3$
Secant Modulus Es = 12 MPa
Project Location – Vancouver, B.C.

Required: Determine wall thickness for a 125 x 25 corrugation profile

Geometric Data: D_h = 3.625 m, D_v = 3.625 m (neutral axis)
Crown radius (Rc) = 1812 mm (N.A.)

1. Minimum Cover (H_{min})is the largest of:

a) 0.60 m

b) $\frac{D_h}{6}\left(\frac{D_h}{D_v}\right)^{0.5}$ = 0.60 m

c) $0.4\left(\frac{D_h}{D_v}\right)^{2} = 0.40 m$

H_{min} = *0.60 m*, H_{min}<*H (8.0 m)*

2. Dead Load Thrust (T_D)

$T_D = 0.5\ (1.0 - 0.1\ C_S)\ A_f W$
A_f = 1.25 (Figure 6.13)

$$C_s = \frac{1000 E_S D_v}{EA}$$

Where: E = 200 000 MPa, E_s = 12 MPa
4.2 mm wall thickness, Area = 4.521 mm^2/mm
C_s = 0.0481

$W = \gamma\left[(H\ D_h) + Area\ Between\ \ Springline\ \&\ Crown\right]$
TopRise = 1.812 m, N.A. Inside End Area of structure above springline = 5.161m^2
W = 22[8.0(3.625) + 1.41]
W = 669.0 kN/m
T_D *= 0.5[1.0-0.1(.0481)]1.25(669.0)*
T_D = 416.1 kN/m

3. Live Load Thrust (T_L)

T_L *= 0.5 (lesser of D_h and l_t)* $\sigma_L m_f$

Position as many axles of the CL-625 truck within the span length, (D_h = 3.625 m), at the road surface as would give the maximum total load. In this example, placing axles 2 and 3 above the structure produces the highest total load (P = 250 kN)

1 lane, (m_f =1.0)

$$\sigma_L = \frac{AxleLoad}{l_t w} \quad \text{where:}$$

l_t = a + 2(H) = 1.45 + 2(8) = 17.45 m
w = b + H = 2.4 + 8 = 10.4 m

$$\sigma_L = \frac{250}{17.45(10.4)} = 1.37\,kPa$$

$$\sigma_L\, m_f = 1.37\,kPa$$

2 lanes, (m_f =0.9)

l_t (17.45 m) > D_h (3.625 m)
w = b + H = *5.4 + 8 = 13.4 m*

$$\sigma_L = \frac{2(250)}{17.45(13.4)} = 2.14\ kPa$$

$$\sigma_L\, m_f = 1.92\ kPa \qquad \underline{\text{Governs}}$$

T_L = 0.5 (lesser of D_h and l_t) $\sigma_L m_f$
= 0.5 (3.625) 1.92
T_L = 3.48 kN/m

4. Earthquake Thrust

$T_E = T_D A_V$
$T_f = \alpha_D T_D + T_E$
$A_V = 2/3 A_H$
Zonal acceleration ratio *(A)* = 0.2 for Vancouver, $A_H = A$
$A_V = 0.133$
$T_D = 416.2$ *kN/m*
T_E *=(416.2)(0.133)*
T_E = 55.5 kN/m

T_f *= 1.25(416.2) + 55.5*
T_f = 575.7 kN/m (ULS Combination 5)

5. Total Factored Thrust *(T_f)*

$T_f = \alpha_D T_D + \alpha_L T_L$ *(1+ DLA) (ULS Combination 1)*
α_D = 1.25

$\alpha_L = 1.70$
$DLA = 0.40(1-0.5D_e) \geq 0.10$
Where: $D_e = H = 8.0$ m
$DLA = 0.10$
$T_f = 1.25(416.2) + 1.70(3.48)(1.10)$
T_f = 526.8 kN/m (ULS Combination 1)
Therefore ULS Combination 5 governs

T_f = 575.7 kN/m

6. Compressive Stress at ULS *(σ)*

$\sigma = \dfrac{T_f}{Area}$ where Area = 4.521 mm^2/mm for 4.2 mm wall thickness

σ = 127.3 MPa

7.0 Wall Strength in Compression *(f_b)*

Definition of upper zone

i) $\theta_0 = 1.6 + 0.2\log\left[\dfrac{EI}{E_m R^3}\right]$ radians where:

$$E_m = E_S\left[1-\left[\frac{R_C}{R_C + 1000\left[H + H'\right]}\right]^2\right]$$

E_s = 12.0 MPa, R = R_c = 1812 mm, H = 8.0 m, H' = $\dfrac{D_v}{4}$ = 0.906 m

$I_{4.2mm} = 394.84\dfrac{mm^4}{mm}$ then

E_m =11.65 MPa, $\theta_0 = 57.9^0$

ii) $\lambda = 1.22\left[1.0 + 1.6\left[\dfrac{EI}{E_m R_c^3}\right]^{0.25}\right]$

λ = 1.5786

iii) $K = \lambda\left[\dfrac{EI}{E_m R^3}\right]^{0.25}$

K = 0.2899

iv) $\rho = \left[1000\dfrac{(H + H')}{R_c}\right]^{0.5} \leq 1.0$

ρ = 1.0

v) $R_e = \dfrac{r}{K}\left[\dfrac{6E\rho}{F_y}\right]^{0.5}$

for 4.2 mm wall thickness, r = 9.345 mm

R_e = 2328 mm

vi) F_m = 1.0 for single conduit

vii) $R < R_e$

$$f_b = \phi_t F_m \left[F_y - \frac{(F_y KR)^2}{12Er^2\rho} \right] \text{ where: } \phi_t = 0.8$$

$f_b = 128.2\ MPa$

As $\sigma < f_b$, 4.2 mm wall thickness satisfies compressive stress criteria where R = 1812 mm in the upper zone.

viii) Check Lower Zone Arcs for Wall Strength In Compression

$\lambda = 1.22$, $E_m = E_s = 12$ MPa, $\rho = 1.0$

$R_1 = 1812$ mm

	R_1 (Top)
K	0.2224
R_e	3035 mm
f_b	$R_1 < R_e$ $f_b = 151.1\ MPa$

Where:

$$K = \lambda \left[\frac{EI}{E_m R^3} \right]^{.25}$$

$$R_e = \frac{r}{K} \left[\frac{6E\rho}{F_y} \right]^{0.5} mm$$

$$f_b = \phi_t F_m \left[F_y - \frac{(F_y KR)^2}{12Er^2\rho} \right] MPa \text{ when } R \le R_e$$

As $\sigma(127.3) < f_b$, 4.2 mm wall thickness satisfies compressive stress criteria within the lower zone.

8. Strength Requirements During Construction

$$\left[\frac{P}{P_{pf}} \right]^2 + \left| \frac{M}{M_{pf}} \right| \le 1$$

Where:

$P = T_D + T_C$ and for $H_c < H_{min}$ $P = 0$

$P_{pf} = \phi_{hc} A F_y$

$M = M_1 + M_B + M_C$

$M_{Pf} = \phi_{hc} M_p$

Where:

$M_1 = k_{M1} R_B \gamma D_h^3$

$M_B = -k_{M2} R_B \gamma D_h^2 H_e$

$M_C = k_{M3} R_L D_h L_C$

Where:

$k_{M1} = 0.0046 - 0.0010 \log_{10}(N_F)$ for $N_F \le 5000$

$= 0.0009$ for $N_F > 5000$

$k_{M2} = 0.018 - 0.004 \log_{10}(N_F)$ for $N_F \le 5000$

$= 0.0032$ for $N_F > 5000$

$k_{M3} = 0.120 - 0.018 \log_{10}(N_F)$ for $N_F \le 100\ 000$

$= 0.030$ for $N_F > 100\ 000$

$$R_B = 0.67 + 0.87\left[(D_v/2D_h) - 0.2\right] for\ 0.2 \le D_v/2D_h \le 0.35$$
$$= 0.80 + 1.33\left[(D_v/2D_h) - 0.35\right] for\ 0.35 < D_v/2D_h \le 0.50$$
$$= D_v/D_h\ for\ D_v/2D_h > 0.5$$
$$R_L = \frac{\left[0.265 - 0.053\log_{10}(N_F)\right]}{\left(\frac{H_c}{D_h}\right)^{0.75}} \le 1.0$$
$$L_c = \frac{A_C}{k_4}$$
$$\left|\frac{M}{M_{Pf}}\right| = absolute\ value\ of\ the\ ratio\ \frac{M}{M_{Pf}}$$
$$N_F = E_s(1000D_h)^3/EI$$

Select $H_c < H_{min}$, $H_c = 0.6$ m, therefore P=0 as $H_c < H_{min}$

c) Assume Construction Axle (A_c) = 250 kN, 4 wheels per axle
$M = M_1 + M_B + M_C$

Calculate Flexibility Number N_F
$N_F = E_s(1000D_h)^3/EI$

$E_s = 12$, $D_h = 3.625$, $I = 394.84$ mm^4/mm
$N_f = 7238$

$k_{M1} = 0.0009$ (for $N_f > 5000$)
$k_{M2} = 0.0032$ (for $N_f > 5000$)
$k_{M3} = 0.120 - 0.018\log_{10}(N_F)$ for $N_F \le 100\ 000$
$= 0.0505$

$D_v/2D_h = 0.5$
$R_B = 0.80 + 1.33\left[(D_v/2D_h) - 0.35\right] for\ 0.35 < D_v/2D_h \le 0.50$
$R_B = 0.9995$

$M_1 = k_{M1} R_B \gamma D_h^3$
$M_1 = 0.94$ kN-m/m

$M_B = -k_{M2} R_B \gamma D_h^2 H_c$
$M_B = -0.55$ kN-m/m

$$R_L = \frac{\left[0.265 - 0.053\log_{10}(N_F)\right]}{\left(\frac{H_c}{D_h}\right)^{0.75}} \le 1.0$$

$R_L = 0.2329$
$L_c = \frac{A_C}{k_4}$ where $k_4 = 2.0$m, (Table 6.15, 4 wheels per axle & $H_c = 0.6$m)
$L_c = 250/2 = 125.0$ kN/m
$M_C = k_{M3} R_L D_h L_C$
$M_C = 5.33$ kN-m/m

$M = M_1 + M_B + M_C$
$M = 0.94 + (-0.55) + 5.33 = 5.72$ kN-m/m

$$M_{Pf} = \phi_{hc}\, M_p$$

$$\phi_{hc} = 0.9, M_p = 8.78\, kN - m/m$$

M_{Pf} = 7.90 kN-m/m

$$\left[\frac{P}{P_{pf}}\right]^2 + \left|\frac{M}{M_{pf}}\right| \le 1, \text{ P} = 0$$

$$\left|\frac{M}{M_{pf}}\right| = \left|\frac{5.72}{7.90}\right| = 0.72 < 1.0$$

Therefore 4.2 mm wall thickness satisfies wall strength requirements during construction for 0.6m of cover. It is recommended to check other applicable construction axle loads and cover heights in the same manner.

9.0 Factored Longitudinal Seam Strength *(S_f)* - Not applicable to CSP

10.0 Plate thickness difference – Not Applicable to CSP

11.0 Radius of Curvature – Not Applicable to CSP

<u>Example 5</u>

Given: Arch Span 6100 mm Rise 3050 mm (inside radius = 3050 mm)
Height of cover, H = 1.10 m
Live Load, LL = CL - 625
Soil - Group I, 90% - 95% Standard Proctor Density
Unit weight of soil γ = 22 kN/m^3
Secant Modulus Es = 12 MPa

Find: Wall Thickness, try 4 mm.

Solution: Corrugations, 152 x 51 mm, Dh = Dv = 6.151 m, R_c = 3076 (neutral axis)/2.

1. Minimum Cover is the largest of:

a) 0.6 m

b) $\frac{D_h}{6}\left(\frac{D_h}{D_v}\right)^{1/2} = \frac{6.15}{6}\left(\frac{6.15}{6.15}\right)^{1/2} = 1.025m$

c) $0.4\left(\frac{D_h}{D_v}\right)^2 = 0.4\left(\frac{6.15}{6.15}\right)^2 = 0.4m$

∴ Height of cover = 1.10 m > minimum height of cover = 1.03 m, **OK**

2. Dead Load Thrust

$T_D = 0.5\,(1.0 - 0.1\,C_s)\,A_f\,W$

A_f = 1.276 (From Figure 6.13)

$C_s = \frac{1000E_s D_v}{EA}$ where D_v = 6.15 m

E = 200 x10^3 MPa

E_s = 12 MPa

Try 152 x 51 x 4.0 mm thick plate, A = 4.828 mm²/mm

$$C_s = \frac{1000E_s D_v}{EA} = \frac{1000(12)(6.15)}{(200 \times 10^3)(4.828)} = 0.076$$

$W = \gamma[(H\ D_h) + \text{Area above springline \& below crown}]$

$W = 22\ [(1.1)(6.15) + 4.015] = 237.2$ kN/m

$T_D = 0.5\ [1.0 - 0.1(.071)]\ (1.276)\ (237.2) = 150.2$ kN/m

3. Live Load Thrust

$T_L = 0.5$ (lesser of D_h and l_t) $\sigma_L\ m_f$

$D_h = 6.15$ m

Position as many axles of the CL-625 truck as would give the maximum total load. For CL - 625, try axles and lane combinations to find highest pressure. In this example, placing axles 1 through 3 above the structure produces the highest total load (P=300kN).

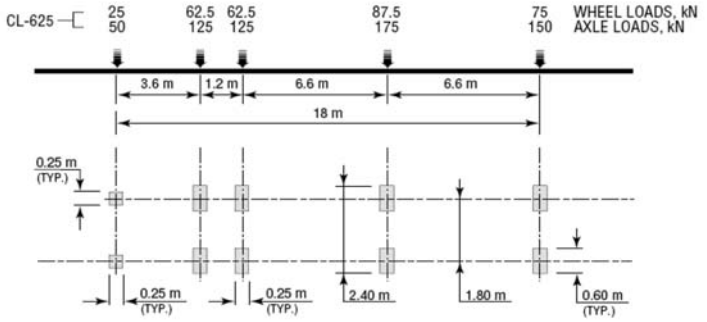

<u>1 Lane</u> $m_f = 1.0$

$l_t = a + 2(H) = 5.05 + 2(1.1) = 7.25$ m > Dh

$w = b + H = 1.8 + 0.6 + 1.1 = 3.5$ m

$$\sigma_L = \frac{AL}{l_l \times w} = \frac{300}{7.25 \times 3.5} = 11.82\ \text{kN/m}^2$$

$\sigma_L\ m_f = (11.82)(1.0) = 11.82$ kN/m² <u>Governs</u>

<u>2 Lane</u> $m_f = 0.9$

$l_t = 5.05 + 2(H) = 5.05 + 2(1.1) = 7.25$ m > Dh

$w = 5.4 + H = 5.4 + 1.1 = 6.5$ m

$$\sigma_L = \frac{2AL}{l_l \times w} = \frac{2(300)}{7.25 \times 6.5} = 12.73\ \text{kN/m}^2$$

$\sigma_L\ mf = (12.73)(0.9) = 11.46$ kN/m²

$T_L = 0.5\ (6.15)\ (11.82)\ (1.0) = 36.35$ kN/m

4. Earthquake Thrust - Not applicable

5. Total Thrust

$T_f = \alpha_D T_D + \alpha_L T_L (1 + DLA)$

$\alpha_D = 1.25$
$\alpha_L = 1.70$
$H = D_E = 1.10$ m $\quad \therefore DLA = 0.4(1.0 - 0.5 D_E), \geq 0.10$
$= 0.4(1.0 - 0.5 (1.1)) = 0.18$

$T_f = 1.25 (150.2) + 1.70 (36.35) (1 + 0.18) = 260.7$ kN/m

6. Compressive Stress at the ULS

$\sigma = T_f/A = 260.7/4.828 = 53.99$MPa

7. Wall Strength in Compression

Upper portion:

i) $E_m = E_s\left[1-\left(\frac{R_c}{R_c+1000(H+H')}\right)^2\right]$

H' = Min (D_v /4 and Rise / 2) = Min (6.15/4 and 3.05/2) = 1.525

$$E_m = E_s\left[1-\left(\frac{R_c}{R_c+1000(H+H')}\right)^2\right] = 12.0\left[1-\left(\frac{3076}{3076+1000(1.100+1.525)}\right)^2\right] = 8.51$$

ii) $\lambda = 1.22\left[1.0+1.6\left(\frac{EI}{E_m R_c^3}\right)^{1/4}\right] = 1.22\left[1.0+1.6\left(\frac{(200\times10^3)\times(1457.56)}{(8.51)(3076)^3}\right)^{1/4}\right] = 1.58$

iii) $K = \lambda\left[\frac{EI}{E_m R^3}\right]^{1/4} = 1.58\left[\frac{(200\times10^3)(1457.56)}{(8.51)(3076)^3}\right]^{1/4} = 0.29$

iv) $\rho = \left(1000\frac{(H+H')}{R_c}\right)^{1/2} = \left(1000\frac{(1.100+1.525)}{3076}\right)^{1/2} = 0.924 \leq 1.0$

v) $R_e = \frac{r}{K}\left(\frac{6E\tilde{n}}{F_y}\right)^{1/2} = \frac{17.38}{0.29}\left(\frac{6(200\times10^3)(0.924)}{230}\right)^{1/2} = 4117 > R = 3076$

vi) $F_m = 1.0$ for single conduit

$R < R_e$

$$f_b = \phi_t F_m\left[F_y - \frac{(F_y KR)^2}{12Er^2\tilde{n}}\right] = \phi_t F_m\left[F_y - \frac{(F_y KR)^2}{12Er^2\tilde{n}}\right]$$

$$= 0.8(1.0)\left[230 - \frac{\{(230)(0.29)(3076)\}^2}{12(200\times10^3)(17.38)^2(0.924)}\right] = 132.7\text{ MPa} > \sigma = 53.99\text{ MPa}$$

$\therefore$4 mm plate thickness satisfies the strength requirements in compression.

8. Strength Requirements during Construction

$$\left(\frac{P}{P_{Pf}}\right)^2 + \left|\frac{M}{M_{Pf}}\right| \le 1.0$$

$P = T_D + T_C$

$P_{Pf} = \phi_{hc} A F_y$

$P_{pf} = \phi_{hc}$ A Fy = (0.90) (4.828 mm2/mm) (230 MPa) = 999.4 kN/m

$M_{pf} = \phi_{hc} M_p = \phi_{hc} Z F_y$

$M_{pf} = 0.90\ (73.826)\ (230)\ (10^{-3}) = 15.3$ kN-m/m

$M = M_I + M_B + M_C$

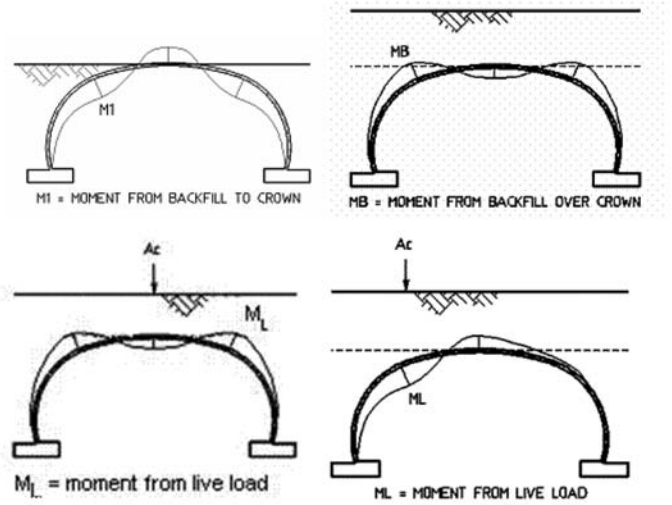

$M_1 = k_{M1} R_B \gamma D_h^3$

$$N_f = \frac{E_s (1000 D_h)^3}{EI} = \frac{12[(1000)(6.15)]^3}{(200 \times 10^3 \times 1457.56)} = 9579.9$$

$k_{M1} = 0.0009$; ($N_f > 5000$)

$k_{M2} = 0.0032$; ($N_f > 5000$)

$k_{M3} = 0.120 - 0.018 \log10\ (9579.9) = 0.048$; ($N_f < 100{,}000$)

$R_B = 0.80 + 1.33\ [D_v/2D_h - 0.35]$ for $0.35 < D_v/2D_h = 0.50 \quad 0.50$

$R_B = 0.80 + 1.33\ [0.50 - 0.35] = 1.0$

$M_1 = 0.0009\ (1.0)\ (22.0)\ (6.15)^3 = 4.61$ kN-m/m

$M_B = -\ k_{M2}\ R_B\ \gamma\ D_h^2 H_c = -\ 0.0032\ (1.0)\ (22.0)\ (6.15)^2\ (1.1) = -2.93$ kN-m/m

$Mc = k_{M3}\ R_L\ D_h\ L_c$

$R_L = [0.265 - 0.053 \log10\ (N_f)]/(H_c/D_h)^{0.75} = 0.196 < 1.0$

$L_c = A_c/k_4$

k_4 (Table6.15, 4 wheels/axle & H = 1.10 m); $k_4 = 3.07$

$L_c = 250/3.07 = 81.5$ kN/m

$M_c = 0.048\ (0.196)\ (6.15)\ (81.5) = 4.76$ kN-m/m
$M = M_1 + M_B + M_c$
$M = 4.61 + (-2.93) + 4.76 = 6.44$ kN-m/m
Recalculate ratio using P, and other new value.

$$\left(\frac{P}{P_{Pf}}\right)^2 + \left|\frac{M}{M_{Pf}}\right| = \left(\frac{186.6}{999.4}\right)^2 + \left|\frac{6.44}{15.3}\right| = 0.456 \quad \leq 1.0$$

$\therefore$ 4 plate thickness satisfies the strength requirements during construction, **OK**

Check any other applicable construction axle loads and cover heights in same manner.

9. Connection Strength

$S_r = \phi_j S_s = 0.70(1120 \text{ kN/m}) = 784$ kN/m

$T_f = 260.7$ kN/m $< S_r \therefore$ OK

10. Difference in Plate Thickness – All plates are the same thickness. Not applicable

11. Radius of Curvature – Not applicable, single radius

Example 6

Given: Arch Span 11000 mm x Rise 6385 mm (inside crest)
Height of cover, H = 2.5 m
Live Load, LL = CL 625
Unit weight of soil $\gamma = 22$ kN/m^3
Soil Group I , 90% ~ 95% Standard Proctor Density
Secant Modulus Es = 12 MPa
Find: Wall Thickness. Try 8 gauge (4.18 mm) plates.
Solution: Corrugations, 381 x 140 mm, $D_h = 11.14$ m, $D_v = 9.8$ m, $R_c = 6700$ (neutral axis), $R_{side} = 4700$ (neutral axis)

1. Minimum Cover:

Smaller of 1.5 m and the largest of

a) 0.6 m

b) $\frac{D_h}{6}\left(\frac{D_h}{D_v}\right)^{1/2} = \frac{11.14}{6}\left(\frac{11.14}{9.8}\right)^{1/2} = 1.98$m or

c) $0.4\left(\frac{D_h}{D_v}\right)^2 = 0.4\left(\frac{11.14}{9.8}\right)^2 = 0.52$m

$\therefore$ Height of cover = 2.5 m > minimum height of cover = 1.5 m, **OK**

2. Dead Load Thrust

$T_D = 0.5\ (1.0 - 0.1\ C_s)\ A_f\ W$

$A_f = 1.218$ (From Figure 6.13)

$C_s = \dfrac{1000E_sD_v}{EA}$ where $D_v = 9.8$ m
$E = 200 \times 10^3$ MPa
$E_s = 12$ MPa

Try 381 x 140 x 4.18 mm thick plate, A = 5.846 mm²/mm

$$C_s = \frac{1000E_sD_v}{EA} = \frac{1000(12)(9.8)}{(200 \times 10^3)(5.846)} = 0.101$$

$W = \gamma[(H\ D_h) + \text{Area above springline \& below crown}]$

$W = 22\ [(2.5)(11.14) + 9.648] = 824.96$ kN/m

$T_D = 0.5\ [1.0 - 0.1(.101)]\ (1.218)\ (824.96) = 497.33$ kN/m

3. Live Load Thrust

$T_L = 0.5$ (lesser of D_h and l_t) $\sigma_L\ m_f$

$D_h = 11.14$ m

For CL - 625 LL, AL = 0.4 (625) = 250 kN Tandem

Position as many axles of the CL-625 truck as would give the maximum total load. For CL - 625, try axles and lane combinations to find highest pressure. In this example, placing axles 4 and 5 above the structure produces the highest total load (P=325kN).

<u>1 Lane</u> $m_f = 1.0$
$l_t = 6.85 + 2(H) = 6.85 + 2(2.5) = 11.85$ m > Dh
$w = 2.4 + H = 2.4 + 2.5 = 4.9$ m

$$\sigma_L = \frac{AL}{l_l \times w} = \frac{325}{11.85 \times 4.9} = 5.60\,\text{kN/m}^2$$

$\sigma_L\ m_f = (5.60)(1.0) = 5.60$ kN/m²

<u>2 Lane</u> $m_f = 0.9$
$l_t = 6.85 + 2(H)\ 6.85 + 2(2.5) = 11.85$ m Dh
$w = 5.4 + H = 5.4 + 2.5 = 7.9$ m

$$\sigma_L = \frac{2AL}{l_l \times w} = \frac{2(325)}{11.85 \times 7.9} = 6.94\,\text{kN/m}^2$$

$\sigma_L\ m_f = (6.94)(0.9) = 6.24$ kN/m² <u>Governs</u>

$T_L = 0.5\ (11.14)\ (6.24) = 34.7$kN/m

4. Earthquake Thrust - Not applicable

5. Total Thrust

$T_f = \alpha_D\ T_D + \alpha_L\ T_L\ (1 + DLA)$

$\alpha_D = 1.25$
$\alpha_L = 1.70$

$DLA = \text{maximum}\ (0.1,\ 0.4\left(1 - \dfrac{H}{2}\right)$ $\therefore$ DLA = 0.1

$T_f = 1.25\ (497.33) + 1.70\ (34.7)\ (1 + 0.1) = 686.6\text{kN/m}$

6. Compressive Stress at the ULS

$\sigma = T_f/A = 686.6/5.846 = 117.4\text{MPa}$

7. Wall Strength in Compression

Upper portion with the largest radius is the worst case scenario. Check upper portion only:

i) $E_m = E_s\left[1-\left(\dfrac{R_c}{R_c+1000(H+H')}\right)^2\right]$

H' = Min (D_v /4 and Rise / 2) = Min (9.80/4 and 6.385/2) = 2.45

$$E_m = E_s\left[1-\left(\frac{R_c}{R_c+1000(H+H')}\right)^2\right] = 12.0\left[1-\left(\frac{6700}{6700+1000(2.5+2.45)}\right)^2\right] = 8.03$$

ii) $\lambda = 1.22\left[1.0+1.6\left(\dfrac{EI}{E_m R_c^3}\right)^{1/4}\right] = 1.22\left[1.0+1.6\left(\dfrac{(200\times10^3)\times(14333.9)}{(8.03)(6700)^3}\right)^{1/4}\right] = 1.58$

iii) $K = \lambda\left[\dfrac{EI}{E_m R^3}\right]^{1/4} = 1.58\left[\dfrac{(200\times10^3)(14333.9)}{(8.03)(6700)^3}\right]^{1/4} = 0.29$

iv) $\rho = \left(1000\dfrac{(H+H')}{R_c}\right)^{1/2} = \left(1000\dfrac{(2.5+2.45)}{6700}\right)^{1/2} = 0.86 \le 1.0$

v) $R_e = \dfrac{r}{K}\left(\dfrac{6E\tilde{n}}{F_y}\right)^{1/2} = \dfrac{49.52}{0.29}\left(\dfrac{6(200\times10^3)(0.86)}{300}\right)^{1/2} = 9887 > R = 6700$

vi) $F_m = 1.0$ for single conduit

$R < R_e$

$$f_b = \phi_t F_m\left[F_y - \frac{(F_y KR)^2}{12Er^2\tilde{n}}\right] = \phi_t F_m\left[F_y - \frac{(F_y KR)^2}{12Er^2\tilde{n}}\right]$$

$$= 0.8(1.0)\left[300 - \frac{\{(300)(0.29)(6700)\}^2}{12(200\times10^3)(49.52)^2(0.86)}\right] = 184.9\,\text{MPa} > \sigma = 117.4\text{MPa}$$

∴4.18 plate thickness satisfies the strength requirements in compression, OK

8. Strength Requirements during Construction

Check a CAT D4 Dozer applied to 1.0 m of cover.

$$\left(\frac{P}{P_{Pf}}\right)^2 + \left|\frac{M}{M_{Pf}}\right| \le 1.0$$

$P = T_D + T_C$

$P_{Pf} = \phi_{hc} A F_y$

$M = M_I + M_B + M_C$

$M_{pf} = \phi_{hc} M_p$

For $H_c/D_h < 0.2$, $P = 0.0$

Check $H_c = 1.00$ m & $A_c = 38$ kN (construction axle load)

$H_c/D_h = 1.0/11.14 = 0.09 < 0.2$

$P = 0.0$ kN/m

$P_{pf} = \phi_{hc}$ A Fy = (0.90) (5.846 mm^2/mm) (300 MPa) = 1578.4 kN/m

$M = M_I + M_B + M_C$

$$M_1 = k_{M1} R_B \gamma D_h^3$$

$$N_f = \frac{E_s (1000 D_h)^3}{EI} = \frac{12[(1000)(11.14)]^3}{(200 \times 10^3 \times 14333.9)} = 5787$$

$k_{M1} = 0.0009$; ($N_f > 5000$)

$k_{M2} = 0.0032$; ($N_f > 5000$)

$k_{M3} = 0.120 - 0.018 \log10 (5787) = 0.0523$; ($N_f < 100{,}000$)

$R_B = 0.80 + 1.33 [D_v/2D_h - 0.35]$ for $0.35 < D_v/2D_h = 0.44$ 0.5

$R_B = 0.80 + 1.33 [0.44 - 0.35] = 0.92$

$M_1 = 0.0009 (0.92) (22.0) (11.14)^3 = 25.17$ kN-m/m

$M_B = - k_{M2} R_B \gamma D_h^2 H_c = - 0.0032 (0.92) (22.0) (11.14)^2 (1.0) = -8.03$ kN-m/m

$Mc = k_{M3} R_L D_h L_c$

$R_L = [0.265 - 0.053 \log10 (N_f)]/(H_c/D_h)^{0.75} = 0.40 < 1.0$

$L_c = A_c/k_4$

k_4 (Table6.15, 2 wheels/axle & H = 1.0 m); $k_4 = 2.367$

$L_c = 38/2.367 = 16$ kN/m

$M_c = 0.0523 (0.4) (11.14) (16) = 3.7$ kN-m/m

$M = M_1 + M_B + M_c$

$M = 25.17 + (-8.03) + 3.7 = 20.9$ kN-m/m

$M_{pf} = \phi_{hc} M_p = \phi_{hc} Z F_y$

$M_{pf} = 0.90 (260.15) (300) (10^{-3}) = 70.2$ kN-m/m

$$\left(\frac{P}{P_{Pf}}\right)^2 + \left|\frac{M}{M_{Pf}}\right| = \left(\frac{0}{1578.4}\right)^2 + \left|\frac{20.9}{70.2}\right| = 0.30 \le 1.0$$

∴4.18 mm plate thickness satisfies the strength requirements during construction, OK

Check any other applicable construction axle loads and cover heights in same manner.

9. Strength Requirements for Completed Structure

$$\left(\frac{T_f}{P_{Pf}}\right)^2 + \left|\frac{M_f}{M_{Pf}}\right| \le 1.0$$

$T_f = \alpha_D T_D + \alpha_L T_L (1 + DLA)$

$P_{Pf} = \phi_h A F_y$

$$M_f = |\alpha_D M_1 + \alpha_D M_D| + \alpha_L M_L (1 + DLA)$$

$M_{pf} = \phi_h M_p$

$T_f = 1.25\ (497.3) + 1.70\ (334.7)\ (1 + 0.1) = 686.6 kN/m$

$P_{pf} = \phi_h\ A\ Fy = (0.85)\ (5.846\ mm^2/mm)\ (300\ MPa) = 1490.7\ kN/m$

$$M_1 = k_{M1} R_B \gamma D_h^3$$

$$N_f = \frac{E_s (1000 D_h)^3}{EI} = \frac{12[(1000)(11.14)]^3}{(200 \times 10^3 \times 14333.9)} = 5787$$

$k_{M1} = 0.0009;\ (N_f > 5000)$

$R_B = 0.80 + 1.33\ [D_v/2D_h - 0.35]$ for $0.35 < D_v/2D_h = 0.44\ \ 0.5$

$R_B = 0.80 + 1.33\ [0.44 - 0.35] = 0.92$

$M_1 = 0.0009\ (0.92)\ (22.0)\ (11.14)^3 = 25.17\ kN\text{-}m/m$

$$M_D = -k_{M2} R_B \gamma D_h^2 H$$

$k_{M2} = 0.0032;\ (N_f > 5000)$

$M_D = -.0032(0.92)(22.0)(11.14)^2(2.5) = -20.09\ kN\text{-}m/m$

$$M_L = \frac{k_{M3} R_U D_h A_L}{k_4}$$

$k_{M3} = 0.120 - 0.018\ \log10\ (5787) = 0.0523;\ (N_f < 100{,}000)$

$$R_U = \frac{0.265 - 0.053 Log_{10} N_F}{(H/D_h)^{0.75}} = \frac{0.265 - 0.053 Log_{10}(5787)}{(2.5/11.14)^{0.75}} = 0.201 \leq 1.0$$

k_4 (Table 6.18, 4 wheels/axle & H = 2.5 m); $k_4 = 4.622$

$$M_L = \frac{k_{M3} R_U D_h A_L}{k_4} = \frac{.0523(.201)(11.14)(250)}{4.622} = 6.33\ kN\text{-}m/m$$

$$M_f = |(1.25)(25.17) + (1.25)(-20.09)| + 1.7(6.33)(1 + 0.1) = 18.19\ kN\text{-}m/m$$

$M_{pf} = \phi_h\ M_p = \phi_h\ Z\ F_y$

$M_{pf} = 0.85\ (260.15)\ (300)\ (10^{-3}) = 66.33\ kN\text{-}m/m$

$$\left(\frac{P}{P_{Pf}}\right)^2 + \left|\frac{M}{M_{Pf}}\right| = \left(\frac{686.6}{1490.7}\right)^2 + \left|\frac{18.19}{66.33}\right| = 0.482 \leq 1.0$$

$\therefore$4.18 mm plate thickness satisfies the strength requirements for completed structure, **OK**

10. Connection Strength

$S_r = \phi_j S_s = 0.7\ (1270\ kN/m) = 889\ kN/m$

$T_f = 686.6 kN/m < S_r\ \therefore$ OK

11. Difference in Plate Thickness: Not applicable since plates are the same thickness.

12. Radius of Curvature

$R \geq 0.2\ R_c$ $\qquad R_c = 6700\ mm,\ R_{side} = 4700\ mm$

$R = 4700\ \geq 0.2\ (6700) = 1340\ mm\ \therefore$ **OK**

Example 7

Given: Deep Corrugated Structural Plate Arch
13000 mm span x 6512 mm rise
Height of Cover, H =3.0 m
CL 625 Live Load
Soil Group 1, 90%-95% Standard Proctor Density
Unit Weight of Soil $\gamma = 22\ kN/m^3$
Secant Modulus Es = 12 MPa
Construction Vehicle Axle Load =250 kN (axle has 4 wheels)
Overall width of wheels = 2400 mm

Required: Determine wall thickness for a 400 x 150 corrugation

Geometric Data: D_h = 13.15 m, D_v = 13.15 m (neutral axis)
Crown radius (Rc) = 6575 mm (N.A.), θ_{top} =180.2°

1. Minimum Cover (H_{min})is the largest of:

a) 0.6 m

b) $\frac{D_h}{6}\left(\frac{D_h}{D_v}\right)^{0.5} = 2.19$ m

c) $0.4\left(\frac{D_h}{D_v}\right)^{2} = 0.4\ m$

For deep corrugated structures H_{min} shall be the smaller of 1.5m and the minimum depth of cover for structures with shallow corrugations but the same conduit size. Therefore H_{min} = 1.50 m governs. H_{min}<H (3. 0m)

2. Dead Load Thrust (T_D)

$T_D = 0.5\ (1.0 - 0.1\ C_S)\ A_f\ W$
A_f= 1.264 (Figure 6.13)

$$C_s = \frac{1000 E_S D_v}{EA}$$

Where: E = 200 000 MPa, E_s = 12 MPa, 5.0 mm Plate Area = 6.811 mm²/mm
C_s = 0.1158

$$W = \gamma\left[(HD_h) + Area\ Between\ \ Springline\ \&\ Crown\right]$$

TopRise = 6.575 m
N.A. Inside End Area of structure above springline = 67.906 m²
$W = 22[3.0(13.15)+18.56] = 1276.1\ kN/m$
$T_D = 0.5[1.0-0.1(0.1158)]1.264(1276.1)$
$\boldsymbol{T_D = 797.1\ kN/m}$

3. Live Load Thrust (T_L)

$T_L = 0.5\ (lesser\ of\ D_h\ and\ l_t)\ \sigma_L m_f$

Position as many axles of the CL-625 truck within the span length, (D_h = 13.15 m), at the road surface as would give the maximum total load. In this example, placing axles 2, 3 and 4 above the structure produces the highest total load (P = 425 kN)

1 lane, (m_f =1.0)

$$\sigma_L = \frac{AxleLoad}{l_t w}$$

where: $l_t = a + 2(H) = 1.2 + 6.6 + 0.25 + 2(3) = 14.05$ m
$w = b + H = 2.4 + 3.0 = 5.4$ m

$$\sigma_L = \frac{425}{14.05(5.4)} = 5.6\ kPa$$

$$\sigma_L m_f = 5.6\ kPa$$

2 lanes, (m_f =0.9)
l_t (14.05 m) > D_h (13.15m) D_h governs
$w = b + H = 5.4 + 3.0 = 8.4$ m

$$\sigma_L = \frac{2(425)}{14.05(8.4)} = 7.2\,kPa$$

$\sigma_L m_f = 6.48\ kPa$ <u>Governs</u>

T_L = 0.5 (lesser of D_h and l_t) $\sigma_L m_f$
= 0.5 (13.15) 6.48

T_L = 42.6 kN/m

4. Earthquake Thrust – Not Applicable

5. Total Factored Thrust *(T_f)*

$T_f = \alpha_D T_D + \alpha_L T_L\ (1 + DLA)$
$\alpha_D = 1.25$
$\alpha_L = 1.70$
$DLA = 0.40(1-0.5D_e) \geq 0.10$
Where: $D_e = H = 3.0$ m
$DLA = 0.10$
$T_f = 1.25(797.1) + 1.70(42.6)(1.1)$
T_f = 1076.0 kN/m

6. Compressive Stress at ULS *(σ)*

$\sigma = \dfrac{T_f}{Area}$ where Area = 6.811 mm^2/mm for 5.0 mm plate thickness

σ = 158.0 MPa

7.0 Wall Strength in Compression
Definition of upper zone

i) $\theta_0 = 1.6 + 0.2\log\left[\dfrac{EI}{E_m R^3}\right]$ radians where:

$$E_m = E_S\left[1 - \left[\frac{R_C}{R_C + 1000\left[H + H'\right]}\right]^2\right]$$

E_s = 12.0 MPa, R = R_c = 6575mm, H = 3.0m, H' = $\dfrac{D_v}{4}$ = 3.287 m

$I_{5.0mm} = 19060.0\dfrac{mm^4}{mm}$ then

E_m = 8.864 MPa, $\theta_0 = 59.4^0$

ii) $\lambda = 1.22\left[1.0 + 1.6\left[\dfrac{EI}{E_m R_c^3}\right]^{0.25}\right]$

λ = 1.605

iii) $K = \lambda \left[\frac{EI}{E_m R^3} \right]^{0.25}$

$K = 0.3165$

iv) $\rho = \left[1000 \frac{(H + H')}{R_c} \right]^{0.5} \leq 1.0$

$\rho = 0.9779$

v) $R_e = \frac{r}{K} \left[\frac{6E\rho}{F_y} \right]^{0.5}$, $F_y = 300\ MPa$

for 5.0 mm plate thickness, r = 52.90 mm

$R_e = 10452$ mm

vi) $F_m = 1.0$ for single conduit

vii) $R < R_e$

$f_b = \phi_t F_m \left[F_y - \frac{(F_y KR)^2}{12Er^2\rho} \right]$, $\phi_t = 0.8$, $F_y = 300\ MPa$

f_b = 192.5 MPa

As $\sigma < f_b$, 5.0 mm plate thickness satisfies compressive stress criteria where R =6575 mm in the upper zone.

viii) Check Lower Zone Arc for Wall Strength in Compression

$\lambda = 1.22$, $E_m = E_s = 12$ MPa, $\rho = 0.9779$

$R_2 = 6575$ mm

	R_2 (6575 mm)
K	0.2231
R_e	14832 mm
f_b	$R_2 < R_e$ $f_b = 216.4\ MPa$

Where:

$K = \lambda \left[\frac{EI}{E_m R^3} \right]^{.25}$

$R_e = \frac{r}{K} \left[\frac{6E\rho}{F_y} \right]^{0.5} mm$

$f_b = \phi_t F_m \left[F_y - \frac{(F_y KR)^2}{12Er^2\rho} \right] MPa$

when $R \leq R_e$

As $\sigma(158.0) < f_b(192.5)$, 5.0 mm plate thickness satisfies compressive stress criteria for the radius within the lower zone.

8.0 Strength Requirements During Construction

$$\left[\frac{P}{P_{pf}}\right]^2 + \left|\frac{M}{M_{pf}}\right| \le 1$$

Where:

$P = T_D + T_C$ and for $H_c < H_{min}$ $P = 0$

$P_{pf} = \phi_{hc} A F_y$

$M = M_1 + M_B + M_C$

$M_{pf} = \phi_{hc}\ M_p$

Where:

$M_1 = k_{M1} R_B\, \gamma\, D_h^3$

$M_B = -k_{M2} R_B\, \gamma\, D_h^2 H_c$

$M_C = k_{M3} R_L\, D_h\, L_C$

Where:

$k_{M1} = 0.0046 - 0.0010 \log_{10}(N_F)$ for $N_F \le 5000$

$= 0.0009$ for $N_F > 5000$

$k_{M2} = 0.018 - 0.004 \log_{10}(N_F)$ for $N_F \le 5000$

$= 0.0032$ for $N_F > 5000$

$k_{M3} = 0.120 - 0.018 \log_{10}(N_F)$ for $N_F \le 100\,000$

$= 0.030$ for $N_F > 100\,000$

$$R_B = 0.67 + 0.87\left[(D_v/2D_h) - 0.2\right] for\ 0.2 \le D_v/2D_h \le 0.35$$

$$= 0.80 + 1.33\left[(D_v/2D_h) - 0.35\right] for\ 0.35 < D_v/2D_h \le 0.50$$

$$= D_v/D_h\ for\ D_v/2D_h > 0.5$$

$$R_L = \frac{\left[0.265 - 0.053\log_{10}(N_F)\right]}{\left(\frac{H_c}{D_h}\right)^{0.75}} \le 1.0$$

$$L_c = \frac{A_C}{k_4}$$

$$\left|\frac{M}{M_{pf}}\right| = absolute\ value\ of\ the\ ratio\ \frac{M}{M_{pf}}$$

$$N_F = E_s(1000D_h)^3 / EI$$

Select $H_c = H_{min}$, $H_c = 1.5$ m, therefore $P = 0$

d) Construction Axle (A_c) = 250 kN, 4 wheels per axle

$M = M_1 + M_B + M_C$

Calculate Flexibility Number N_F

$N_F = E_s(1000D_h)^3 / EI$

$E_s = 12$, $D_h = 13.15$, $I = 19060.0$ mm^4/mm

$N_f = 7158$

$k_{M1} = 0.0009$ (for $N_f > 5000$)

$k_{M2} = 0.0032$ (for $N_f > 5000$)

$k_{M3} = 0.120 - 0.018 \log_{10}(N_F)$ when $N_F \le 100\,000$

$= 0.0506$

$D_v/2D_h = 0.5$

$R_B = 0.80 + 1.33\left[(D_v/2D_h) - 0.35\right] for\ 0.35 < D_v/2D_h \le 0.50$

$R_B = 0.9995$

$M_1 = k_{M1} R_B \gamma D_h^3$
M_1 = 45.0 kN-m/m
$M_B = -k_{M2} R_B \gamma D_h^2 H_c$
M_B = -18.25 kN-m/m

$$R_L = \frac{\left[0.265 - 0.053\log_{10}(N_F)\right]}{\left(\frac{H_c}{D_h}\right)^{0.75}} \leq 1.0$$

R_L = 0.3092

$L_c = \frac{A_C}{k_4}$ where k_4 = 3.8 m, (Table 6.15, 4 wheels per axle & H_c = 1.5 m)
Lc = 250/3.8 = 65.8 kN/m

$M_C = k_{M3} R_L D_h L_C$
M_C = 13.54 kN-m/m

$M = M_1 + M_B + M_C$
M = 45.0 + (-18.25) +13.54 = 40.28 kN-m/m

$M_{Pf} = \phi_{hc} M_p$
$\phi_{hc} = 0.9,\ M_p = 96.5\ kN - m/m$
M_{Pf} = 86.85 kN-m/m

$$\left[\frac{P}{P_{pf}}\right]^2 + \left|\frac{M}{M_{pf}}\right| \leq 1,\ P = 0$$
$$\left|\frac{M}{M_{pf}}\right| = \left|\frac{40.28}{86.85}\right| = 0.463 < 1.0$$

Therefore 5.0 mm plate thickness satisfies wall strength requirements during construction for 1.5 m of cover. It is recommended to check other applicable construction axle loads and cover heights in the same manner.

9.0 Factored Longitudinal Seam Strength *(S_f)*

$T_f < S_f$

Where $S_f = \phi_j S_s$ and: $\phi_j = 0.70, S_s$ = 1735 kN/m for 5.0 mm plate thickness

S_f = 1215 kN/m

T_f =1076.0 < S_f OK

10.0 Plate thickness difference – Not Applicable

11.0 Radius of Curvature – Not Applicable for single radius arch

12.0 Wall Strength of Completed Structure
(Applicable for deep corrugated structures only)

$$\left[\frac{T_f}{P_{pf}}\right]^2 + \left|\frac{M_f}{M_{pf}}\right| \leq 1.0 \qquad \text{where:}$$

Factored Compressive Strength of Section $(P_{pf}) = \phi_h A F_y$

Factored Plastic Moment Capacity of Section $(M_{pf}) = \phi_h M_p$

Maximum Thrust due to factored loads $(T_f) = 1076.0\ kN/m$ (*step* 5)

Maximum Moment due to factored loads -

$$M_f = \left|\alpha_D M_1 + \alpha_D M_D\right| + \alpha_L M_L (1 + DLA)$$

Where: $M_1 = k_{M1} R_B \gamma D_h^3$

$M_D = -k_{M2} R_B \gamma D_h^2 H_e$ where H_e = smaller of H and $D_h/2$

$M_L = k_{M3} R_U D_h A_L / k_4$

$$R_u = \frac{\left[0.265 - 0.053\log_{10}(N_F)\right]}{\left(\frac{H}{D_h}\right)^{0.75}} \leq 1.0$$

Previously calculated (step 8b):
$k_{m1} = 0.0009$, $k_{m2} = 0.0032$, $k_{m3} = 0.0506$, $R_B = 0.9995$, $N_F = 7158$
M_1 = 45.0 kN-m/m

H = 3.0m, $D_h/2$ = 13.15/2 = 6.575m, therefore H_e = 3.0m
M_D = -0.0032*0.9995*22.0*13.15^2*3.0
M_D = -36.5 kN-m/m

R_u = 0.1839
A_L = 250 kN
k_4 = 4.9m (Table 6.15, 4 wheels per axle & H =3.0m)
M_L = 0.0506*0.1839*13.15*250/4.9
M_L = 6.24 kN-m/m

M_f = |1.25(45.0 + (-36.5))| + 1.70(6.24)(1.0 + 0.10)
M_f = 22.3 kN-m/m

$M_{pf} = \phi_h M_p$
Where: $\phi_h = 0.85$, M_p = 96.5 kN-m/m for 5.0mm plate thickness
***M_{pf}* = 82.0 kN-m/m**

$$\left|\frac{M_f}{M_{pf}}\right| = \frac{22.3}{82.0} = 0.27$$

$P_{pf} = \phi_h A F_y$
Where: $\phi_h = 0.85$, A = 6.811 mm^2/mm, F_y =300 MPa
P_{pf} = 1736.8 kN/m

$$\left[\frac{T_f}{P_{pf}}\right]^2 = 0.38$$

$$\left[\frac{T_f}{P_{pf}}\right]^2 + \left|\frac{M_f}{M_{pf}}\right| = 0.65, < 1.0$$

Therefore 5.0 mm plate thickness satisfies wall strength of completed structure.

DESIGN OF FITTINGS REINFORCEMENT

In storm drain projects, branch lines are commonly connected to the main line. Because of the hole cut in the main line for the branch connection, reinforcement may be required. Industry practices have, however, varied. The National Corrugated Steel Pipe Association therefore commissioned a study to develop a standard basis for determining reinforcement requirements.

In Phase 1 of this project, a methodology for addressing the problem was developed based on the finite element method. In Phase 2 of this project, specific reinforcement requirements were established for corrugated steel pipe with main line diameters up to 1200mm, and with branch line diameters from 600 mm up to the diameter of the pipe. Specific wall thicknesses from 1.6 to 4.2 mm were considered, depending on the main line diameter, as well as a depth of cover of 3, 6 and 9 m.

The study showed that the need for reinforcement increases with increasing branch diameter, with increasing depth of cover, and with decreasing thickness. In general, there are three categories (listed in order of increasing reinforcement requirements): (1) cases where no reinforcing is required, (2) cases where longitudinal reinforcement (a tension strap) is required above and below the branch, and (3) cases where both longitudinal and circumferential reinforcement is required as shown in Figure 6.19.

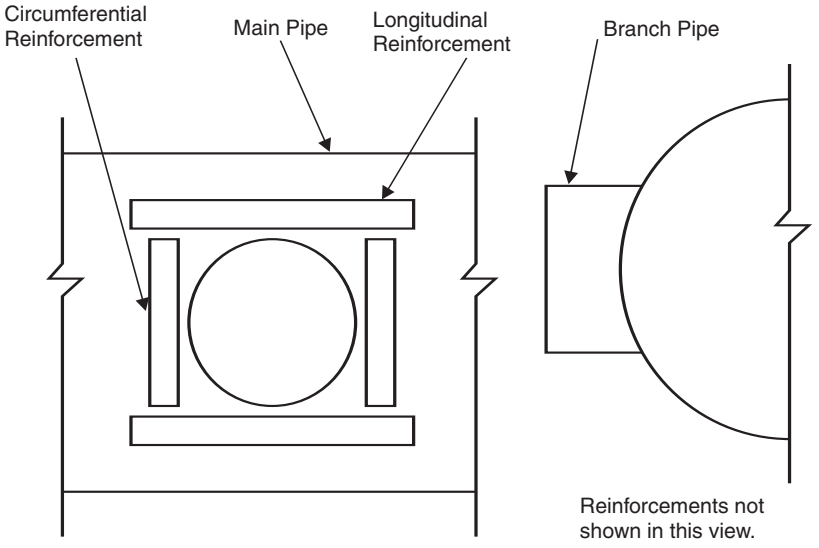

Figure 6.19 Schematic of reinforcements.

To facilitate the design of reinforcement, tables were developed to indicate when each type of reinforcement is required. Also, tables were developed that can be used to calculate the minimum cross section area that must be provided by longitudinal reinforcement when required. For circumferential reinforcement, a simple equation was developed to determine the minimum required area. Information was also presented on fastening methods for connecting the reinforcement.

As an alternative to providing longitudinal and/or circumferential reinforcement, the wall thickness of the main pipe can be increased. It is also permissible to provide a saddle plate as illustrated in Figure 6.20. Saddle plates must be of the same material and wall profile as the main pipe and must extend onto the main pipe on all sides from the branch pipe. The saddle plate must be continuously welded to a stub having the same diameter as the branch pipe. The stub must be at least 300mm long. The saddle plate must be connected to the main pipe with sufficient fasteners (welds, bolts or screws) so that there are no large gaps and so that it will act structurally with the main pipe.

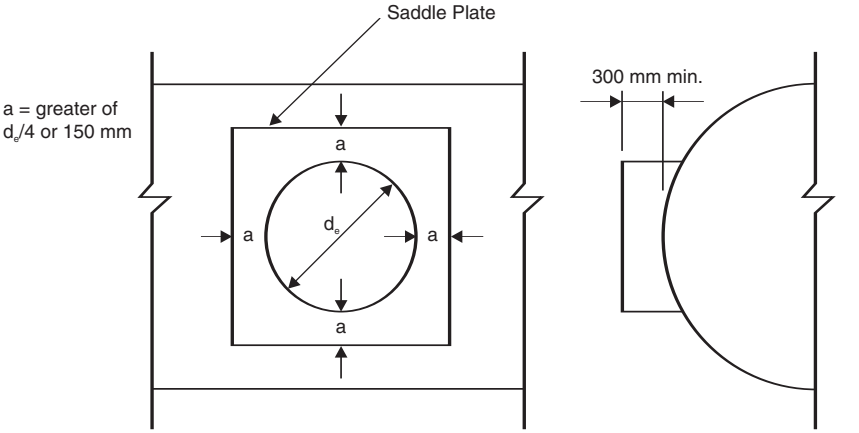

Figure 6.20 Schematic of saddle plates.

As an alternative to providing the required longitudinal reinforcement resulting from the study, it is also permissible to provide beam type reinforcement, as illustrated in Figure 6.21, designed using recognized engineering principles. The beam can be one or more channel or angle sections attached to the main pipe above and below the opening for the branch.

A report titled "NCSPA Design Data Sheet No. 18", was updated and made available in September, 1999. The NCSPA report consists of two parts. Part 1, Design of Reinforcement, includes a seven step design procedure, a design example, and the design tables. Part 2, Background and Discussion, reviews the analysis made, design assumptions, and further details.

ASTM standard A998, titled "Standard Practice for Structural Design of Reinforcements of Fittings in Factory-Made Corrugated Steel Pipe for Sewers and Other Applications", was based on the work done for the NCSPA and provides additional details and information.

Although the NCSPA report covers the most common branch connections, it does not cover all possible geometries or allow for all possible installation conditions.

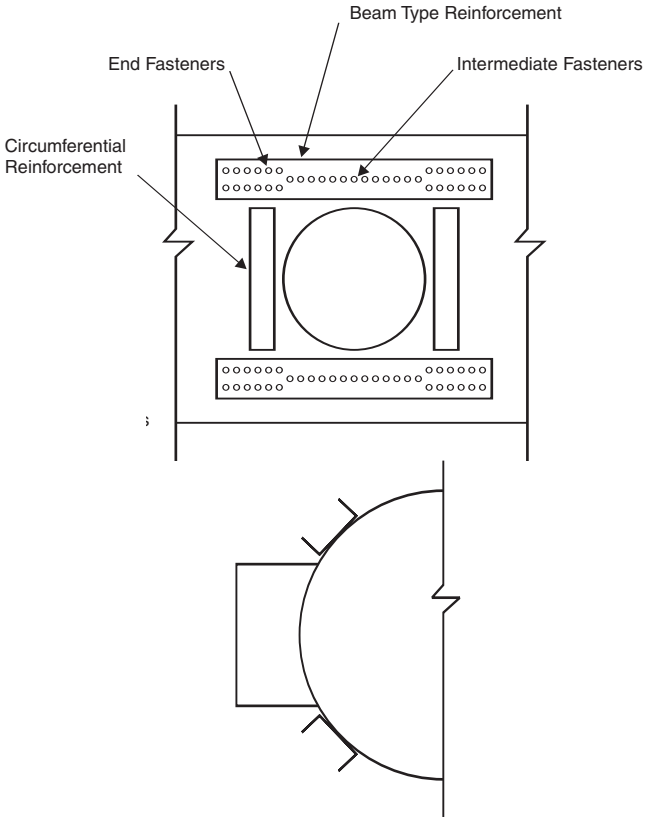

Figure 6.21

COLUMN OR END LOADS

Tests were conducted on riveted corrugated steel pipe at the University of North Carolina in 1927 and the following was determined:

1. Proper size and spacing of circumferential rivets in corrugated steel pipe used as columns.
2. Supporting strength of corrugated steel pipe used for bridge piers and caissons and for columns in general construction.
3. Maximum pressure that can be safely exerted on the end of a corrugated pipe in jacking it through an embankment, without buckling the corrugations.

Further tests were made at the University of Illinois in 1936. The results of these and the earlier tests are shown in Figure 6.22. Subsequent tests at Ohio State University in 1965 confirmed that these short column results are conservative for both annular and helically corrugated pipe. However, the results are only applicable to pipe with 13 mm deep corrugations.

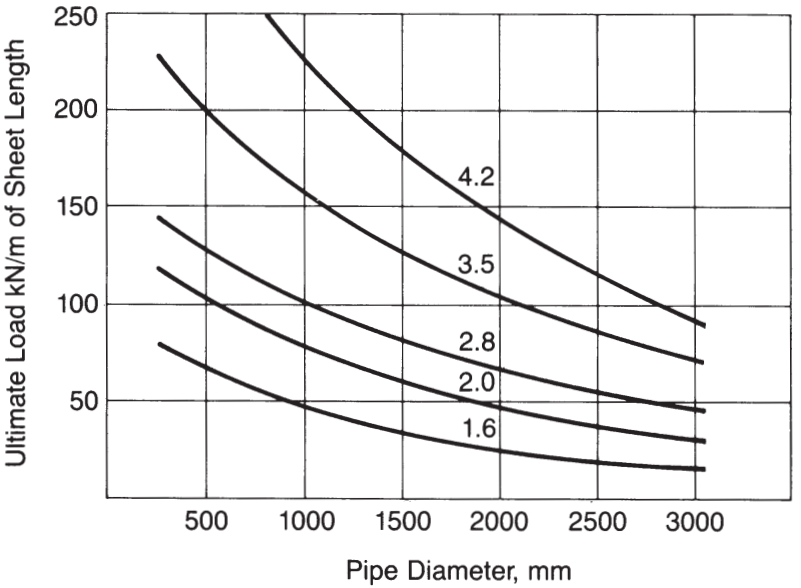

Figure 6.22 Ultimate unit compressive strength of short standard corrugated pipe columns as determined at the University of Illinois.

EXTERNAL HYDROSTATIC PRESSURE

Pipes not buried in compacted soil and which are subjected to external hydrostatic pressure must be designed for buckling as circular tubes under uniform external pressure. The variable passive soil pressure upon which the ring compression design is based, is not available in this load condition and the pipe ring itself must resist the bending moments resulting from out-of-roundness.

The "Theory of Elastic Stability" by Timoshenko and Gere details methods of analysis for thin tubes. Correlation has not been made with these buckling equations and corrugated pipe. However, a few tests have been conducted which suggest that a modified form of the equations will provide the approximate collapse pressure of corrugated steel pipe.

The Timoshenko buckling equation is:

$$P_{cr} = 3EI/[(1-\upsilon^2)R^3]$$

where: P_{cr} = critical pressure, MPa
E = modulus of elasticity of pipe wall = 200 x 10^3 MPa
I = moment of inertia of pipe wall, mm^4/mm
υ = Poisson's ratio = 0.3 for steel
R = radius of pipe, mm

To provide for slight out-of-roundness and other variations, the estimated collapse pressure, P_E, is calculated as:

$$P_E = P_{cr}/2 \text{ MPa}$$

or $P_E = 3EI/[2(1-\upsilon^2)R^3]$

For corrugated steel pipe, $P_E = 330 \times 10^3 \times I/R^3$ MPa

This equation, with suitable safety factors, is useful as a design guide. Pipe for critical applications should be tested to collapse to verify its collapse pressure.

AERIAL SPANS

Should the need arise to run sewers above ground to cross ravines or streams, CSP aerial sewers supported on bents afford an economical solution. The supports are located at pipe joints. Table 6.17 provides allowable spans for this purpose. The table provides for pipes flowing full of water, including the weight of an asphalt-coated pipe. The bending moments were calculated on the basis of a simple span and limited to a factored ultimate bending moment. Ultimate moments were determined theoretically and verified by limited testing.

Aerial span.

Table 6.17 Allowable span, in metres, for CSP flowing full

Pipe Diameter, mm	Specified Steel Thickness, mm				
	1.6	2.0	2.8	3.5	4.2
	68 x 13 mm Corrugation				
600	4.0	4.6	6.1	—	—
800	3.7	4.6	6.1	7.6	—
1000	3.7	4.6	6.1	7.6	—
1200	3.4	4.3	5.8	7.6	9.1
1400	—	4.3	5.8	7.3	8.8
1600	—	4.3	5.8	7.3	8.8
1800	—	—	5.5	7.3	8.8
2000	—	—	—	7.0	8.5
	125 x 26 & 76 x 25 mm Corrugation				
1200	2.7	3.4	4.66	—	—
1400	2.4	3.0	4.3	5.5	—
1600	2.4	3.0	4.3	5.5	—
1800	2.4	3.0	4.3	5.5	6.7
2000	2.4	3.0	4.3	5.5	6.7
2200	—	3.0	4.3	5.5	6.7
2400	—	3.0	4.3	5.5	6.7
2700	—	—	4.3	5.5	6.4
3000	—	—	—	5.2	6.4
	152 x 51 mm Corrugation				
1810	4.0	5.0	6.1	—	—
2120	3.6	5.0	6.1	6.9	8.0
3050	3.6	4.7	5.8	6.9	8.0
3670	3.6	4.7	5.8	6.9	8.0
4300	3.2	4.7	5.8	6.6	7.8
4920	3.2	4.7	5.5	6.6	7.8
5540	—	4.4	5.5	6.6	7.8
6160	—	4.4	5.5	6.4	7.5

END TREATMENT

Designing the ends of a flexible culvert requires additional considerations beyond those addressed in the ring compression design of the culvert barrel. End treatment design must also consider unbalanced soil loadings due to skews or excessive cross slopes, the residual strength of skew cut or bevel cut ends, and possible hydraulic action due to flow forces, uplift and scour.

Pipes skewed to an embankment (crossing at an angle other than 90˚) are subjected to unbalanced soil loads through and beyond the area of the fill slope. The unbalance is easily seen by imagining a section through the pipe and backfill perpendicular to the pipe's longitudinal axis. The amount of imbalance depends on the degree of skew (angle), diameter or span of the pipe, and the slope of the embankment. Unbalanced soil loads typically are not a serious consideration when skews are maintained within the limits of Figure 6.23. Where multiple runs of pipe are used, the total width of the entire run (including the space between the pipes) should be considered in lieu of the span or diameter of a single pipe.

Where skews must exceed these limits, the embankment may be shaped or warped to balance the loads and ensure side support. Figure 6.24 provides typical examples of both properly and improperly balanced embankments. Alternatively, full headwalls can be used. A headwall, designed to carry the thrust forces of the cut end of the pipe, can provide for nearly any degree of skew required.

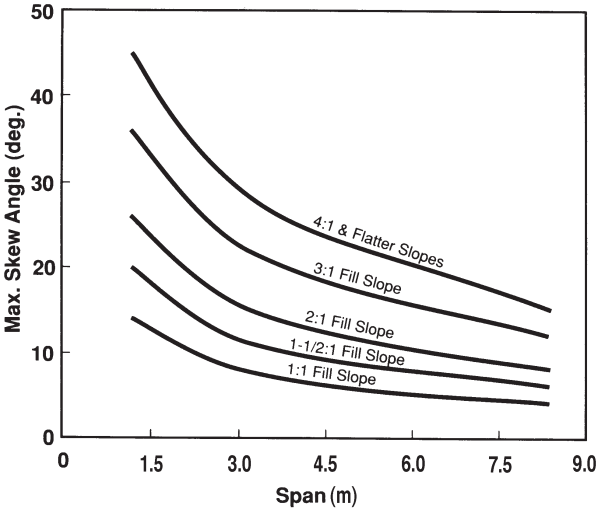

Figure 6.23 Suggested limits for skews to embankments unless the embankment is warped for support or full head walls are provided.

Square end pipes are recommended for most applications . In multiple runs, the ends must be extended so they are aligned perpendicularly as shown for "Proper Balance" in Figure 6.24. Adequate side support at the ends of multiple runs cannot be achieved if they are staggered as shown for "Improper Balance" in Figure 6.24.

Skew cut, bevel cut or skew-bevel cut ends are sometimes used for hydraulic or aesthetic reasons. When the pipe ends are cut, the compression ring is interrupted and pipe strength in the cut area is limited to the bending strength of the corrugation.

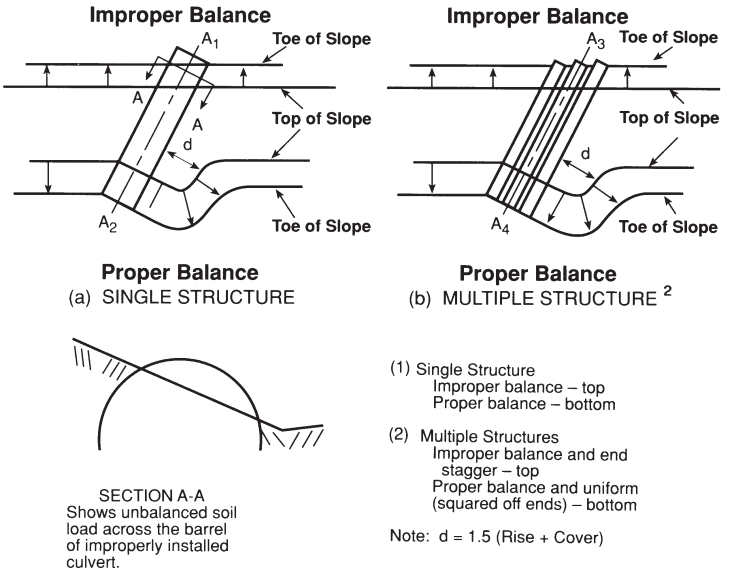

Figure 6.24 Properly and improperly balanced (warped) embankment fills for single and multiple culvert conditions.

Simple skew cut ends can accommodate soil and installation loads if they are limited to the skew angle limits of Figure 6.23. However, hydraulic flow forces must also be considered. Headwalls, concrete collars and other reinforcement can be provided as necessary.

Compacting backfill over high-profile arch.

Bevel cuts, as shown in Figure 6.25, can be done in several ways. Step bevels are recommended for all sizes of pipes. Step bevels are typically limited on long span and larger structural plate pipes, depending on the rise (height) of the structure. Full and partial bevels are typically applicable only to smaller pipes as suggested by Table 6.18. Full bevels are not recommended for multiple radius shapes such as pipe-arches and underpasses, or with bevel slopes flatter than 3:1.

All types of bevel cut ends typically require protection, especially when hydraulic flow forces are anticipated. The cut portion should be anchored to slope pavement, slope collars or headwalls at approximately 450 mm intervals. Cutoff walls or other types of toe anchorage are recommended to avoid scour or hydraulic uplift.

Skew bevel cut ends may be used where they meet the criteria for both skew and bevel cut ends.

Hydraulic forces, on inlet or outlet ends, are difficult to quantify. When structures are designed to flow full under pressure, where flow velocities are high or where flows are expected to increase abruptly, significant hydraulic forces should be anticipated. Equalizer pipes and slow flowing canal crossings for instance, do not provide the same level of concern.

Where significant hydraulic forces are anticipated, important design considerations include: support and protection of the pipe end (especially the inlet), erosion of the fill embankment, undercutting or piping of the backfill or bedding, and hydraulic uplift. Slope collars, or slope pavements with proper pipe end anchorage, can provide support for the pipe end and reduce erosion concerns. A compacted 300 mm thick clay cap over the fill slope, with proper erosion protection such as riprap, helps keep water from infiltrating and eroding the backfill. Toe or cutoff walls, placed to an adequate depth, keep flow from undermining the invert and provide anchorage for the pipe end.

Half headwalls with cut-off walls and more elaborate full headwalls not only stiffen the pipe end against damage from water energy, but also improve the efficiency of the inlet. See Figures 6.26 and 6.27.

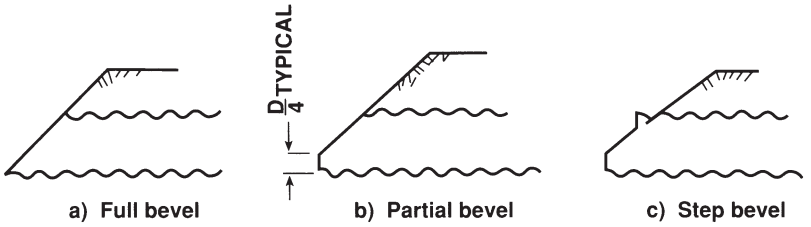

Figure 6.25 Types of beveled ends.

Table 6.18 Recommended diameter (or span) limits for full or partial bevel cut ends

Specified Thickness, mm	Corrugation Type		
	68 x 13	76 x 25 & 125 x 25	152 x 51
1.60	1220	1980	—
2.00	1370	2130	—
2.77/2.80	1520	2440	3960
3.50	1680	2740	4270
4.27/4.78	1830	2900	4570
5.54	—	—	5030
6.32	—	—	5330
7.11	—	—	5490

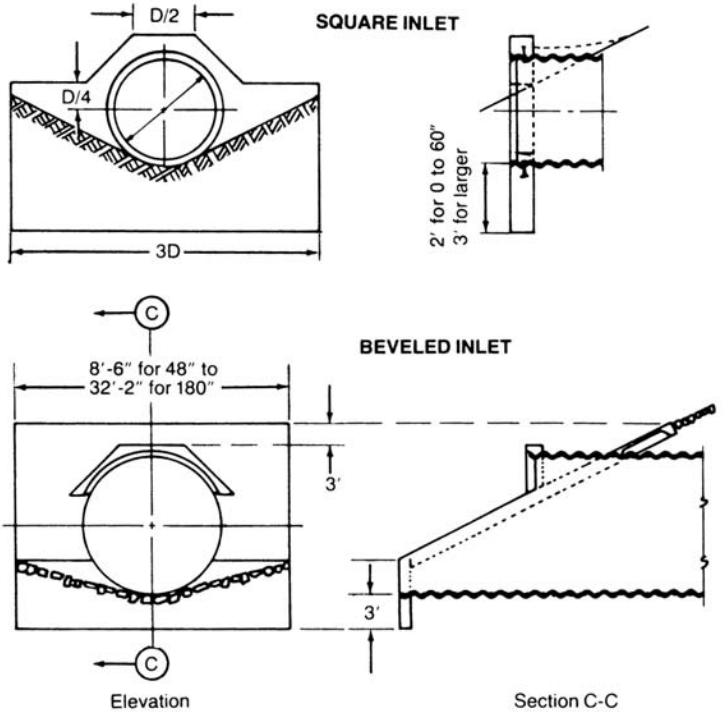

Figure 6.26 Treatment of inlet end of large corrugated steel structures as recommended by the Federal Highway Administration.

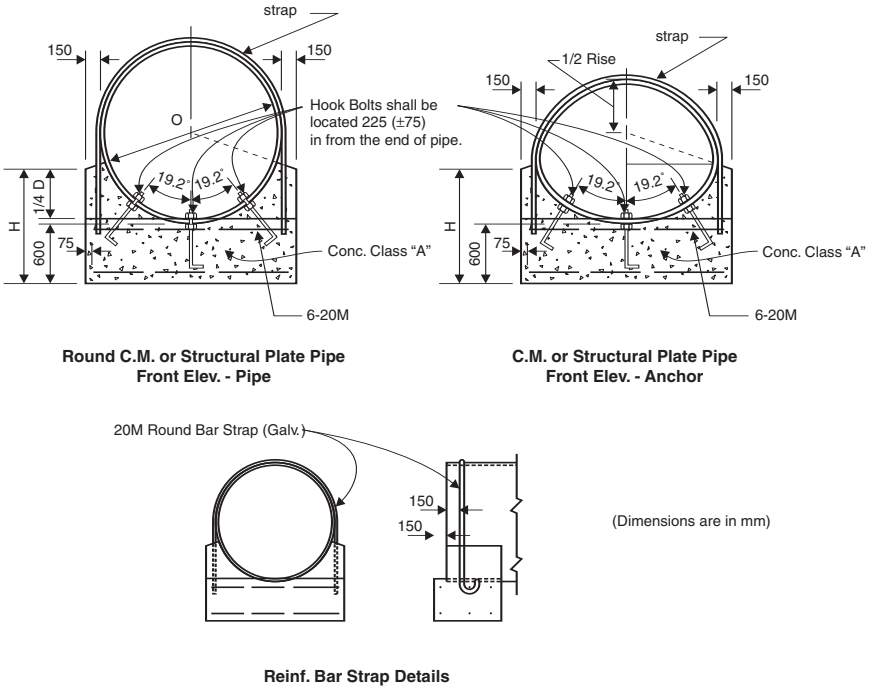

Figure 6.27 Treatment of inlet end of corrugated or structural plate corrugated steel pipe.

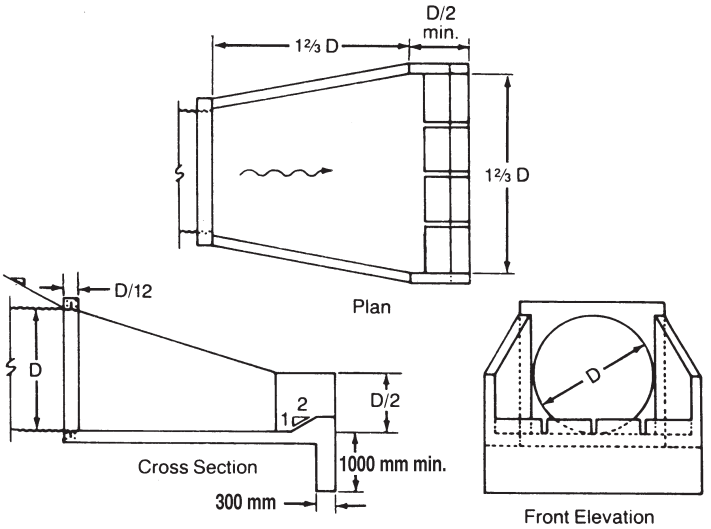

Figure 6.28 Treatment of outlet end of large corrugated steel structures.

The examples of end treatments shown in Figure 6.26, 6.27 and 6.28 perform both hydraulic and structural functions. Besides improving hydraulic flow and supporting skew or bevel cut ends, these treatments provide cut-off walls below and beside the pipe to protect the backfill and embankment slope from piping and erosion.

Temporary Bracing

The ends of structures may require temporary horizontal bracing to prevent distortion during backfill and the construction of headwalls. The end of a structure, cut on an extreme skew and/or bevel, may require support by shoring until the slope pavement or reinforcing collar is completed.

Standard Designs

Most highway and railway design offices have adequate design standards suitable for their applications and jurisdictions. Reference to these is valuable for design of headwalls, riprap protection and slope pavements. For typical end treatments recommended by the U.S. Federal Highway Administration, see Figures 6.26 and 6.28.

APPENDIX A

Utah Test Program 1967 - 1970

Extensive research on buried corrugated steel structures was sponsored by the American Iron and Steel Institute and carried out at Utah State University in Logan, Utah, under the direction of Dr. Reynold K. Watkins. The methods, results and conclusions are summarized here.

Scope

Approximately 130 pipes, 6 m long, in size ranging from 600 to 1500 mm diameter, were loaded to performance limit in low grade soil backfills compacted to between 70% and 99% standard Proctor density. Riveted, spot welded and helical pipe fabrications were included in both 68 x 13 mm and 75 x 25 mm corrugations. Confined compression tests were conducted on six different soils to correlate results to commonly used backfill materials.

Procedure

The test cell was constructed of 16 mm steel plate of elliptic cross-section (see Figure 6.29). The cell was 7.3 m long, 4.6 m wide and 5.5 m high. Steel trusses, pinned to the top of the cell walls, supported hydraulic cylinders which applied a uniform pressure of up to 960 kPa on the top of the soil.

The backfill material used was a silty sand, installed in lifts and compacted with manually operated mechanical compactors. Pipes were instrumented with several pressure gauges around the circumference to measure soil pressures on the pipe. The compactive effort and soil moisture contents were varied to obtain 70% to 99% standard Proctor densities.

After backfilling, steel plates were placed on top of the soil to improve the bearing of the hydraulic rams. Load was applied in planned increments with the following readings taken: loading force, soil pressure on the pipe, vertical deflection, and ring profile. Testing was terminated when the limit of the hydraulic rams was

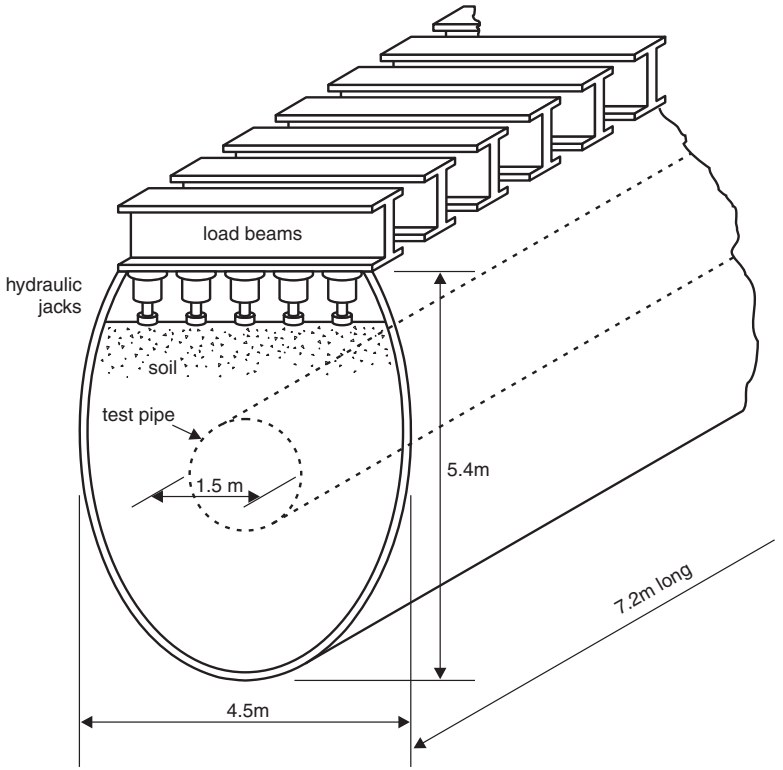

Figure 6.29 Diagramatic sketch of test cell showing method of applying load with hydraulic jacks.

reached. The pipe did not reach their full structural capacity in the test cell. Therefore, the pipes will perform under field loads much higher than those recorded in the test.

Results

Results of the test, plotted for five levels of standard Proctor backfill density, are shown in Figure 6.30. Assuming the load applied by the hydraulic rams equals the pressure acting on the pipe, the ultimate steel stresses are plotted on the previously used buckling chart (see Figure 6.6). It is immediately apparent that most of the steel stresses, calculated by this criteria, are fictitious because they greatly exceed the yield strength. This is explained by Figure 6.31, which illustrates how the applied load is actually carried. The load is carried in part by the soil arch formed in the compacted backfill. The soil arch forms as load is applied and pipe and soil strains occur. Because the stresses on the ordinate are calculated from the total load, with no reduction for the load carried by the soil in arching action, they are designated "apparent stress".

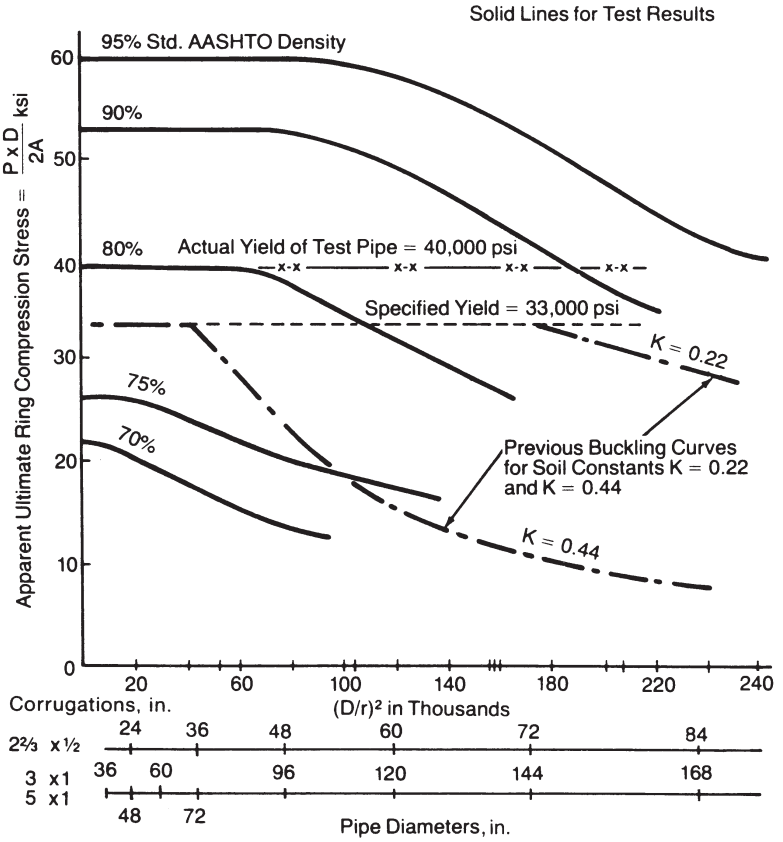

Figure 6.30 Results of Utah loading tests on corrugated steel pipe, showing apparent ultimate ring compression stress as a function of diameter and corrugations for various values of soil density determined by AASHTO.

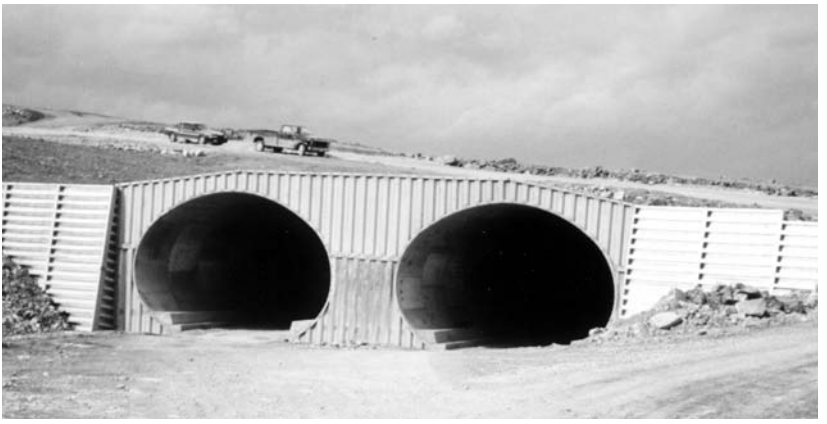

Twin high-profile arch mine underpass, with sheeting and bin-type retaining wall end treatment.

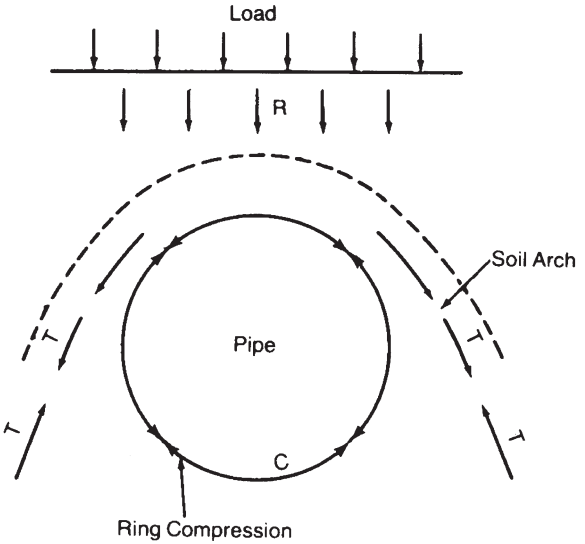

Figure 6.31 Diagram showing how load P_V is partly carried by means of soil arch over the pipe.

Discussion and Conclusions

A prime objective of the Utah program was to establish a practical correlation between backfill density and pipe-behavior.

The then-current design criteria of AISI, AASHTO, and FHWA set ultimate buckling stresses below yield for common combinations of standard corrugations, diameters, and backfill density. These criteria, however, were based on hydrostatic theory modified by model studies.

The Utah program provided, for the first time, ultimate performance data on full-scale soil-steel installations, utilizing a low-grade backfill soil and normal field methods and equipment.

The Utah research confirmed what has been observed in field installations for decades: the quality and density of backfill required to permit the pipe to carry high stress levels to or near the yield strength, is of ordinary magnitude, and is comparable to current common practices for most highway embankments. The soil moduli previously used for wall buckling and deflection criteria were correlated to an unrealistically high level of soil compaction. The test results (Figure 6.30) are plotted on the old buckling stress graph. The wide disparity between the K = 0.44 curve for 85% compaction and the actual performance results at 85% compaction is readily apparent.

Critical Density

The existence of a critical density for flexible pipes had been observed before the research established the zone of "critical density" between 70% and 80% Standard Proctor Density. Critical density is a narrow zone separating the levels of backfill compaction which will and will not prevent deflection failure of the pipe. At 70% Standard Proctor Density, the pipe will not carry stresses anywhere near the yield strength and the ultimate failure mode is a collapse or excessive deflection beyond

20 to 25%. At 80% Standard Proctor Density, there is enough soil support to preclude the deflection collapse and the pipe carries stress near the yield strength.

The test soil used in the Utah research was classified as "low grade" for pipe backfill. Specifically, it was a silty sand which bulked very easily and could be placed to a wide range of Standard Proctor Densities (something very necessary to a good test program). This soil was, quite purposely, far from an ideal material and not representative of what would be obtained in a normal installation.

A number of laboratory tests and field observations were made on a full range of construction soils. These soils showed the same relationships of soil modulus to Standard Proctor Density exhibited by the test soil.

The relationship between pipe performance and backfill properties is simplified to Standard Proctor Density. It has been shown that various other moduli, such as confined compression modulus and secant modulus, can be used for more accurate results. However, these criteria are not currently in a state of practical usefulness for the pipe designer. The backfill can be designed, specified or evaluated on the basis of percent Standard Proctor Density, regardless of soil type. The only exceptions are unstable soils, such as those which turn plastic with moisture even though they have been well compacted to 85% or more Standard Proctor Density and confined in the fill. Such soils would, of course, not be suitable for the base of a high embankment, much less for pipe backfill.

Seam Strength

The Utah research included various types of seams. Pipe seam construction had no apparent effect on the strength of the pipe. Pipe seams failed only after the pipe reached ultimate load and other modes of failure were developing.

The magnitude of compressive load on the pipe wall was 25% to over 100% greater than the ultimate strength values previously used. However, these values were from tests on uncurved and unsupported columns of corrugated sheets with a seam in the middle (a convenient method of testing, but not representative of installed characteristics). When the Ohio State University tests (made on full-scale pipe rings confined in plattens) are examined, the results are compatible with the Utah results (See Figure 6.32). The standard pipe seams tested in this program are satisfactory for ultimate performance of the pipe itself.

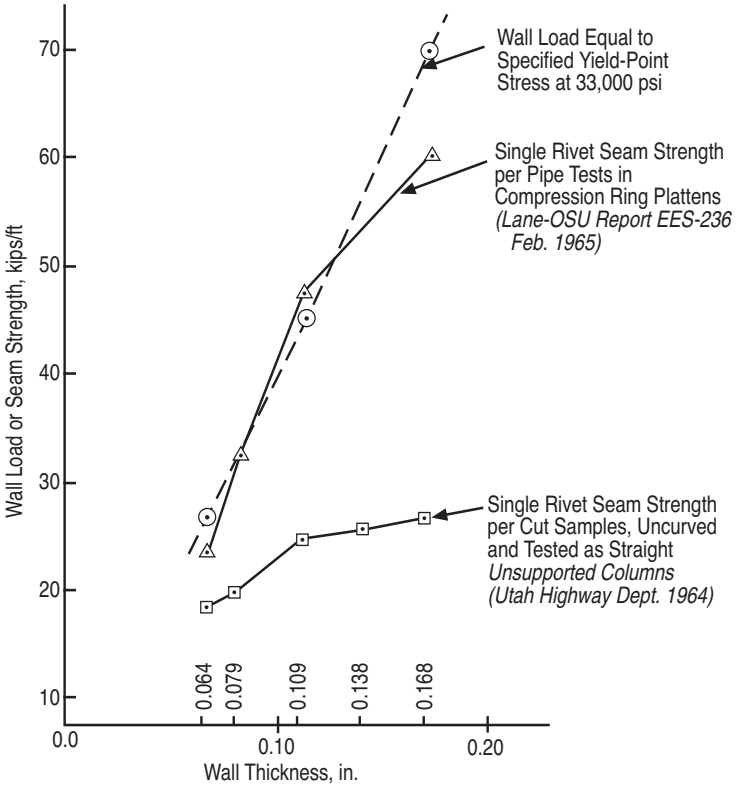

Figure 6.32 Comparison of single-riveted seams tested as straight, unsupported columns by Utah and those tested in compression ring patterns (comparable to actual service) by Ohio. Pipe seams have no apparent effect on the strength of the pipe.

BIBLIOGRAPHY

AASHTO, LRFD *Bridge Design Specifications*, American Association of State Highway and Transportation Officials, 444 N. Capitol St., N.W., Ste. 249, Washington, D.C. 20001.

AASHTO, *Standard Specifications for Highway Bridges*, American Association of State Highway and Transportation Officials, 444 N. Capitol St., N.W., Ste. 249, Washington, D.C. 20001.

Abel, J. F., Falby, W. E., Kulhawy, F. H., Selig, E. T., "Review of the Design and Construction of Long-Span, Corrugated Culverts," August 1977, Federal Highway Administration, Office of Research and Development, Washington, DC 20590.

ASTM, "Standard Practice for Structural design of Corrugated Steel Pipe, Pipe-Arches, and Arches for Storm and Sanitary Sewers and Other Buried Applications," A796/A796M, *Annual Book of Standards*, Vol. 01.06, American Society for Testing and Materials, 100 Barr Harbor Drive, PO Box C700, West Conshohocken, PA 19428-2959.

ASTM, "Standard Practice for Structural Design of Reinforcements for Fittings in Factory-Made Corrugated Steel Pipe for Sewers and Other Applications." A998,IA998M, *Annual Book of Standards,* Vol. 01.06,American Society for Testing and Materials, 100 Barr Harbor Drive, PO Box C700, West Conshohocken, PA 19428-2959.

AREMA, *Engineering Manual,* American Railway Engineering and Maintenance-of-Way Association," 8201 Corporate Drive, Ste. 1125, Landover. MD, 20785-2230.

Bacher, A. E., "Proof Testing of a Structural Plate Pipe with Varying Bedding and Backfill Parameters." Federal Highway Administration Reports in Progress, California Department of Transportation, Sacramento, CA 95805.

Bakht, Baider, "Live Load Testing of Soil-Steel Structures, SDR-80-4," August 1980. Ministry of Transportation & Communications, 1200 Wilson Avenue, Central Building Downsview, Ontario, Canada, M3M 1J8.

Bums, J.A., and Richard R.H., " Attenuation of Stresses for Buried Cylinders," *Proceedings*, Symposium on Soil-Structure Interaction, University of Arizona, Sept. 1964.

CSA, *Canadian Highway Bridge Design Code*, Canadian Standards Association - International, 178 Rexdale Boulevard, Toronto, Ontario, Canada M9W 1R3.

Demmin, J., "Field Verification of Ring Compression Design," *Highway Research Record No. 116*, Transportation Research Board, National Academy of Sciences, 2101 Constitution Avenue, Washington, DC 20418, 1966.

Duncan, J. M., "Soil-Culvert Interaction Method for Design of Culverts," *Transportation Research Record 678*, Transportation Research Board, National Academy of Sciences, 2101 Constitution Avenue, Washington, DC 20418, 1978.

FHWA, "CANDE-89 Culvert Analysis and Design Program," FHWA-RD-89-168, Federal Highway Administration, U.S. Department of Transportation, 400 7th Street SW, Washington, DC 20590,1989.

Katona, M. G., et al., "CANDE - A Modern Approach for Structural Design and Analysis of Buried Culverts," FHWA-RD-77-5, Federal Highway Administration, U.S. Department of Transportation, 400 7th Street SW, Washington, DC 20590, 1976.

Lane, W. W., "Comparative Studies on Corrugated Metal Culvert Pipes," Building Research Laboratory Report No. EES-236, Ohio State University, Columbus, OH, 1965.

Loutzenheiser, D. W.. "Pipe Culvert Inlet and Outlet Protection," FHWA Notice N 5040.3, Federal Highway Administration, U.S. Department of Transportation, 400 7th Street SW, Washington, DC 20590, 1974.

Marston, Anson, "The Theory of External Loads on Closed Conduits," Bulletin No.96, Iowa Engineering Experimental Station, Ames, IA, 1930.

Meyerhoff, G. G., and Baikie, L. D., "Strength of Steel Culverts Bearing Against Compacted Sand Backfill," *Highway Research Record No. 30,* Transportation Research Board, National Academy of Sciences, 2101 Constitution Avenue, Washington, DC 20418, 1963.

Meyerhoff, G. G., and Fisher, C.L., "Composite Design of Underground Steel Structures," *Engineering Journal*, Engineering Institute of Canada, September 1963.

Timoshenko. S. P., and Gere, J. M., *Theory of Elastic Stability,* 2nd ed., McGraw-Hill, New York., 1964.

Watkins, R. K., Ghavami, and Longhurst, G., "Minimum Cover of Buried Flexible Conduits," *Journal of the Pipeline Division*, ASCE, Vol. 94, No. PL 1, Proc. Paper 6195, October, 1968.

Watkins, R. K., and Moser, R. P., "The Structural Performance of Buried Corrugated Steel Pipes," Utah State University, Logan, Utah, 1969.

White, H.L. and Layer, J P., "The Corrugated Metal Conduit as a Compression Ring," *Proceedings,* Transportation Research Board, Vol. 39, 1960.

CHAPTER 7

INSTALLATION & CONSTRUCTION PROCEDURES

INTRODUCTION

This chapter presents information of fundamental importance regarding installation and construction procedures including base preparation, unloading and assembly, and placement and compaction of the backfill. The emphasis is on corrugated steel pipe in embankment installations such as highway culverts. For pipe in trench installation such as storm sewers, reference should be made to the CSPI publication, "Modern Sewer Design" for a thorough presentation. For additional information, reference may also be made to ASTM recommended practices under ASTM designations A 796 / A 796 M, A 798 / A 798 M, and A 807 / A 807 M.

A well situated, properly bedded, accurately assembled, and carefully backfilled galvanized steel drainage structure will function properly and efficiently over its design life. Although smaller structures may demand less care in installation than larger ones, reasonable precautions in handling, base preparation, assembly and backfilling are required for all structures.

Corrugated steel structures, because of their strength, light weight and resistance to fracture, can be installed quickly, easily and with the least expensive equipment. The flexible steel shell is designed to distribute external loads to the backfill around it. Such flexibility permits unequaled tolerance to settlement and dimensional changes that would sometimes cause failure in rigid structures. This clear advantage of corrugated steel structures is further strengthened when they are installed on a well prepared foundation, and surrounded by a well compacted backfill of stable material. Reasonable care during installation is required. Just as with drainage structures of concrete or other materials, careless installation of corrugated steel structures can undo the work of the designer.

In Chapter 6, minimum cover requirements were presented for corrugated steel pipe under highway and railway loadings. These requirements are based on years of practical experience, as well as fundamental design criteria. However, it must be emphasized that such minimum covers may not be adequate during the construction phase, because of the higher live loads that may be incurred. Therefore, when construction equipment, which produces wheel loads or gross loads greater than those for which the pipe has been designed, is to be driven over or close to the structure, it is the responsibility of the contractor to provide any additional cover needed to avoid damage to the pipe.

BASE PREPARATION

Pressure developed by the weight of the backfill and live loads is transmitted both to the side fill and the strata underlying the pipe. The supporting soil beneath the pipe, generally referred to as the foundation, must provide both longitudinal and lateral support.

The portion of the foundation in contact with the bottom of the structure is referred to as the bedding. Depending upon the size and type of structure, the bedding may either be flat or shaped.

Soft Foundation

Evaluation of the construction site may require subsurface exploration to detect undesirable foundation material, such as soft material (muck) or rock ledges. Zones of soft material give uneven support and can cause the pipe to shift and settle non-uniformly after the embankment is constructed. Thus material of poor or non-uniform bearing capacity should be removed and replaced with suitable compacted fill to provide a continuous foundation that uniformly supports the imposed pressures. The bedding may then be prepared as for normal foundations. Figure 7.1 illustrates the treatment of soft foundations.

It is important that poor foundation material be removed, for a distance on either side of the pipe, and replaced with compressed backfill. Otherwise, that material will settle under the load of the backfill alone and actually increase the load on the pipe. This is referred to as "negative soil loading.

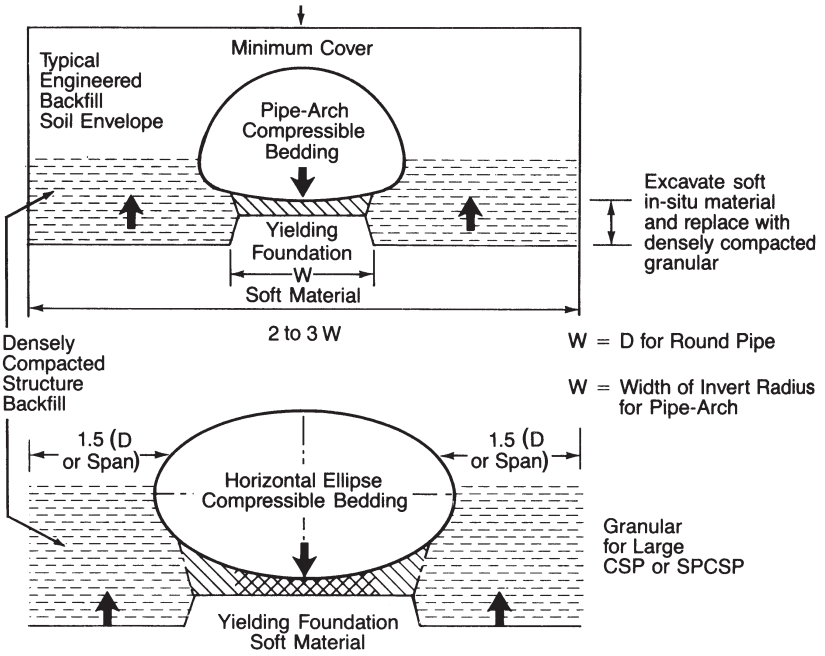

Figure 7.1 Yielding foundation treatment may be specified for larger pipe structures, and/or large invert radii. By selective excavation, it is possible to set up relative (not actual) motion (as indicated by arrows), thereby improving soil-structure interaction.

Rock Foundations

If rock ledges are encountered in the foundation, they may serve as hard points that tend to concentrate the loads on the pipe. Such load concentrations are undesirable

Backfill placement and compaction.

Stormwater detention tank installation in the City of Toronto.

since they can lead to distortion of the structure. Thus large rocks or ledges must be removed and replaced with suitable compacted fill before preparing the pipe bedding. Furthermore, when the pipe foundation makes a transition from rock to compressible soil, special care must be taken to provide for reasonably uniform longitudinal support. Figure 7.2 illustrates the treatment for rock foundations and transition zones.

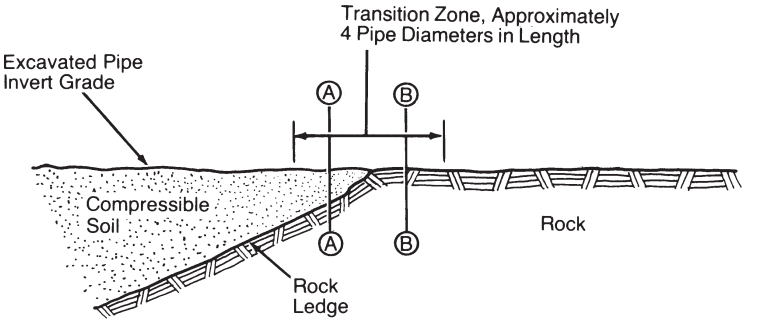

Transitions of pipe foundations from compressible soils to rock. Excavate rock and compressible soil in transition section to provide reasonably uniform longitudinal pipe support and minimum differential settlement.

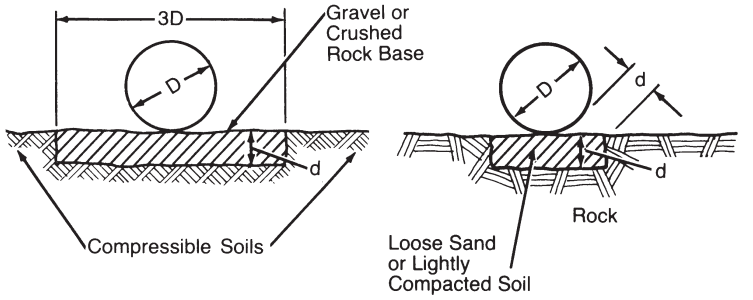

d = 4% of Fill Over Pipe; 200 mm Minimum

NOTE:
Section B-B is applicable to all continuous rock foundations.

Figure 7.2 Rock foundations and transition zones.

Normal Bedding

With flat bedding, which is usually standard for factory-made round pipe, the pipe is placed directly on the fine-graded upper portion of the foundation. Soil must then be compacted under the haunches of the structure in the first stages of backfill.

The bedding concept for pipe-arch structures also relates to large diameter and underpass shapes. For these structures, the bedding should be shaped to the approximate contour of the bottom portion of the structure. Alternatively, the bedding can be shaped to a slight V-shape. Shaping the bedding affords a more uniform support for the relatively flat structures. The shaped portion need not extend

across the entire bottom, but must be wide enough to permit the efficient compaction of the backfill under the remaining haunches of the structure.

Figure 7.3 illustrates shaped bedding for a pipe-arch. Note that the soil beside and below the corners of a pipe-arch must be of excellent quality, highly compacted, and thick enough to spread and accommodate the high reaction pressures that can develop at that location.

Whether the bedding is flat or shaped, the upper 50 to 100 mm layer should be relatively loose material so that the corrugations can seat in the bedding. The material in contact with the pipe should not contain gravel larger than 75 mm, frozen lumps, chunks of highly plastic clay, organic matter, or deleterious material.

Camber

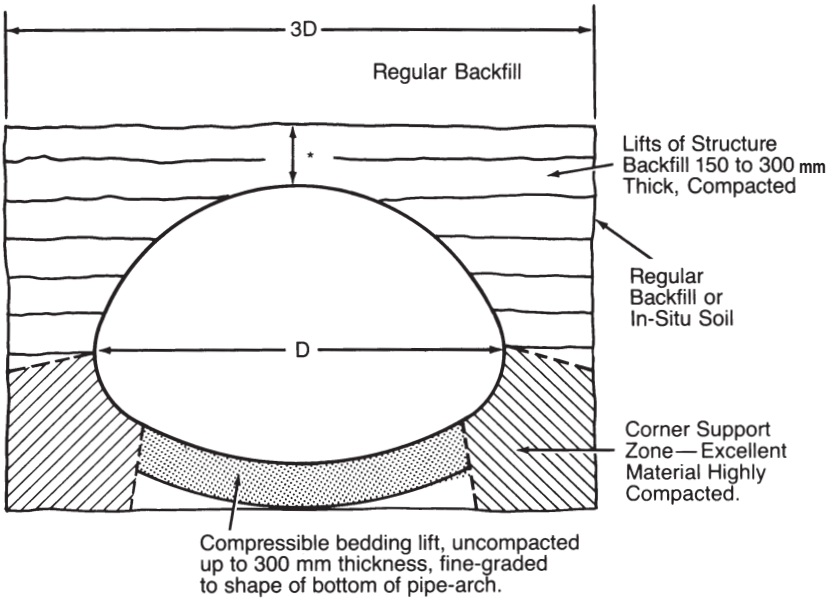

*Minimum cover of structure backfill is D/6 or 300 mm, whichever is greater.

Figure 7.3a Typical backfill envelope for pipe-arch or long span structures.

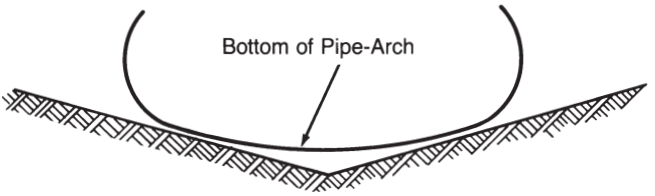

Alternate bedding detail with grade bottom graded in shallow vee.

Figure 7.3b Typical vee-shaped bedding for pipe-arches and large diameter structures.

Camber in the grade under high fills, or on a foundation that may settle, should be considered in base preparation. Camber is simply an increase in the foundation or bedding elevation at the center of a culvert above a straight line connecting its ends (the intended grade or slope of the pipe). The objective is to shape and/or elevate the grade to assure a proper flow line after settlement takes place. This forethought will prevent a sag in the middle of the culvert that might pocket water, or reduce capacity because of sedimentation. Generally, enough camber can be obtained by placing the base for the upstream half of the pipe on an almost flat grade, and the downstream half on a steeper than normal grade. The greater load at the center of the embankment, and the corresponding settlement, will result in the desired positive slope after full consolidation. Soils engineering techniques are available to predict the amount of camber required for unusual conditions. It is possible to obtain a camber equal to one-half of one percent of the length of the culvert without special fittings. For structures under high fills, the ordinates of this curve should be determined by a soils engineer. Figure 7.4 illustrates camber for a pipe under a high fill.

INSTALLATION OF CORRUGATED STEEL PIPE

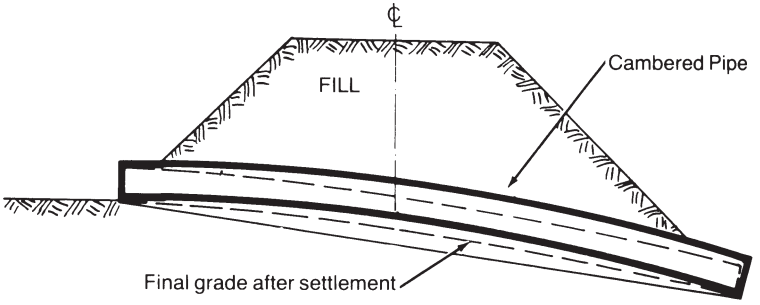

Figure 7.4 Camber allows for settlement of a culvert under high fill. Diameters 3000 mm and smaller are easier to camber, as are the lighter wall thicknesses.

AND PIPE-ARCH

Unloading and Handling

Although corrugated steel drainage structures will withstand rough handling without deformation, they should be handled with reasonable care. Pipe should never be dumped directly from a truck bed while unloading, but should be lifted or rolled to protect the galvanized surface. Polymer laminated pipe should be secured and lifted only, using fabric slings. Dragging the structures at any time may damage the coatings and jeopardize durability. Also, avoid striking rocks or hard objects when lowering pipe into trenches.

If the pipe has been ordered with lifting lugs, utilize them by using wire rope slings equipped with hooks. This simplifies installation, but rough handling should still be avoided. Since corrugated steel structures are relatively light in weight, they can be handled with simple, light equipment. If necessary, a small crew can lower pipe into trenches by means of rope slings.

Lifting CSP into place.

Assembly

The usual methods of joining two or more lengths of pipe or pipe-arch is by means of steel connection bands. The bands engage the ends of each pipe section, and are placed to overlap equally amounts of each pipe providing an integral and continuous structure.

For many years, joints for corrugated steel pipe were specified with full details and dimensions, based on traditional devices. Little thought was given to the functional requirements for joints on individual projects.

However in the early 1980s, rational structural requirements were developed for field joints in corrugated steel pipe. Extensive research towards realistic performance requirements, in terms of moment, shear, tension and degree of tightness, was conducted by California Transportation (CALTRANS).

From this, rational mechanical and structural performance requirements were developed by the Bridge Design Code Committee of the American Association of State Highway and Transportation Officials (AASHTO). These performance requirements are published in Division II, Section 26.4.2, of the current edition of the AASHTO Bridge Specifications.

CSP stream diversion fittings.

The AASHTO Specifications provide an excellent description of joint types. Joint properties include shear strength, moment strength, tensile strength, joint overlap, soil tightness and watertightness. Their recommended minimum requirements depend on whether the pipe is being installed in erodible or non-erodible soil.

The basic corrugated coupler systems in general use in Canada, as shown in Chapter 2, were tested by CALTRANS and were formed to meet all of the performance requirements. It should be emphasized that most corrugated steel pipe installations will only require a standard joint.

One-piece bands are used on smaller sizes of pipe. Two or three-piece bands are used on larger diameter pipe and when installation conditions are difficult. Rod and lug bands are used on levees, aerial sewers and similar installations where improved water-tightness is essential. Bands utilizing gaskets are commonly used in restricted leakage applications. Specially fabricated connectors can be supplied for use in jacking and for special or unusual conditions.

Bands are put into position at the end of one section of pipe with the band open to receive the next section. The second section is brought against or to within about 25 mm of the first section. After checking to see that connecting parts of both band and pipe section match, and that the interior of bands and exterior of pipe are clean, bolts are inserted and tightened.

Lifting spiral rib pipe into place.

To speed the coupling operation, especially for large diameter structures, a chain or cable-cinching tool will help tighten the band. Special clamping tools are available that fit over coupling band connectors and quickly draw the band together. Such devices permit faster hand tightening of the bolts, so that a wrench is required only for final tightening.

On large diameter structures, merely tightening the bolts will not assure a tight joint because of the friction between the band and the pipe ends. In such installations, tap the band with a mallet to cause it to move relative to the pipe as the band is tightened.

The wrench used to tighten coupling bands may be a box end wrench, but for greater speed a speed or ratchet wrench equipped with a deep socket is recommended.

Coated Pipe

On coated pipe, the surface between coupler and pipe may need lubrication with vegetable oil or a soap solution. This will allow the band to slip around the pipe more easily and to draw into place more firmly, particularly in cold weather. Lubricating and tapping the band so it can seat will assure a strong joint.

Where damage to the coating exposes the metal, repair by patching with a suitable material before the structure is backfilled.

Paved Invert Pipe

Pipe with bituminous pavement must be installed with the smooth, thick pavement in the bottom.

To simplify such placement and to speed handling, paved invert pipe lengths may be ordered with metal tabs or lugs fastened to the pipe exterior exactly opposite the location of the pavement. Slings, with hooks inserted in the lugs, automatically locate the paved invert in the bottom of the structure.

INSTALLATION OF STRUCTURAL PLATE (SPCSP) AND DEEP CORRUGATED STRUCTURAL PLATE STRUCTURES

Unloading and Handling

Plates for structural plate structures are shipped nested in bundles, complete with all plates, bolts and nuts necessary for erection. Included with the shipment are detailed erection instructions showing the order of assembly and the position of each plate. Bolts are colour coded for length identification. Bolts for every SPCSP structure are provided in two lengths. The longer length is required when three or four thicknesses of plate overlap.

Bundles are sized so that cranes, forklifts, or other construction equipment already on the job are all that is needed for unloading. Normal care in handling is required to keep the plates clean and free from damage by rough treatment.

Pre-sorting the plates as they are unloaded, on the basis of their radius and location in the structure, is important. All plates are clearly identified so that they can be easily sorted.

Lifting pre-assembled side plates into place.

Assembly of horizontal ellipse structural plate.

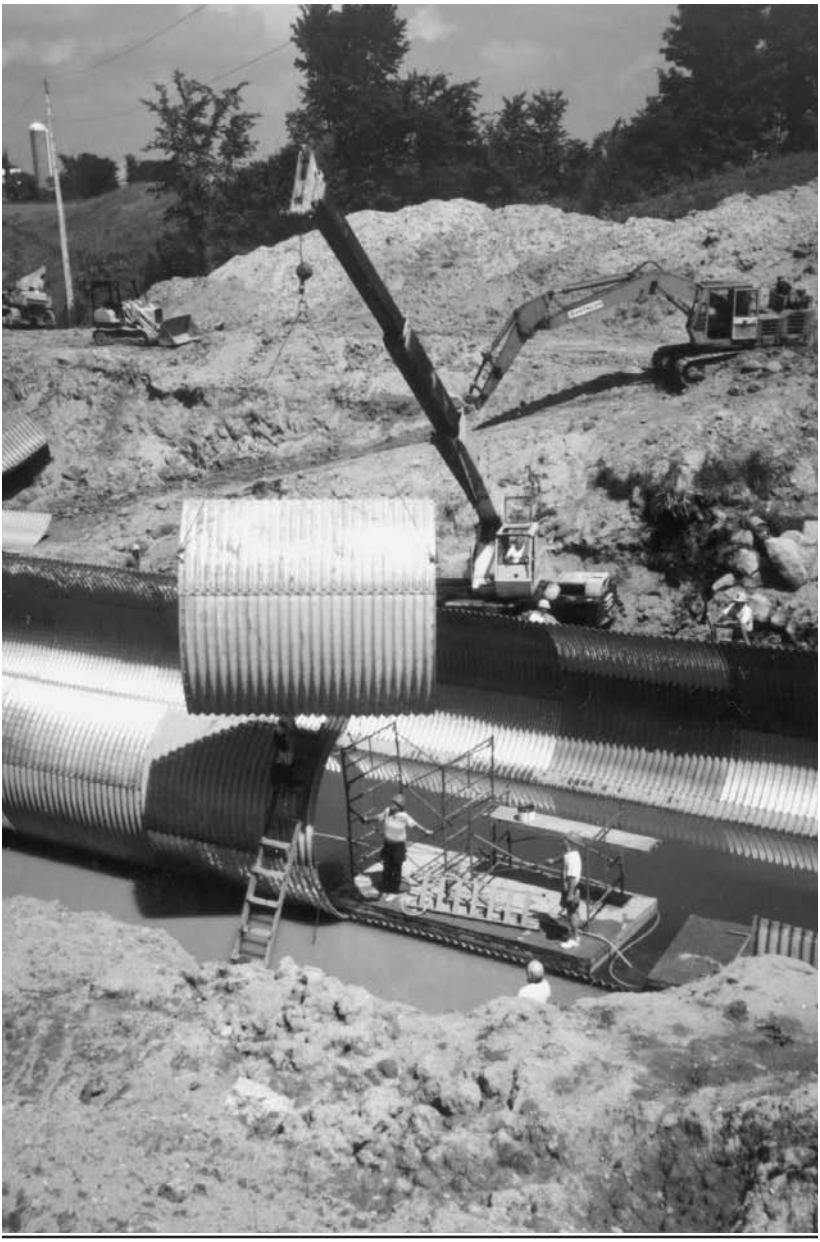

Plate assembly done from a raft.

Assembly Methods

A variety of assembly techniques are available, to suit site conditions, and/or size or shape of the structure. Maintaining the design shape must be a key objective during plate assembly.

There are four basic methods by which structural plate structures can be assembled:

1) *Plate-by-Plate Assembly* - The majority of SPCSP structures are assembled directly on the prepared bedding in a single plate-by-plate erection sequence, commencing with the invert, then the sides, and finally, the top. This method is suitable for any size of SPCSP structure.

   Initially, structures should be assembled with as few bolts as possible. The curved surface of the nut is always placed against the plate. Three or four untightened bolts near the center of each plate, along longitudinal and circumferential seams, are sufficient. This procedure gives maximum flexibility until all plates are fitted into place.

   After part of the structure has been assembled into shape by partial bolting, the remaining bolts can be inserted and hand tightened. Always work from the center of a seam toward the plate corner. Alignment of bolt holes is easiest when bolts are loose.

   After all the bolts are in place, tighten the nuts progressively and uniformly, starting at one end of the structure. The operation should be repeated to be sure all bolts are tight.

   If the plates are well aligned, the torque applied with a power wrench need not be excessive. A good fit of the plates is preferable to the use of high torque. Bolts should not be overtightened. The bolts should be torqued to a minimum of 200 N.m and a maximum of 340 N.m.

   It is important that the initial torquing be done properly. In many structures, nuts may be on the outside, and retorquing would not be possible after backfill.

   In some applications, such as for pedestrian and animal underpasses, it is specified that all bolt heads should be on the inside of the structure, for safety and visual uniformity. If a paved or gravelled invert is to be placed, it may be allowable to have the bolt ends protruding into the area to be covered.

   After backfilling, the structure relaxes and the actual in-service bolt torque will decrease slightly. Depending on plate and structure movements, some bolts may tighten, and some may loosen or vary over time. The degree of change in torque values is a function of metal thickness, plate match, and change of structure shape during backfilling. This is normal and not a cause for concern, should checks be made at a later stage.

2) *Component Sub-Assembly* - This is the pre-assembly of components of a ring, away from the bedding. The components are usually comprised of the bottom plates, the side plates and the crown plates. This method is suitable for most soil-steel bridge installations. Component sub-assembly is often more efficient than the plate-by-plate method. Its main advantage is that it permits simultaneous progress at two different locations at the structure site. The foundation preparation and bedding operation can be carried out at the same time as the sub-assembly operation.

   A step-by-step erection sequence using this technique is illustrated in the sketches in Figure 7.5. Two different types of mobile crane equipment are shown to indicate that either one would be satisfactory.

   Placing the invert components on prepared shaped bedding poses a problem with bolt insertion and torquing for large radius inverts (i.e. pipe-arch or horizontal ellipse in particular). Bolts can be preplaced by the use of spring clips. Other methods, such as the use of magnets or access trenches, may be used.

Experienced assemblers often place and tighten the bolts prior to bottom plate placement, as long as this does not affect the placement of side and top plates.

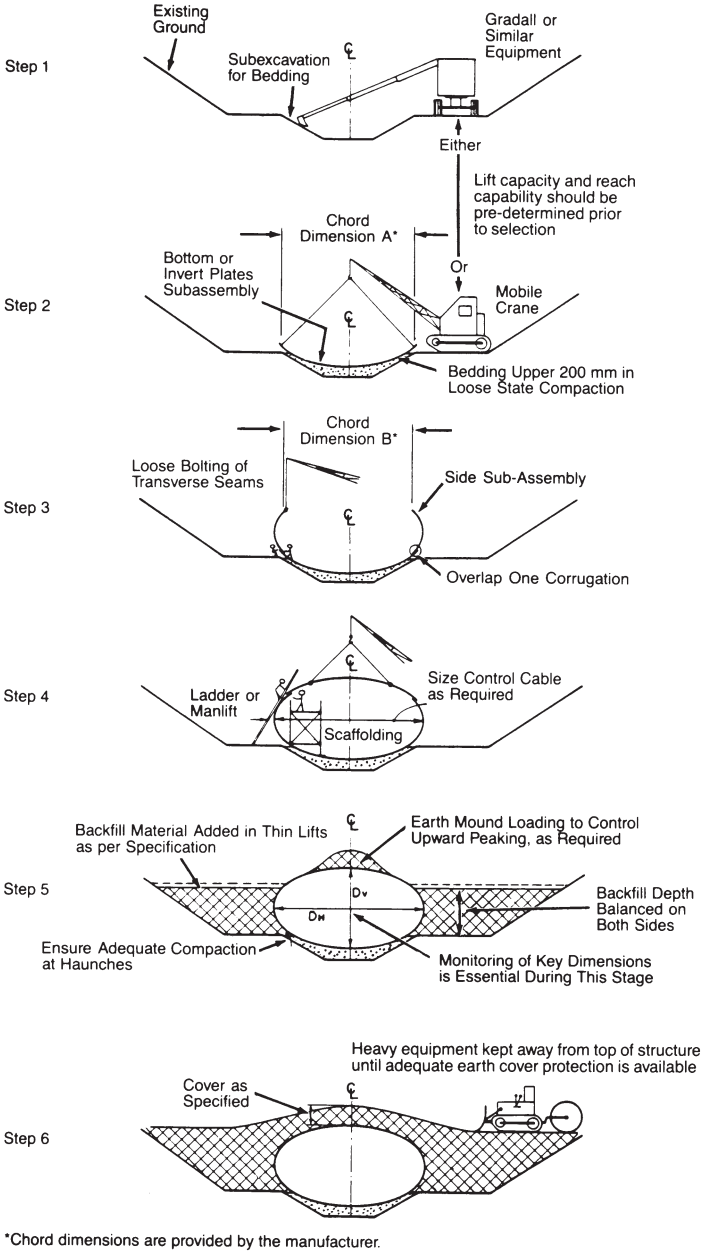

Figure 7.5 Typical component sub-assembly erection sequence for soil-steel structures: Step 1 - excavation for bedding; Step 2 - bedding and bottom sub-assembly (lift capacity and reach capability should be determined prior to equipment selection); Step 3 - erection of side sub-assembly; Step 4 - closure with top sub-assembly; Step 5 - back-filling and deformation control; Step 6 - completion of engineered backfill.

During component assembly of larger SPCSP structures, it is important to maintain curvature against the flattening due to torquing and self weight of the plate sections. The invert component should be sized to the proper radius and chord length, (Figure 7.5, Step 2) before the side assemblies are started. This can be controlled by horizontal sizing cables. As the side components are bolted in place, these cables should be moved to the springline. Similarly, the sides should be held to the design shape, to effect top closure (Figure 7.5, Step 3). When design shape is maintained during erection, the top sub-assembly should literally drop into place.

The sizing cables should be left in place until all the bolts are torqued and the cables slacken as a result of backfilling. It is important that design shape and size be maintained throughout the backfill operation, with allowances for normal movement arising from backfill pressures. On large soil-steel structures, all struts or supports, if used, should be removed when the backfill reaches the 2 and 10 o'clock positions.

The bolts in plate assembly components are all fully tightened prior to placement. This means that loose-bolting until the full ring is completed, is not possible. Therefore, it becomes much more important that exact design shape be maintained during erection, and that the component bolting be carefully aligned before torquing.

Shape checks should be carried out during and after erection to be certain that the erected shape is within design tolerances. If not, the necessary corrections must be carried out as before or backfill proceeds.

Additional bolt tightening may be required on large structures. Corner bolts control position, and the balance of the nuts are torqued to mid-range (approx. 270 N.m). Once the structure is completed, and correct alignment of plates is assured, another pass may be made to fully torque to not more than 340 N.m, before the next ring assembly is completed.

Cabling for shape control of horizontal ellipse long-span.

3) *Pre-Assembly of Rings* - In this method, circumferential rings of round structures are assembled off-site. These rings, or cans, are then transported to the assembly site for connection along their circumferential seams. A special technique is used to lap the end corrugations of one ring with those of its adjoining ring, to provide continuity in the assembly.

4) *Complete Pre-Assembly* - Pre-assembly of the complete structure can be done either at the factory or at the jobsite. The factory pre-assembled method is used for relatively small span installations; this application being limited by shipping size. The field pre-assembly method is selected for structures to be lifted intact or to be skidded onto a prepared foundation and bedding. Pre-assembly techniques are essential for installation under submerged bedding conditions.

Special Considerations For Structural Plate Arches

Structural plate arch shapes differ from other plate structures, since the edges of the arch are erected on an abutment, or footing. The arch footings are usually constructed of poured-in-place concrete, but may also be timber sills or steel plates. The use of piling is not recommended, as this will introduce an unyielding foundation. If the entire soil-steel arch structure is allowed to settle with the foundation, this will relieve load on the arch, and encourage positive soil arching and interaction.

The unbalanced steel channel on which the bottom plates rest must be located accurately to line, grade and span, as per the design drawings, to ensure proper and easy plate assembly. Care must be taken to insure that the pre-punched holes in the two opposing channels are in accurate alignment. The installer must remember to cast the unbalanced channel at the correct angle or slope to accommodate the bottom plates. Improper placement of base channels can create serious problems in arch construction.

The layout for channel installation should be shown on the fabricator's plate assembly drawings. If accurate structure overall length is important, as it may be in pre-locating concrete headwalls, the designer should remember that the actual overall length is the net length plus 100 mm, due to the lips at the end of the end plates. Pre-locating headwalls is not recommended practice, due to the flexible nature of these structures and due to manufacturing tolerances.

Scaffolding or temporary support of the early rings is usually necessary with the arch shape, as the initial plates are not self-supporting. Component pre-assembly is often advantageous.

Special Considerations For Structural Plate Pipe-Arches

During the assembly of multiple radius structures such as pipe-arches, care must be taken to ensure proper assembly and plate laps. Where different radius plates meet at a longitudinal seam, it may take extra effort to fully seat the corrugations and obtain the tangent plate lap required. A properly shaped bedding is especially important to assembly.

Pipe-arches are currently fabricated in two forms. Some have multiple radius corner plates that include both corner and top radius elements. Others use separate corner and top plates with a longitudinal seam at this juncture. The plate lap arrangement differs with this type of fabrication. The manufacturer's assembly instructions should be followed to avoid improper plate laps.

Asphalt Coating - Shop or Field

Where structural plates require a protective coating in addition to galvanizing, there are suitable materials available for applying to the components, to the assembled structure in the field, or on pre-assembled structures in the plant. Plates must be clean and dry. The coating can be an asphalt mastic containing mineral fillers and stabilizers sprayed on under high pressure to a minimum thickness of 1270 µm. (AASHTO M-243 / ASTM A849).

Seam Sealants

Improved watertightness of SPCSP structures is possible with modern seam sealants. Standard SPCSP structures, because of the bolted construction, are not intended to be watertight.

On occasion, where a degree of watertightness is required, it is practical to insert a seam sealant tape within the bolted seams. The seam sealant normally specified is wide enough to cover all rows of holes in plate laps, and of the proper thickness and consistency to effectively fill all voids in plate laps.

The procedure for installing sealant is as follows. The tape is rolled over all seams and worked into the corrugations. The tape should not be stretched. Any paper backing must be removed prior to placing the lapping plates. At all points where three plates intersect, an additional thickness of tape should be placed for a short distance, to fill the void caused by the transverse seam overlap. A hot spud or a sharp tool dipped in machine oil is used to punch through the tape, to provide a hole for inserting the bolts. At least two tightenings of the bolts are usually necessary to achieve the required torque.

Sub-Drainage

The use of CSP sub-drainage, to insure positive groundwater control in the structural backfill, is recommended practice for all medium and large span underground structures. Care must be exercised to ensure the sub-drains do not act as culverts, or cross drains, with the potential for piping or other loss of backfill. The use of geotexile filter fabrics, as a pipe wrapping for sub-drains, should be considered.

Backfilling stormwater detention system.

PLACEMENT AND COMPACTION OF BACKFILL

Selection of Structural Backfill

For the roadway conduit to support the pavement or track above it adequately and uniformly, a stable composite structure is vital. Stability in a soil-steel structure interaction system requires not only adequate design of the structure barrel, but also a well-engineered backfill. Performance of the flexible conduit in retaining its shape and structural integrity depends greatly on the selection, placement and compaction of the envelope of earth surrounding the structure which distributes its pressures to the abutting soil masses.

Requirements for selecting and placing backfill material around or near the conduit are similar, in some respects, to those for a roadway embankment. However, a difference in requirements arises because the conduit may generate more lateral pressure than would the earth within the embankment if no structure existed. Therefore, the soil adjacent to the conduit must be compacted densely.

The structure backfill is usually considered to extend one diameter on either side of the structure, and from the invert to an elevation over the pipe of 300 mm or one sixth the diameter, whichever is greater. Trench construction requires less in width, as long as the trench wall is competent. Foundation and bedding may also be included in the structure, or engineered backfill.

Soil Design for CSP

All highway and railroad engineering departments have adequately detailed specifications for selecting and placing material in embankments. These specifications provide for wide variations in terrain and for available local materials, and so they can generally apply to backfill material around conduits for normal installations. If abnormal conditions exist at a specific site or if unusual performance is expected of a conduit and embankment, a soils engineer should be consulted for designing the backfill.

Backfill material should preferably be granular to provide good structural performance. Bank, pit run gravel, or coarse sands are usually quite satisfactory. Cohesive-type material may be used if careful attention is given to its compaction at optimum moisture content. If used, geotechnical advice is recommended. Very fine granular material may infiltrate into the structure and should be avoided when a high ground water table is anticipated. A coarse granular filter layer, or a plastic cover, may be placed between fine soil and the pipe. If infiltration is desirable, to lower the ground water table, geotextiles may be used to provide the necessary filtration function.

Soil Design for Soil-Steel Structures

Granular-type soils should be used as structural backfill (the soil envelope next to the metal structure). The order of preference of acceptable structure backfill materials is as follows:

1) Well-graded sand and gravel; sharp, rough, or angular if possible.
2) Uniform sand or gravel.
3) Mixed soils (not recommended for large structures).
4) Approved stabilized soil.

The structure backfill material should conform to one of the soil classifications from AASHTO Specification M-145. For heights of cover less than 3400 mm, A-1,

A-3, A-2-4 and A-2-5 are recommended. For heights of cover of 3400 mm or more, A-1 and A-3 are suggested.

The extent of the structure backfill zone is a function of the pressures involved and the quality of the foundation soils, the trench wall or embankment soil, and the fill over the structure. Figure 7.6 shows a typical backfill envelope.

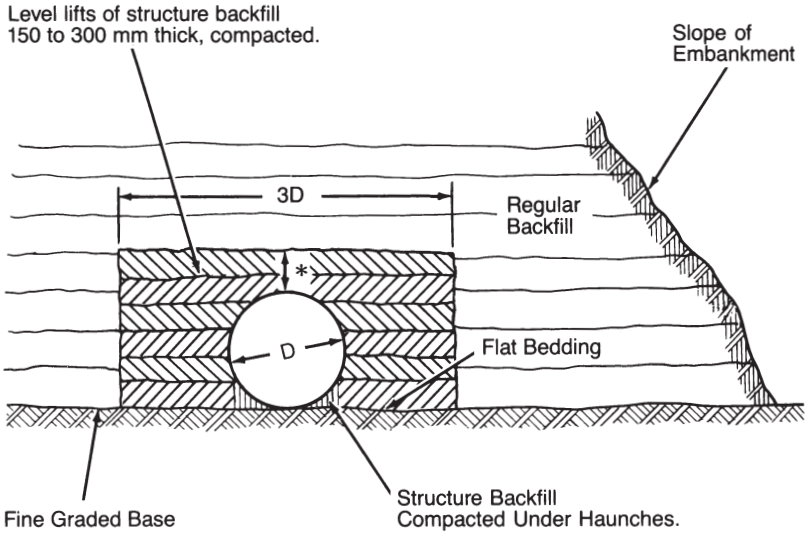

* Minimum cover of structure backfill is D/6 or 300 mm, whichever is greater.

Figure 7.6 Typical backfill envelope for round pipe installed on flat bedding, in an embankment condition.

Compaction Density

Experience and research have shown the critical density of backfill to be below 85% Standard Proctor Density. Backfill must be compacted to a greater density than critical to assure good performance. Backfill for all structures should be compacted to a specified Standard Proctor Density of 95% minimum.

Compaction Equipment

1. Hand Equipment

For compaction under the haunches of a structure, a pole or 50 x 100 mm (2 by 4) timber is generally needed to work in the smaller areas. Hand tampers for compacting horizontal layers should weigh not less than 9 kg and have a tamping face not larger than 150 x 150 mm. Ordinary sidewalk tampers are generally too light.

2. Mechanical Compactors

Most types of power tampers are satisfactory and can be used in all but the most confined areas. However, they must be used carefully and completely over the entire area of each layer to obtain the desired compaction. Care should be exercised to avoid striking the structure with power tamping tools.

3. Rollers

Where space permits, sheepsfoot, rubber-tired and other types of tamping rollers can be used to compact backfill around the structure. If rollers are used, fill adjacent to the structure should be tamped with hand-held power equipment. Be sure to keep the rollers from hitting the structure. Generally, smooth rollers are not satisfactory for compacting fills.

4. Vibrating Compactors

Vibrating equipment is excellent for compaction of granular backfills, but generally is unsatisfactory for clay or other plastic soils.

Placing Backfill Around Structure

Fill material under haunches and around the structure should be placed in layers 150 to 300 mm thick to permit thorough compaction. The fill is placed on both sides of the structure at the same time, or alternating from one side of the structure to the other side, to keep it close to the same elevation on both sides of the structure at all times. Figures 7.3 and 7.7 show how pipe-arch and round pipe structures should be backfilled. Pipe-arches require that the backfill at the corners (sides) be of the best material, and be especially well compacted.

Compaction can be done with hand or mechanical equipment, tamping rollers, or vibrating compactors, depending upon field conditions. More important than the method is that it be done carefully to ensure a uniformly compacted backfill.

Mechanical soil compaction of layers is preferred. However, when acceptable end results can be achieved with water consolidation, such as by jetting, it may be used. When water methods are used, care must be taken to prevent structure flotation or material freezing. It should be used only on free draining backfill material.

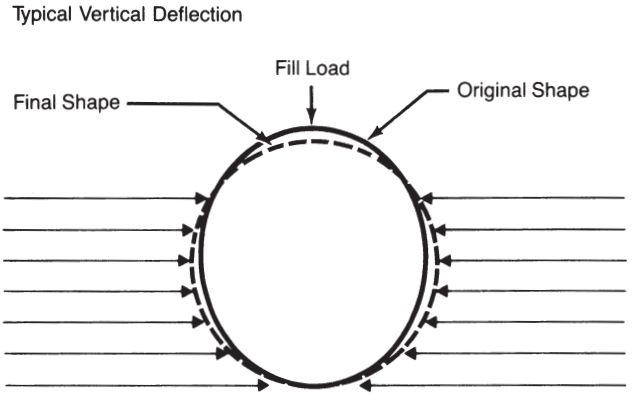

Figure 7.7 Corrugated steel pipe functions structurally as a flexible ring which is supported by and interacts with the compacted surrounding soil. The soil constructed around the pipe is thus an integral part of the structural system. Therefore it is important to insure that the soil structure or backfill is made up of acceptable material and that it is well-constructed.

Lifting spiral rib pipe into place.

Steps in Backfill Operation

Backfilling and compacting under the haunches are important steps in the backfill sequence. The material under the haunches must be in firm and intimate contact with the entire bottom surface of the structure. The area under the pipe haunches are more difficult to fill and compact and may not receive adequate attention. Care must be taken to assure that voids and soft spots do not occur under the haunches. Manual placing and compaction must be used to build up the backfill in this area.

Windrow backfill material on each side of the structure and place under haunches by shovel. Compact firmly by hand with 50 x 100 mm (2 by 4) tampers, or suitable power compactors (Figures 7.8 and 7.9).

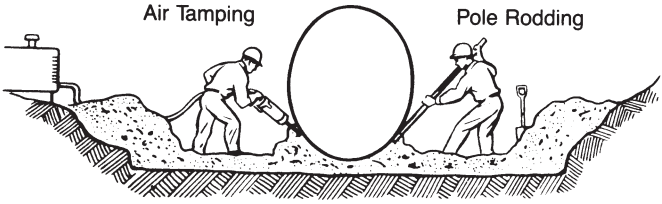

Figure 7.8 Backfill under the haunches should be placed and compacted by the most economical methods available, consistent with providing uniform compaction without soft spots.

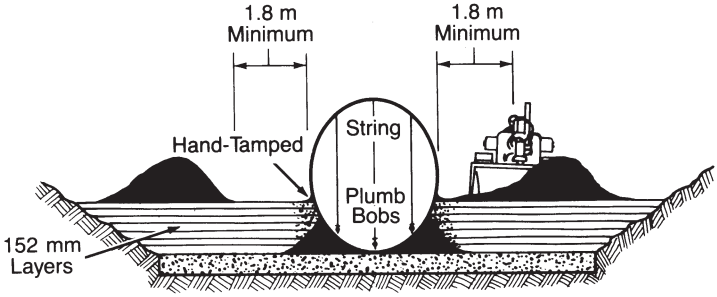

Figure 7.9 Backfilling with plumb bob monitoring.

Continue placing backfill equally on each side, in uncompacted layers from 150 to 300 mm in depth, depending on the type of material and compaction equipment or methods used. Each layer must be compacted to the specified density before adding the next. Generally, no more than a one layer difference in elevation on each side should be allowed. These compacted layers must extend at least one-half to one diameter on each side of the structure or to the side of the trench or natural ground line.

Backfill in the corrugation valleys and the area immediately next to the pipe should be compacted by hand-operated methods. Heavy compaction equipment may approach as close as 1000 mm. Any change in dimension or plumb of the structure warns that heavy machines must work further away.

Structural backfill material should be compactible soil or granular fill material. Structural backfill may be excavated native material, when suitable. Select materials (not larger than 75 mm), with excellent structural characteristics, are preferred. Desired end results can be obtained with such material with a minimum of effort over a wide range of moisture contents, lift thicknesses, and compaction equipment.

To ensure that no pockets of uncompacted backfill are left next to the structure and to minimize the impact of the material placement and compaction methods on the structure, it is necessary to follow a simple rule; all equipment runs parallel to the length of the pipe (Figure 7.10) until such time as the elevation of the backfill reaches a point that is at 3/4 of the rise of the structure.

Figure 7.11 illustrates poor practices. The possibility of uncompacted fill, or voids next to the structure are bound to arise with equipment operating at right angles to the structure. Mounding and dumping of backfill material against the structure will also impact the installation.

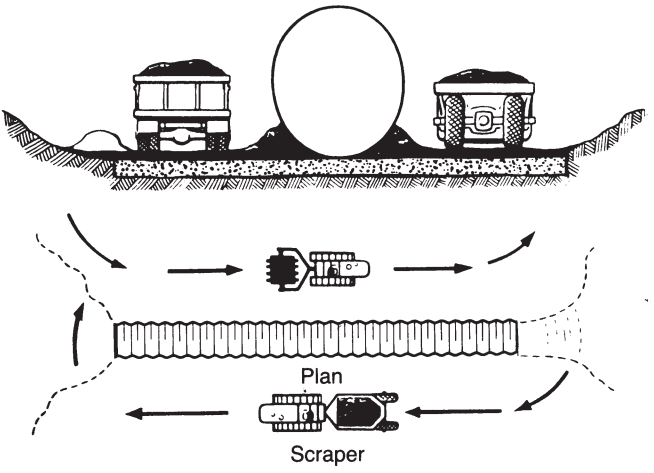

Figure 7.10 Good backfilling practice.

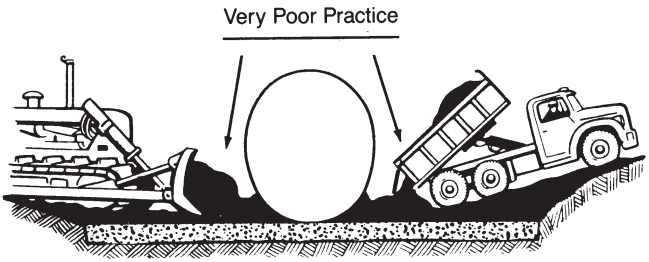

Figure 7.11 Poor backfilling practice.

Adding water to bring backfill to optimum moisture content

Backfill compaction adjacent to long span structural plate.

A balanced sequence of backfilling on either side is recommended:

- dump trucks or scrapers windrow granular backfill one-half to one span away (depending on size of structure and site) on either side;
- graders or dozers spread in shallow lifts for compaction;
- pedestrian-type compactors are used for close work, while heavier self-propelled vibratory drum compactors are used away from the structure and for the rest of the soil envelope once minimum cover is achieved;
- supervision of material placement and compaction methods and inspection of pipe shape provide invaluable feedback;
- hand work, or very light equipment, is used over the top of the structure until minimum cover is achieved.

In order to provide proper drainage of the backfill above the springline, it is desirable to grade or slope the fill slightly toward the ends of the structure (with no headwalls). This also facilitates fill over the crown, or locking-in the structure. Conversely, if headwalls have been built prior to backfilling, work should proceed from the ends towards the middle (Figure 7.12).

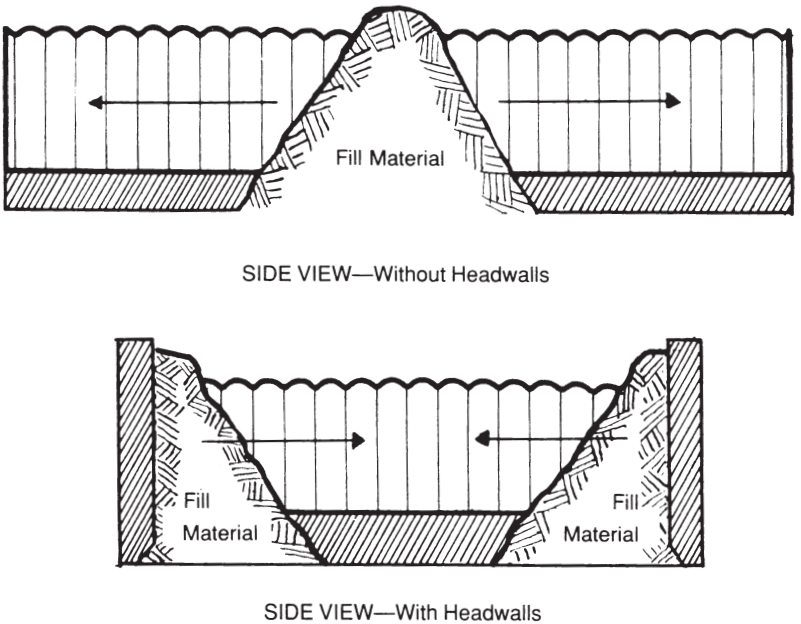

Figure 7.12 Recommended backfilling direction depending on presence of end walls.

The headwall first approach, although not recommended, may be useful where it is desirable to divert the stream through the structure and/or to give cut and fill access from both sides at an early stage. Care must be exercised to provide for surface runoff, to prevent ponding or saturation of the backfill from rainfall or snowmelt.

Backfill compaction over long span proceeds in a direction perpendicular to the length of the structure.

Shape Control

Shape control refers to controlling the symmetry of the structure during backfill, by control of the backfill operation.

Two movements may occur during backfill - "peaking", caused by the pressure of the compacting sidefills, and "rolling", caused by unbalanced fill or greater compaction on one side (Figure 7.13).

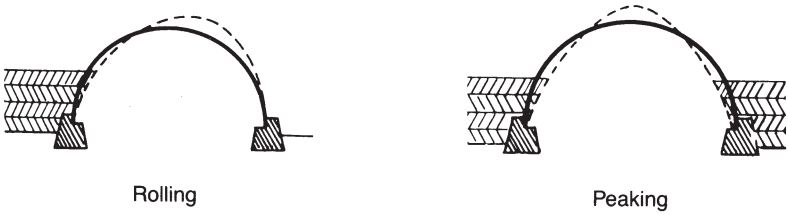

Figure 7.13 Rolling and peaking.

As a general rule, deflection in any direction, measuring greater than 2% from original shape, should not be allowed during the backfill operation.

The plumb-bob method of deflection monitoring (Figure 7.9) is convenient and effective. Suspend plumb-bobs, prior to backfilling, from the shoulder (2 and 10 o'clock) positions so that the points of the bobs are a specific distance from a marked point on the invert.

Peaking action can be detected when the points of the bobs move upwards. Corrective action is to keep equipment further away from the structure and/or to be cautious above compaction effort. It is unlikely that peaking will become severe, except for structures with long radius sides (i.e. vertical ellipses, medium and high profile arches, and pear-shapes).

Rolling action can be detected when the bobs move laterally. It is corrected by filling or compacting on the side towards which the bob has moved. For example, a roll to the right will be corrected by placing a higher fill on the right.

Careful monitoring of the plumb-bobs and prompt remedial steps prevent peaking or rolling action from distorting the structure.

If distortion greater than the recommended occurs, backfill should be removed and replaced. The steel structure will usually return to erected shape, unless distortion has been excessive.

Shop-cut bevel and skew ends act as cantilever retaining walls, and may not be able to resist the lateral pressures caused by heavy equipment and vigorous compaction. Temporary horizontal bracing should installed across beveled or skewed ends before backfill commences, if heavy equipment is to be used close to the cut ends. Alternatively, heavy equipment should be kept away from the cut ends of the pipe.

Vertical Deflection

The sides of a flexible structure will naturally push outward, compacting the side fills and mobilizing their passive resistance. As the sides go outward, the top moves downward (Figure 7.7).

This downward vertical deflection is normal. With reasonable backfill practice, any flexible underground structure can be expected to deflect vertically. With excellent practice, the deflection is usually less than 2% of the rise dimension.

If the sidefills are placed loose and/or not compacted, the sides of a flexible structure will move outward to a point where the allowable vertical deflection will be exceeded and pipe failure may occur by buckling. For smaller diameter round pipes, experience has shown that complete vertical (snap-through) buckling failure may occur at about 20% vertical deflection.

Positive soil arching usually occurs over flexible structures with depths of cover greater than the pipe diameter. If the column of fill over the pipe settles slightly more than the sidefills, some of the weight of this column is effectively transferred to the sidefills through shear. In the process, a positive soil arch is mobilized, which reduces the effective load on the structure. Once again, correct installation and backfilling are required for this to occur.

Minimum Cover

When the fill on both sides approaches the top of the structure, the same techniques of spreading shallow layers and compacting thoroughly must be continued as the fill covers the pipe. For the initial layers over the pipe, light compaction equipment, working across the pipe, is recommended.

Minimum cover for structures with spans of less than 3 m is span divided by 6 for highways and span divided by 4 for railways. The absolute minimum cover is 300 mm. Minimum cover for structures greater than 3 m span is outlined in Chapter 6.

After minimum cover requirements of the design have been met, and the structure is locked-into-place, further filling to grade may continue using procedures applicable to regular embankment construction.

Construction Loads

Depth-of-cover tables are based on extensive research, as well as experience and fundamental design principles. However, it must be emphasized that the listed minimums may not be adequate during the construction phase because of higher live loads from construction equipment. When construction equipment with heavy wheel loads, greater than those for which the pipe was designed, is to be driven over or close to the structure, it is the responsibility of the installer to provide the additional cover needed to prevent pipe damage.

Construction load on pipe.

Special Considerations for Pipe-Arches

Pipe-arches require special attention to the backfill material and compaction around the corners. A large amount of the vertical load over the pipe is transmitted into the soil at the corners. Therefore, just as with the foundation, the backfill adjacent to pipe-arch corners must provide at least 200 kPa of bearing resistance. In the case of high fills or deep trenches, a special design may be required for corner backfill zones. Round pipe is recommended in these conditions, rather than the pipe-arch shape.

Special Considerations for Arches

Structural plate arches require extra care during backfilling. Since arches are restrained at the footings, they are more susceptible to the peaking and rolling reactions described earlier (Figure 7.13). Half-circle, and medium or high profile arches, are particularly susceptible.

The ideal backfilling method would be to cover the structure with uniformly thick layers of material conforming to the shape of the arch. Unfortunately, this method is impractical. Arches are backfilled in the same manner as regular pipe, but extra attention is paid to the plumb-bobs to detect any rolling or peaking action. Loading loose earth on top of the crown (top-loading) can be used to reduce the peaking motion.

Cohesive Backfill

Clay soils are not recommended for use as structural backfill, as good compaction is difficult to obtain due to the very narrow optimum range for moisture content vs. density.

Backfilling high-profile highway underpass.

It is difficult to maintain allowable moisture content throughout the backfill operation as a result of snow and rain. Most native clays are above the allowable moisture content and require that either a drying operation be arranged or time is allowed for each lift to air-dry before the next lift is added. Generally, shallower lifts are required for acceptable end results.

If clay soils are used, much closer inspection and field testing must be exercised to assure good results.

Cohesive material should only be used for small pipes; not for larger structures. If cohesive backfill material is to be used, geotechnical advice is recommended.

Hydraulic Backfill

Cement slurries, or other materials that set up without compaction, may be practical for unusual field conditions. Limited trench widths, or relining of existing structures, may warrant the use of self-setting cementitious slurries or grout.

Care must be taken to ensure that all voids are filled, and that the material used will provide the compressive strength required. As with water consolidation techniques, measures should be taken to prevent flotation. Expert advice is recommended.

Submerged Bedding

In rare cases, the installation of corrugated steel pipe may have to be done "in-the-wet". Preferably, the bedding and backfill operation should be conducted entirely in the dry. For sites where it is not possible or practical to divert the stream, it is common practice to pre-assemble and lift, roll, or skid CSP or SPCSP into place.

Since such conditions make it very difficult to ensure good base preparation and proper backfill, the designer should consider first quality granular backfill materials. Expert advice is recommended.

Backfill Summary

In summary, the key points in the backfilling operation are:

1) Use good backfill material.
2) Ensure good backfill and adequate compaction under haunches.
3) Maintain adequate width of backfill.
4) Place material in thin, uniform, layers.
5) Balance fill on either side of the structure as fill progresses.
6) Compact each layer before adding the next layer.
7) Monitor design shape and modify backfill procedures if required.
8) Do not allow heavy equipment over the structure, without adequate protection, until minimum depth of cover is achieved.

PROTECTION OF STRUCTURE DURING CONSTRUCTION

It is important to protect drainage structures during construction because maximum strength does not develop until the fill consolidates. To avoid imposing concentrated loads far in excess of those the structure would normally carry, heavy construction equipment should not cross the structure prematurely. Also, heavy vehicles moving too close to the wall of the structure can create a concentrated load with harmful results.

For the finished structure, the minimum cover required is shown in Chapter 6 fill height tables. Construction loads may require additional cover, again as discussed in Chapter 6.

Box culverts are particularly sensitive to heavy construction wheel loads as well as cover levels. Consult the manufacturer for limits on construction loads and covers.

MULTIPLE STRUCTURE INSTALLATION

When two or more steel drainage structures are installed in parallel lines, the space between them must be adequate to allow proper backfill placement, particularly in the haunch and compaction area. The minimum spacing requirement depends upon the shape and size of the structure as well as the type of backfill material. The design methods in Chapter 6 (Figure 6.2 and page 228) provide recommended minimum spacings for structures.

The minimum spacings provide adequate space to place and compact the backfill. These minimum spacings can be reduced when crushed rock or other flowable backfill materials which naturally flow into the haunch, and require little compaction, are used. When controlled low strength material (CLSM) is used as backfill, the spacing restriction is reduced to that necessary to place the grout between the structures. Regardless of the materials, backfilling between and outside the structures cannot be done independently. Rather, backfilling must proceed on all sides of the structures simultaneously in order to maintain a balanced load.

The room required for the compaction equipment also should be considered in determining spacing between the structures. For example, with structural plate structures it may be desirable to utilize sheepsfoot rollers or mobile equipment for compaction between the structures. The space between structures should allow efficient operation of tamping equipment.

Stormwater detention system installation.

CONSTRUCTION SUPERVISION AND CONTROL

As in all construction activity, the owner should assign a knowledgeable member of the team to supervise the work in progress, and an inspector to ensure the installation is being performed to specification or accepted practice.

Standard small CSP culverts (150 to 1600 mm) should be checked at the foundation, bedding, haunches, springline and minimum cover stages. Generally, construction records need not be kept for CSP in this size range.

Larger CSP (1800 to 3000 mm) and SPCSP should have inspection at all stages of assembly and installation. Documentation of approval by the authorized inspector should be provided for each stage of construction. *Stage inspection* means that the contractor is required to have work inspected at specific points of progress, and to secure authorization to proceed to the next stage, in writing. A typical stage inspection form is shown in Figure 7.14.

SOIL-STEEL BRIDGE STRUCTURE
CONSTRUCTION CONTROL FORM

Owner _____ Location _____

Supervising Engineer and/or Auth./Rep. _____

Contract Firms and Supervising Personnel _____

_____

Design Engineer _____

Geotechnical Assessment _____

Stage Inspection	Dates of Inspection	Action-Date and Time of Stage Approval	Authorization to Next Stage
1. Foundation			
2. Bedding			
3. Erection			
4. Backfill-Haunches			
5. Backfill to Spring Line			
6. Backfill to Crown			
7. Backfill to Min. Cover			

Note:

It is suggested that the above form be attached to the certificate of final inspection, and that "as-constructed" drawings be based on cross-section and deflection surveys at least six months after reaching profile grade. (Note: This is a typical control document only.)

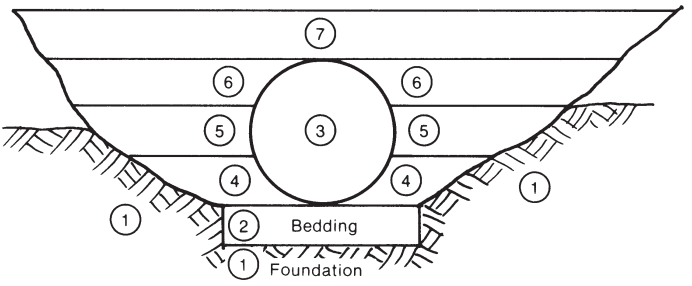

Figure 7.14 Typical inspector's document for construction control of large corrugated steel pipe structures.

Soil-steel structures with spans greater than 3 m should have continuous, and knowledgeable, on-site inspection personnel, authorized to accept or reject procedures or equipment. These engineered structures should be accorded the same degree of inspection and control as is given conventional bridge construction, which is recognized universally as a specialized discipline in engineering and contracting.

END TREATMENT

In many cases, the ends of corrugated steel pipe that project through the embankment can be simply specified as square ends; that is, not beveled or skewed. The square end is lowest in cost and readily adaptable to road widening projects. For larger structures, the slope can often be warped around the ends to avoid severe skews or bevels on the pipe end. When desired for hydraulic considerations, flared end sections can be furnished for shop fabricated pipe. Such end sections can be bolted directly to the pipe.

When specified, ends of corrugated steel structures can be cut (beveled or skewed) to match the embankment slope. However, as indicated in Chapter 6, cutting the ends destroys the ability of the end portion of the structure to resist ring compression forces. Thus, ends with severe cuts must be reinforced, particularly on larger structures. For more complete information see Chapter 6.

The maximum angle permissible for unreinforced skew cut ends is dependent on the pipe's span (or for multiple runs, their combined span) as well as the fill slope. Greater spans or steeper fill slopes limit the degree of skew that can be used without being reinforced with concrete headwalls or ring beams.

For longer span structures and multiple structures, this limit needs to be viewed in regard to maintaining a reasonable balance of soil pressures from side to side, perpendicular to the structure centerlines.

Cut ends are usually attached to the headwalls or ring beams with 19 mm diameter anchor bolts spaced at about 450 mm. (See Chapter 2)

During backfill and construction of headwalls, pipe ends may require temporary bracing to prevent excessive distortion.

The embankment slope around the pipe ends can be protected against erosion by the use of a headwall, a slope pavement, stone riprap, or bags filled with dry sand-cement mixture. Steel sheeting, welded wire, Bin-type retaining wall or gabion headwalls may also provide an efficient, economical solution.

End treatment of large structure.

LINING TO EXTEND LIFE

Need for Lining

Tunnels, conduits and culverts of various materials eventually may begin to deteriorate and lose strength. The decision to rehabilitate or replace the structure is usually based on available methods, safety and economics. Also, because of changing conditions, some older structures must be strengthened to accommodate present and future loads greater than those for which they were originally designed. This discussion covers some of the economical methods used to rehabilitate and strengthen these structures.

Masonry and concrete arches begin to deteriorate over the years. Freeze-thaw is a major source of deterioration, causing mortar to come out of joints, loosening the stone or brick. Excessive settlement will cause concrete to crack. Road salts will cause spalling of concrete. Heavier than anticipated loads further lead to foundation settlement and concrete cracking. The consequence of these deleterious actions is the need for the structure to be strengthened or replaced. Rehabilitation, in many cases, is the most economical method and can be accomplished with least effort.

Lining with a structural steel plate or steel liner plate arch takes little space, and conserves a maximum amount of the original waterway capacity. These steel arches can be supported on new concrete side walls or on original bench walls where feasible. Small arches, 2000 mm or less in span, can be lined with corrugated steel sections.

Thousands of masonry arches have been relined with satisfactory results.

Pressure Grouting

Pressure grouting the space between the old and new structures prevents further collapse of the old structure and avoids concentrated pressures on the new lining. Fifty millimeter grout couplings welded into the liner plates can be furnished at proper intervals for convenience in grouting. A mixture of 1 part cement to 3 parts sand, plus an additive for lubrication, has been found satisfactory. Modern grouting materials, with advantageous properties, are also available.

Grouting should be done carefully. Inspect frequently to see that voids are being thoroughly filled. In fact, due to shrinkage of the grout after set up, the top row of grout holes should be check-grouted after grout placement is completed to be sure that voids due to shrinkage have been filled. Care is required to avoid buckling the liner by using too high a pressure.

Other Shapes of Structures

The same relining method can be applied to full round, elliptical, or other structural shapes that have begun to show signs of deterioration or collapse. New corrugated steel pipe, structural plate or liner plate can be threaded inside an old structure to give it new life for long, trouble-free service.

Frequently, due to excessive deflection or joint settlement, the diameter of the new lining will be much smaller in order to have clearance for threading. In such cases it is sometimes necessary to jack or tunnel a supplementary opening alongside the existing structure to restore the lost end area. See Chapter 11, Tunnel Liner Plates. However, sometimes changes in runoff conditions mean that a smaller opening is acceptable. In such cases, a reduction in waterway area may not be a design issue. The required end area should be investigated before the engineer defines requirements.

Rehabilitation through relining can also be applied to storm or sanitary sewers beginning to show signs of weakening. Methods of liner installation for sewers will vary with sewer size and liner type, but the basic principles here are the same as those used in threading or lining any relatively short culvert open at both ends.

BACKFILL OF LONG SPAN STRUCTURES

Long spans are available in spans up to 23 m. Plate erection may differ from the recommendations for standard structures with added attention given to maintaining structural shape during installation. Proper backfilling and compacting are essential to structural integrity and should comply with instructions given under backfilling.

Foundation

Long span structures are relatively light in weight and often have significant rise dimensions. Typically, they exert lower bearing pressures on the foundation than the structural backfill materials beside the structure. Foundation bearing strength requirements generally relate to the need to support the sidefill without excessive settlement. If any relative settlement occurs, it is preferable that the structure settle relative to the side fill to avoid developing increased loads as a result of negative soil arching.

Where a shape with a bottom is used, plates have relatively larger radii and exert limited pressure on the foundation. It is often only necessary to provide a uniform, stable foundation beneath the structure to support erection activities.

For arch structures, footing designs must recognize the desired relative settlement conditions. The need for excessively large footings or pile supports is indicative of poor soil conditions and therefore, inadequate support beneath the sidefill.

Bedding

Bedding for long span structures with invert plates exceeding 3.7 m in radius requires pre-shaping for a minimum width of 3 m or half the top radius of the structure, whichever is less. This pre-shaping may be simply a V-shape, fine graded in the soil.

Backfill

While basic backfill requirements for long-span structural-plate structures are similar to those for smaller structures, their size is such that excellent control of soil placement and compaction must be maintained to fully mobilize soil-structure interaction. A large portion of their full strength is not realized until backfill (sidefill and overfill) is in place.

Of particular importance is control of structure shape. Equipment and construction procedures used should ensure that excessive structure distortion will not occur. Structure shape should be checked regularly during backfilling to verify acceptability of the construction methods used. The magnitude of allowable shape changes will be specified by the manufacturer.

The manufacturer should provide a qualified construction inspector to aid the engineer during all structure backfilling. The inspector should advise the engineer on the acceptability of all backfill materials and methods, and undertake monitoring of the shape.

Structural backfill material should be placed in horizontal uniform layers not exceeding 200 mm thickness after compaction and should be placed uniformly on

Backfill proceeds parallel to structure.

both sides of the structure. Each layer should be compacted to a density not less than 95% per (Standard Proctor Density). The structure backfill should be constructed to the minimum lines and grades shown on the plans. Permissible exceptions to the structural backfill density requirement are: the area under the invert; the 300 to 450 mm width of soil immediately adjacent to the large radius side plates of high profile arches and inverted pear shapes; and the first horizontal lift of overfill carried ahead of and under construction equipment initially crossing the structure.

Construction of large arch.

BOX CULVERTS

Box culverts are treated differently than soil steel structures. They are very stiff compared to long spans and this makes the placement and compaction of backfill materials easier. Box culverts require an engineered backfill zone that extends 1 m on each side of the outside of the box and up to the minimum cover. The granular backfill material in the engineered backfill zone should be placed uniformly on both sides of the box culvert, in layers not exceeding 200 mm in depth and compacted to a minimum of 95% Standard Proctor Density (ASTM D698). The difference in the levels of backfill on the two sides, at any transverse section, shall not exceed 400 mm.

Heavy vibratory compaction equipment should not be allowed within 1 m of the structure wall or close enough to cause distortion. At no time should the backfill material be dumped next to the structure wall so as to change the shape or the alignment of the structure.

The box culvert must be checked periodically during the backfilling procedure to ensure the shape is consistent with the manufacturer's tolerances. Place and compact the backfill over the top of the structure (once the side fill elevation is above 3/4 of the rise) using light equipment in a direction perpendicular to the longitudinal axis of the structure. No equipment should be allowed over the structure that would exceed the design live load.

It is always recommended that the manufacturer's representative or delegated person be present during erection and backfilling of the box culvert. Compaction testing during construction is the responsibility of the contractor.

A non-woven geotextile should be placed at the ends of reinforcing ribs to prevent backfill from entering the cavity between the barrel and the reinforcing rib (See Figure 7.15).

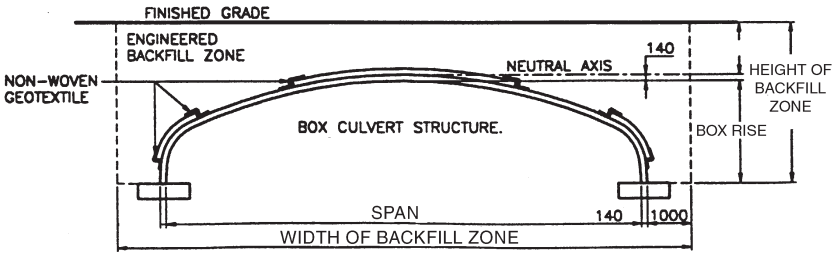

Figure 7.15 Backfill envelope.

STORM WATER DETENTION AND RETENTION STRUCTURES

When there are a series of closely spaced multiple lines connected into a header or manifold pipe, greater care must be exercised in placing the backfill, particularly under the haunches. Fine granular material or CLSM is often preferred.

SUMMARY

Proper installation of any drainage structure will result in longer and more efficient service. This installation and construction chapter is intended to call attention to both good practice and to warn against possible pitfalls. The principles apply to most conditions. It is not a specification but an aid to your own experience.

The following items should be checked to insure proper installation:

1) Check alignment and grade in relation to streambed.
2) Make sure the length of the structure is correct.
3) Excavate to correct width, line and grade.
4) Provide a uniform, stable foundation.
5) Unload and handle structures carefully.
6) Assemble the structure properly.
7) Use a suitable backfill material.
8) Construct bedding appropriate for the size of structure.
9) Place and compact backfill as recommended.
10) Protect structures from heavy, concentrated loads during construction.
11) Use backfill subdrains with properly graded fill.

BIBLIOGRAPHY

AASHTO, *LRFD Bridge Design Specifications*, American Association of State Highway and Transportation Officials, 444 N. Capitol St., N.W., Ste. 249, Washington, D.C. 20001.

AASHTO, *Standard Specifications for Highway Bridges*, American Association of State Highway and Transportation Officials, 444 N. Capitol St., N.W., Ste. 249, Washington, D.C. 20001.

AREMA, *Engineering Manual*, American Railway Engineering and Maintenance-of-Way Association," 8201 Corporate Drive, Ste. 1125, Landover, MD, 20785-2230.

ASTM, "Standard Practice for Structural design of Corrugated Steel Pipe, Pipe-Arches, and Arches for Storm and Sanitary Sewers and Other Buried Applications," A796/A796M, *Annual Book of Standards*, Vol. 01.06, American Society for Testing and Materials, 100 Barr Harbor Drive, PO Box C700, West Conshohocken, PA 19428-2959.

ASTM, "Standard Practice for Installing Factory-Made Corrugated Steel Pipe for Sewers and Other Applications," A798/A798M, *Annual Book of Standards*, Vol. 01.06, American Society for Testing and Materials, 100 Barr Harbor Drive, PO Box C700, West Conshohocken, PA 19428-2959.

ASTM, "Standard Practice for Installing Steel Structural Plate Pipe for Sewers and Other Applications," A807/A807M, *Annual Book of Standards*, Vol. 01.06, American Society for Testing and Materials, 100 Barr Harbor Drive, PO Box C700, West Conshohocken, PA 19428-2959.

CSA, *Canadian Highway Bridge Design Code*, Canadian Standards Association – International, 178 Rexdale Boulevard, Toronto, Ontario, Canada M9W 1R3.

CSPI, *Modern Sewer Design*, Canadian Ed., Corrugated Steel Pipe Institute, 652 Bishop St. N., Unit 2A, Cambridge, Ontario N3H 4V6, 1996.

CHAPTER 8

DURABILITY

INTRODUCTION

Corrugated steel pipe (CSP) has been used successfully since 1896 for storm sewers and culverts throughout North America and in other countries. It continues to provide long service life in installations that cover a wide variety of soil and water conditions.

Since the initial applications before the turn of the century, an estimated 50,000 installations have been the subject of critical investigative research to establish durability guidelines. The behavior of both the soil side and the effluent side of the pipe have been studied. These studies have shown that CSP generally provides outstanding durability with regard to soil side effects, and that virtually any required service life can be attained by selecting appropriate coatings and/or pavings for the invert.

Of course, all pipe materials show some deterioration with time, and such effects vary with site conditions. To aid the engineer in evaluating site conditions and selecting the appropriate CSP system, the main factors affecting durability and the results of field studies will be reviewed before presenting specific guidelines. A summary of the basic metallic coatings and additional nonmetallic protective coatings available for CSP storm sewers concludes this chapter.

FACTORS AFFECTING CSP DURABILITY

Durability in Soil

The durability of metal pipe in soil is a function of several interacting parameters including soil resistivity, acidity (pH), moisture content, soluble salts and oxygen content (aeration). However, all of the corrosion processes involve the flow of current from one location to another (a corrosion cell). Thus, the higher the resistivity, the greater the durability. Table 8.1 lists typical ranges of resistivity values for the primary soil types.

Most soils fall in a pH range of 6 to 8, and that is favorable to durability. Soils with lower pH values (acid soils), which are usually found in areas of high rainfall, tend to be more corrosive.

Granular soils that drain rapidly enhance durability. Conversely, soils with a moisture content above 20 percent tend to be corrosive. High clay content soils tend to hold water longer and therefore are more corrosive than well drained soils. Soil moisture may also contain various dissolved solids removed from the soil itself; this can contribute to corrosion by lowering the resistivity. Conversely, many soil chemicals form insoluble carbonates or hydroxides at buried metal surfaces; this can reduce soil-side corrosion. High levels of chlorides and sulfates will make a soil more aggressive. The relative corrosivity of soils of various physical characteristics is described in Table 8.2.

Table 8.1 Typical Soil Resistivities

Classification	Resistivity Ohm-cm
Clay	750- 2000
Loam	2000-10000
Gravel	10000-30000
Sand	30000-50000
Rock	50000-Infinity*

*Theoretical

Table 8.2 Corrosiveness of Soils

Soil Type	Description of Soil	Aeration	Drainage	Color	Water Table
I Mildly Corrosive	1. Sands or sandy loams 2. Light textured silt loams 3. Porous loams or clay loams thoroughly oxidized to great depths	Good	Good	Uniform color	Very low
II Moderately Corrosive	1. Sandy loams 2. Silt loams 3. Clay loams	Fair	Fair	Slight mottling	Low
III Extremely Corrosive	1. Clay loams 2. Clays	Poor	Poor	Heavy texture Moderate mottling	2 feet to 3 feet below surface
IV Severely Corrosive	1. Muck 2. Peat 3. Tidal marsh 4. Clays and organic soils	Very poor	Very poor	Bluish-gray mottling	At surface; or extreme impermeability

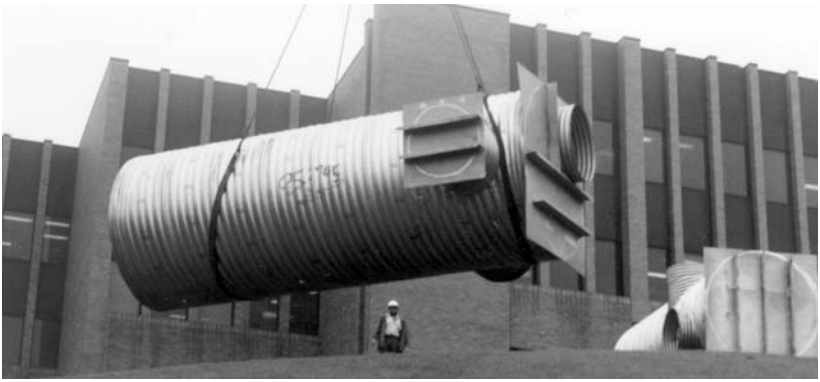

Lifting stormwater detention tank components into place.

Durability in Water

There is little difference in the durability of steel in still natural waters in the pH range of 4.5 to 9.5, because the corrosion products maintain a pH of 9.5 at the steel surface. However, fluctuating water removes these products and increases the level of dissolved gases. Increasing levels of dissolved oxygen and carbon dioxide can accelerate corrosion. The most important effect of carbon dioxide in water relates to its interference with the formation of the protective calcium carbonate scale. This scale develops on pipe surfaces in hard (high calcium carbonate content) flowing waters. Dissolved salts can increase durability by decreasing oxygen solubility and neutralizing acidity, but can increase corrosion if they ionize and decrease resistivity. Field studies have shown that the portion of the pipe most susceptible to corrosion is the invert as it tends to be exposed to water flow for a longer time and, in some cases, it may also be subject to abrasion. New approaches have been offered to evaluate corrosivity of water.

Resistance to Abrasion

In many cases, storm sewers tend to have modest slopes and do not experience significant abrasion problems. However, many culverts may have steeper slopes and more significant bed loads. Abrasion can become significant where flow velocities are high (over about 5 mps). The amount of wear increases if rock or sand is washed down the invert, but is small when the bed load is of a less abrasive character. Various invert treatments can be applied if significant abrasion is anticipated.

FIELD STUDIES OF DURABILITY

Reference to field studies of CSP performance in the region of application under consideration is often the most positive way to appraise CSP durability. Over many years, such studies have been made by various government, and industry investigators and now provide a wealth of accumulated information.

State Studies

California surveyed the condition of culvert pipes at hundreds of locations and developed a method to estimate life based on pH and resistivity. A design chart derived from this work will be presented subsequently. Investigations in Florida, Idaho, Georgia, and Nebraska showed that the method was too conservative compared to their actual service experience. Conversely, studies in the northeast and northwest regions of the United States and more recently in Northern Canada indicated that the method might be too liberal in those regions because of the prevalence of soft water (water containing less than 70 ppm calcium carbonate ($CaCO_3$)).

The results of the various investigations illustrate the variety of conditions that can be found throughout the country, and emphasize the need to use local information when available. Nevertheless, the California method appears to be the most reasonable basis available for general use.

The California study included the combined effects of soil corrosion, water corrosion, and abrasion on the durability of CSP culverts that had not received special maintenance treatment. The pipe invert, which could easily be paved to extend life, was found to be the critical area.

The predictive method developed depended on whether the pH exceeded 7.3. Where the pH was consistently less than 7.3, the study was based on pipes in high mountainous regions with the potential for significant abrasion. Also, at least 70 percent of the pipes were expected to last longer than indicated by the chart.

Where the pH was greater than 7.3, the study was based on pipes in the semiarid and desert areas in the southern part of California. Durability under those conditions, which was generally excellent, would be dominated by soilside corrosion because the average rainfall was less than 250 mm per year and the flow through the invert was only a few times per year.

AISI Study

In 1978 the AISI made a survey of 81 storm sewers located in the states of Florida, Minnesota, South Dakota, Utah, California, Ohio, Indiana, North Carolina, Virginia, Maryland, and Kansas. The study showed that out of the 81 sites inspected, 77 were still in good condition. The age of the sewers ranged from 16 to 65 years. The four that needed maintenance work had an average age of 32 years. One was in an extremely corrosive environment; the resistivity was only 260 ohm-cm, well below recognized minimum values.

NCSPA/AISI Study

In 1986, the NCSPA, with the cooperation of the AISI, commissioned Corrpro Companies, Inc., a corrosion consulting firm located in Medina, Ohio, to conduct a condition and corrosion survey on corrugated steel storm sewer and culvert pipe. The installations investigated were located in 22 states scattered across the United States, and had ages ranging from 20 to 74 years. Soil resistivities ranged from 1326 to 77,000 ohm-cm, and the pH ranged from 5.6 to 10.3.

The study showed that the soil-side corrosion was relatively minimal on most of the pipes examined. Where significant interior corrosion was observed, it was typically limited to the pipe invert. Specific predictive guidelines were developed on a statistical basis. As observed by others, invert pavements can be provided, either factory or field applied, to provide significant additional durability. The data indicate that CSP systems can be specified to provide a service life of 100 years in a variety of soil and water conditions.

Canadian Studies

Many studies have been performed in Canada over the years. One of the earliest investigations was carried out by Golder in 1967. Examinations of CSP in Southwestern Ontario (London) confirmed that the California method was appropriate for predicting service life for local conditions. More recently (1993), British Columbia's Ministry of Transportation and Highways inspected 21 structural plate and galvanized bin-type retaining walls. The installations were all more than 20 years old, the oldest was installed in 1933. The test procedure called for 37 mm diameter coupons to be cut from the structures and be examined for coating thickness in the lab. The soil (and water, where appropriate) was tested for pH resistivity. The service life was estimated to exceed 100 years on all but two structures, abrasion had significantly reduced the service life of the two structures in question.

A very comprehensive study was conducted in the province of Alberta in 1988, inspecting 201 installations for zinc loss, measuring soil and water pH, resistivity as well as electrical potential between the pipe and the soil. The study generated one of the best technical databases to date. The report concluded that a minimum service life of 50 years would be achieved 83% of the time and the average life expectancy was 81 years. Where a longer life was required, a simple check of the site soil and water chemistry could confirm the average service life. Where site conditions indicated that this might be a problem, solutions such as thicker pipe walls or alternate coatings can be cost effective options.

DESIGN LIFE

The project design life of a roadway varies by province and municipality. Many agencies do not have specific requirements. Where a project design life is established, it depends upon the class of roadway and, to some extent difficulties anticipated with future growth, need changes and rehabilitation. Lives of 25 or 50 years are typical with longer design lives used in some cases.

The average service life of a culvert, as with other materials used in highway construction, does not need to meet the project design life. For example, pavements, bridge decks, etc. are often replaced or rehabilitated several times during the project life. The material selection for a culvert or storm sewer should recognize the overall economics including initial cost, maintenance and rehabilitation or replacement costs (see Chapter 9).

DURABILITY GUIDELINES

CSP With Only Metallic Coating

The original California method referred to previously was based on life to first perforation of an unmaintained culvert. However, the consequences of small perforations in a storm sewer are usually minimal. Therefore, the curves on the chart were converted by R. F. Stratfull to average service life curves, using data developed on weight loss and pitting of bare steel samples by the NIST (National Institute of Standards and Technology, formerly the National Bureau of Standards).

Figure 8.1 shows the resulting chart for estimating the average invert service life when designing CSP culverts and storm sewers. This chart, developed for 1.3 mm through 4.2 mm thickness pipe, is often used to determine the average service life for steel structural plate applications as well. Because of its 915 g/m^2 zinc coating, and steel thickness often greater than 4.2 mm, using Figure 8.1 for structural plate may be overly conservative. Where abrasive flow conditions are a factor, structural plate structures can have the invert plates increased in thickness. Arch structures, without an invert, alleviate abrasion concerns.

CSP With Protective Coatings and Pavings

Although there are other types of coatings and pavings, guidelines will only be given for the historically most common type (bituminous). Consult with CSP suppliers for specific information on other types. Polymeric coatings are often used instead of bituminous coatings.

1.Pipe Exterior. Under average conditions, an asphalt coating on the exterior of the pipe can be expected to add about 25 years to service life. Arid regions represent typical environments in which service life is based on the pipe exterior, but it should be remembered that such conditions tend to promote long service lives for pipe with only metallic coatings.

2.Pipe Interior. Invert paving is the preferred method of increasing service life in most cases. In the most common application, an asphalt paving is applied to the bottom 25 percent of the circumference of a round pipe over an asphalt coating. However, it must be realized that under severe abrasive conditions, such paving will erode rapidly. In those cases, a concrete paving can be engineered to meet service requirements. Table 8.3 gives the expected estimated life for an asphalt paved invert

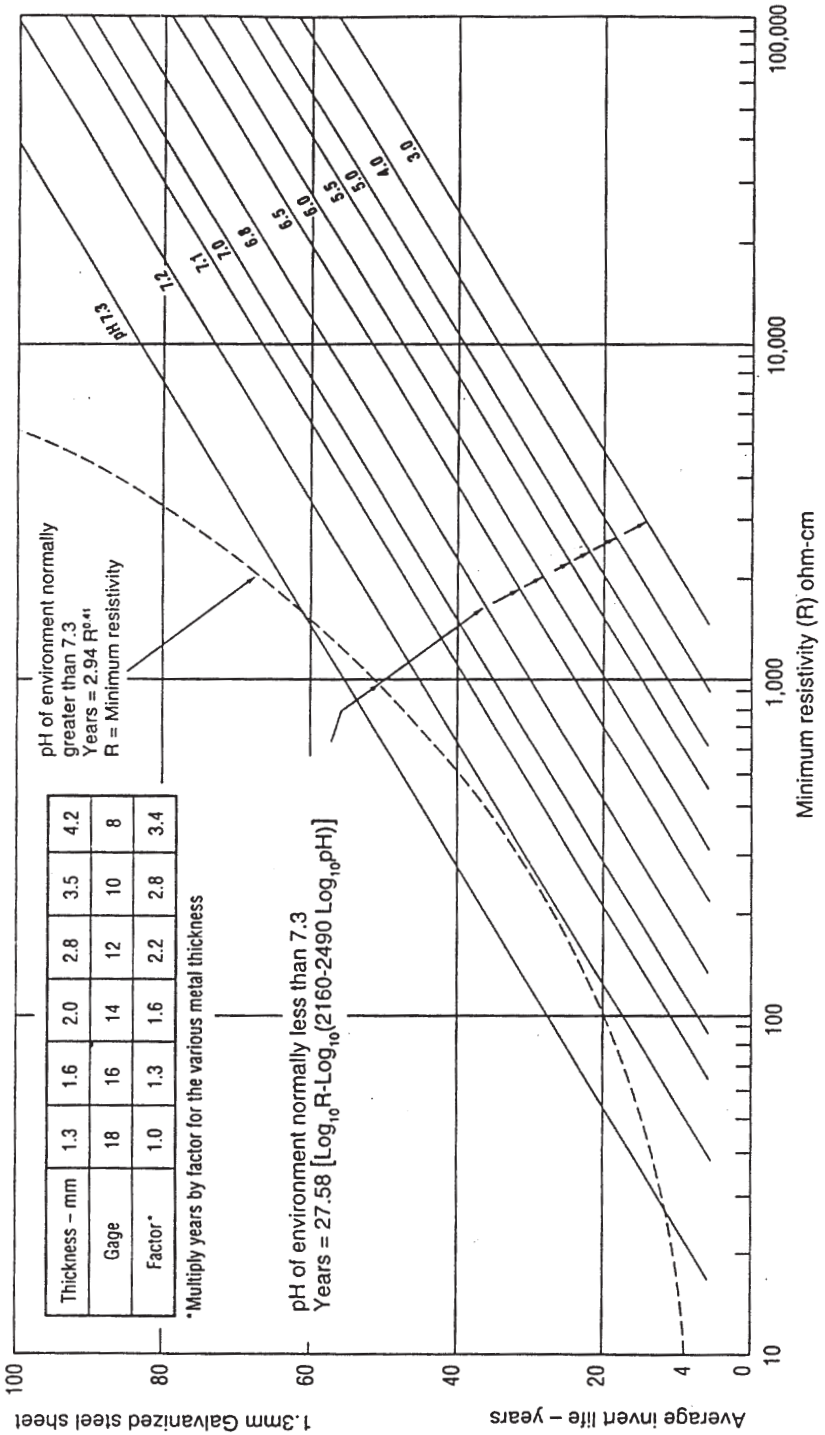

Figure 8.1 Average Service Life Prediction for CSP.

under average conditions as a function of pipe slope (from 1 to 4 percent) and abrasion conditions (characterized as either mild or significant). The added service life ranges from 35 to 15 years, depending on the conditions present.

Example of Durability Design

The following example illustrates the use of Figure 8.1 for designing a culvert project.

Pipe sizes are in the 1 to 3 meter range. Site investigation shows native soils to have a pH of 7.2 and a resistivity of 5,000 ohm-cm. Storm flow is estimated to have a pH of 6.5, a resistivity of 4,500 ohm-cm, and low abrasive conditions. Required average invert service life of the installation is 50 years.

Referring to Figure 8.1 the following life may be obtained for uncoated 1.3 mm thick pipe:

Outside condition 64 years
Inside condition 41 years (controls)
Required multiplier for increased thickness:
50 years/41 year = 1.22

Referring to the multiplier table in Figure 8.1 a metal thickness of 1.6 mm has a multiplier of 1.3, which is greater than the required value of 1.22. Therefore, a thickness of 1.6 mm is satisfactory.

All storm sewer materials and coatings can be degraded by abrasive flows at high velocity. If significant abrasive flow is indicated, a paved invert should be added.

Many different combinations of pipe and coating systems are possible. However, economic considerations will usually dictate the selection of no more than two or three allowable alternatives.

COATINGS FOR CSP

Galvanized steel is the material most used in the CSP industry. Other metallic coatings, and supplemental nonmetallic coatings, are also used for specific applications. The available coatings are described below.

Metallic Coatings

Sheet produced for the manufacture of CSP is supplied with one of the following coatings:

1. Galvanized sheet for CSP is produced in accordance with CSA G401, ASTM A929/A929M or AASHTO M36 with a coating weight of 610 g/m^2 of surface (total both sides). This material is produced on high speed, continuous coating lines with a high degree of uniformity of both coating weight and distribution. It is supplied by the steel producer to the pipe fabricator either as coils or as cut lengths. Continuous coating lines produce a product with a minimal iron/zinc alloy layer. This provides excellent coating adherence and allows forming and lockseaming without damage to the zinc coating. The thickness of the zinc is approximately 0.04 mm on each surface. Other galvanized coatings are also available with different zinc coating weights. Consult the fabricator for details.

2. Aluminum-zinc alloy coated sheet for CSP is in accordance with CSA G401, ASTM A929 / A929M or AASHTO M36. It is also produced on high speed lines. The coating weight is 214 g/m^2 of surface and the coating thickness is 0.03 mm on each surface.

3. CSA G401, ASTM A929 / A929M and AASHTO M-274 provide for the use of a pure aluminum coated product for CSP called Aluminum-coated Type 2. This material is produced on the same type of line as much of the galvanized product, and is furnished in coils and cut lengths. Aluminum coated Type 2 100 has a 305 g/m^2 coating weight. The coating thickness is approximately 0.05 mm on each surface.

Nonmetallic Coatings

CSP can be furnished with one of the following additional coatings to extend its service life:

1. The polymer coating used for CSP is applied as a film or laminate (polyethylene acrylic acid copolymer). This system is applied over the galvanized sheet described above. The polymeric coating is furnished in one grade: 10/10 [250/250]. The numbers designate the minimum coating thickness in mils (thousandths of an inch) and in µm (thousandths of a meter). This product is furnished to the requirements of CSA G401, ASTM A742 / A742M or AASHTO M-245.

Polymer Laminated CSP.

2. Pipe and plate can be post-coated in the plant or field after fabrication with a number of selected polymer materials to meet specific site requirements.

3. Post-coated pipe, where bituminous or concrete coatings or linings are applied to the pipe after fabrication, is produced according to CSA G401 and ASTM A 849.

Bituminous coating and paving, the oldest known system has been used for over 60 years. For enhanced soil-side protection, a coating only is often specified. For enhanced interior protection, a coating with invert paving is often specified. As an alternative to bituminous paving, concrete pavings can be engineered to provide required service life.

Supplier Information

For more specific information on available coatings, linings, and pavings, consult with CSP suppliers. Their experience can prove valuable, particularly when making life-cycle cost analyses, and is usually available upon request.

Table 8.3 Add-on service life for non-metallic coatings, in years

This chart is intended to provide guidelines in determining add-on service life for protective coatings applied to metallic coated CSP. Add-on service life will vary within environmental ranges.

Specific add-on values should be selected based on environmental conditions (abrasion, pH, and resistivity) and experience in comparable environments. Upper limits should be considered for the most favorable environmental conditions while low limits should be considered for the maximum abrasion level and most corrosive environments.

	Water Side		
COATING	Add-On Years	Maximum Abrasion Level	Soil Side Add-On Years
Asphalt Coated	2 - 20	2	25 - 50
Asphalt Coated and Paved	10 - 30	3	25 - 50
Polymerized Bituminous Invert Coated	15 - 40	3	N/A*
Polymer Precoated	25-100	3	50-100
Polymer Precoated and Paved	30-100	3	50-100
Concrete Invert Paved (75 mm cover) -- Notes 1, 2	25 -75	4	N/A

* Use Asphalt Coated values for fully coated product

Note 1: The abrasive resistance of the concrete lining is due to the high strength concrete used in the lining.
Note 2: The abrasive resistance of the concrete paving is due to the 75 mm depth of concrete cover over the steel.

Not all manufacturers in all regions supply these products. Consult the manufacturer

Abrasion Level 1: Non-Abrasive - No bedload.
Abrasion Level 2: Low Abrasion - Minor bedloads of sand and gravel and velocities of 1.5 m/s or less or storm sewer applications.
Abrasion Level 3: Moderate Abrasion - Bedloads of sand and gravel with velocities between 1.5 and 4.5 m/s.
Abrasion Level 4: Severe Abrasion - Heavy bedloads of gravel and rock with velocities exceeding 4.5 m/s.

Compaction parallel to pipe.

BIBLIOGRAPHY

AASHTO, Task Force 22 Report, Subcommittee on New Highway Materials, AASHTO-AGC-ARTBA Joint Committee, American Association of State Highway and Transportation Officials, 444 North Capitol St. NW, Suite 225, Washington, DC 20001, 1990.

Anon., Durability of Metal Pipe Culverts, Idaho Department of Highways, Research Project No. 16, Boise, ID, 1965.

Anon, Nebraska Soil Resistivity and pH Investigation as Related to Metal Culvert Life, Nebraska Department of Roads, 1969.

Anon, Symposium on Durability of Culverts and Storm Drains, Transportation Research Record, No. I 00 1, Transportation Research Board, Washington, DC, 1984.

Ashworth, V., Googan, C. G., Jacob, W. R., Underground Corrosion and Its Control, *Corrosion Australasia*, October, 1986.

AWWA, *Steel Pipe - A Guide for Design and Installation*, Manual M11, American Water Works Association, Denver, CO 1989.

Beaton, J. L., and Stratful, R. F., Field Test for Estimating Service Life of Corrugated Metal Culverts *Proceedings*, Highway Research Board, Vol. 41, Washington, DC, 1962.

Bednar, L., Galvanized Steel Drainage Pipe Durability Estimation with a Modified California Chart, *Transportation Research Record 1231*, Washington, DC, 1989.

Bednar, L., Durability of Plain Galvanized Steel Drainage Pipe in South America-Criteria for Selection of Plain Galvanized, presented at 68th Annual Meeting of Transportation Research Board, Washington, DC, 1989.

Bellair, P. J., and Ewing, J. P., Metal-Loss Rates of Uncoated Steel and Aluminum Culverts in New York, Research Report 115, Engineering R & D Bureau, New York Department of Transportation, Albany, NY, 1984.

Brown, R. F., Kessler, R. J., and Brawner, J. B., Performance Evaluation of Corrugated Metal Pipes in Florida, Florida Department of Transportation, Gainesville, FL, 1976.

Bushman, 1. B., et al, Condition and Corrosion Survey on Corrugated Steel Storm Sewer and Culvert Pipe, First and Second Interim Reports, Corrpro Companies, Inc., Medina, OH, 1987.

Bushman, J. B., et al, Condition and Corrosion Survey- Soil Side Durability of Corrugated Steel Pipe, Final Report, Corrpro Companies, Inc., Medina, OH, 1991.

Coburn, S. K., Corrosion in Fresh Water, *Metals Handbook*, 9th Ed., Vol. 1, ASM, Metals Park, OH, 1978.

Fitzgerald, J. H. III, The Future as a Reflection of the Past, Effects of Soil Characteristics on Corrosion, *STP 1013,* ASTM, Chaker, V., and Palmer, J. D., Editors, ASTM, Philadelphia, PA, 1989.

Fraseoia, R. Performance of Experimental Metal Culverts, Research Update, No. U8 8-19, 1988, Materials and Research Division, Vermont Agency of Transportation, VT.

Leason, J. K., and Standley, R. S., Least Cost Analysis, National Corrugated Steel Pipe Association, Washington, DC, March 1986.

Little, H. P., Boedecker, K. J., and Brawner, J. B., Performance Evaluation of Corrugated Metal Culverts in Georgia, Southeastern Corrugated Steel Pipe Association, Inc., 1977.

Logan, K. H., Underground Corrosion, *Circular 450*, National Bureau of Standards, U.S. Government Printing Office, Washington, DC, 1945.

NCHRP, Durability of Drainage Pipe, *NCHRP Synthesis of Highway Practice 50*, Transportation Research Board, Washington, DC, 1978.

NCHRP, Service Life of Drainage Pipe, *NCHRP Synthesis of Highway Practice 254*, Transportation Research Board, Washington, DC, 1998.

Potter, J. C., Life Cycle Costs for Drainage Structures, Technical Report GL-87, U.S. Army Corps of Engineers, Washington, DC, 1987.

Romanoff, M., Underground Corrosion, *Circular 579*, National Bureau of Standards, U.S. Government Printing Office, Washington, DC, 1957.

Stratful, R. F., Durability of Corrugated Steel Pipe, Special Publication, United States Steel, Pittsburgh, PA, 1986.

Stratful, R. F., A New Test for Estimating Soil Corrosivity Based on Investigation of Metal Highway Culverts, *Corrosion*, Vol. 17, No. I 0, NACE, Houston, TX, 1961.

Wilson, C. L., Oates, J. A., *Corrosion and the Maintenance Engineer*, 2nd Ed., Hart, 1968.

Wonsiewicz, T. J., Life Cycle Cost Analysis-Key Assumptions and Sensitivity of Results, Transportation Research Board, Washington, DC, January 1988.

Wonsiewicz, T. J., Life Cycle Cost Analysis Discount Rates and Inflation, *Proceedings*, International Conference on Pipeline Design and Installation, ASCE, March 1990.

CHAPTER 9

VALUE ENGINEERING AND LEAST COST ANALYSIS

INTRODUCTION

This chapter deals with the important subject of cost efficiency. Today's engineer is turning to rational cost analysis in lieu of subjective selection of materials and designs. This requires both value engineering and least cost analysis. Value Engineering is the critical first step to insure that correct alternates are used in the least cost analysis. Otherwise, the engineer may be comparing apples and oranges.

This handbook offers guidelines for designing corrugated steel pipe systems that are structurally adequate, hydraulically efficient, durable and easily maintained. By following these guidelines equal or superior performance can be realized through use of CSP products. Therefore, the basic techniques of value engineering are applicable. By allowing design and bid alternates, including the proper corrugated steel pipe system, savings on the order of 20% can frequently be realized. Alternative designs offer even more promise and savings of as much as 90% are possible compared to the costs of conventional design. Thus, innovative use of corrugated steel pipe design techniques can offer truly substantial savings, with no sacrifice in either quality or performance.

Backfilling long span structure with structural plate ribs.

VALUE ENGINEERING

Value engineering is defined by the Society of American value engineering as: "The systematic application of recognized techniques which identify the function of a product or service, establish a value for that function and provide the necessary function reliably at the lowest overall cost." In all instances, the required function should be achieved at the lowest possible life cycle cost consistent with requirements for performance, maintainability, safety and aesthetics.

Barriers to cost effectiveness are listed as lack of information, wrong beliefs, habitual thinking, risk of personal loss, reluctance to seek advice, negative attitudes, overspecifying and poor human relations.

Value engineering is functionally oriented and consists of the systematic application of recognized techniques embodied in the job plan. It entails:

1) Identification of the function
2) Placing a price tag on that function, and
3) Developing alternate means to accomplish the function without any sacrifice of necessary quality.

Many value engineering recommendations or decisions are borne of necessity involving perhaps the availability of equipment or material, or physical limitations of time and topography. These are the very reasons that it came into being and in these instances, the alternative selected should not be considered an inferior substitute. Such circumstances force a re-study of the function. If the appropriate job plan is carefully followed, the alternative selected should be equal if not better, and capable of functioning within the new limitations.

A value engineering analysis of standard plans can be very revealing and beneficial in most cases. This may be done as a team effort on all standards currently in use by an agency or it may be done on a project by project basis. Standard specifications should also be subjected to detailed analysis.

Designers are in some cases encouraged to be production oriented and to prepare completed plans as quickly as possible. However, time and effort are frequently well spent in applying the principles to individual project design.

Do local conditions indicate that receipt of bids on alternate designs is warranted? Do plans permit contractor selection of alternate designs and materials for specific bid items?

These questions may be very pertinent in ensuring the most efficient culvert and storm sewer designs. Affording contractors an opportunity to bid on alternates may result in a saving that was not previously evident. Permitting alternatives may further encourage contractors and suppliers, who would not otherwise do so, to show interest in a proposal.

The utility of value engineering as a cost control technique has long been recognized by the U.S. Federal Government. It was first used by the Navy in 1954 and since then at least 14 Federal Agencies, including the U.S. Army Corps of Engineers have used these analyses in the design and/or construction of facilities.

As an example, the 1970 Federal Aid Highway Act required that for the projects where the Secretary deems it advisable, a value engineering or other cost reduction analysis must be conducted. In addition, the EPA developed a mandatory value engineering analysis requirement for its larger projects and is actively encouraging voluntary engineering studies on its larger projects. Thus, these agencies obviously feel that the potential benefit resulting from such analysis far outweighs the cost incurred by the taxpayer in conducting them.

INCLUSIONS OF ALTERNATIVE MATERIALS IN A PROJECT INDUCES LOWER PRICES

A publication of the AASHTO-AGC-ARTBA entitled ”Guidelines for Value Engineering" summarizes the basic processes as applied to street and highway construction. Value engineering provides a formalized approach which encourages creativity both during the design process and after the bid letting. During the design

process it involves the consideration of both alternate products with equal performance and alternative designs. After bid award, it involves the substitution of different project plans together with revised design or materials to meet time constraints, material shortages, or other unforeseen occurrences which would affect either the completion date or quality of the finished product. The following recommendations on alternate designs is reproduced in its entirety from a study by the Subcommittee on Construction Costs.

Alternate Designs and Bids on Pipe

A) Description of Proposal

In many cases the site conditions pertaining to pipe installations are such that alternative designs involving various pipe products will yield reasonably equivalent end results from the standpoint of serviceability. Moreover, in these cases no one pipe product is clearly less costly than the others, particularly where all suitable products are allowed to compete. Therefore, it is proposed that wherever site conditions will permit, alternative designs be prepared for all types of pipe that can be expected to perform satisfactorily and are reasonably competitive in price and the least costly alternative be selected for use, with the costs being determined by the competitive bidding process.

B) Examples or References

In the absence of unusual site conditions, alternative designs for a typical culvert installation may provide for bituminous coated corrugated metal pipe and reinforced concrete pipe, with a size differential when required for hydraulic performance. In bidding for the related construction work, bidders could be required to submit a bid for performing the work with the understanding that the successful bidder could furnish any one of the permitted types of pipe.

C) Recommendation for Implementation

The availability of competitive pipe products should be established on a statewide basis or on a regional basis within a state. Procedures should be instituted, where necessary, to assure that all suitable types of pipe are considered during the design of pipe installations. Any necessary changes in bidding procedures and construction specifications should also be instituted.

D) Advantages

Acceptance of this proposal should permit the greatest feasible amount of competition among pipe products. This will permit all related economic factors to operate freely in establishing the lowest prices for pipe installations.

E) Precautions

Complex bidding procedures should not be necessary and should be avoided. In any case, bidders should be fully informed as to how the procedures are intended to operate. Care must be taken to avoid alternative designs in situations where choice of a single design is dictated by site conditions.

There are two basic ways to use value engineering: (1) at the design stage to determine the most cost effective material or design to specify without alternates; (2) to select the most cost effective bid submitted on alternates.

In the first case it is important to use value engineering principles when calculating estimates for various materials being considered. This means including in the estimates all the factors bidders would consider in their bids. Installation cost differences between concrete and corrugated steel pipe result from pipe dimensions, foundation and bedding, required equipment and speed of assembly. Also, factors affecting public safety and convenience such as detours and total time on job should be considered. In the second case, where alternate bids are taken, it is important to clearly spell out in the plans and specifications the differences in pipe and trench dimensions for concrete and corrugated steel pipe. Foundation, bedding and minimum cover differences may also be significant. Construction time schedule differences could be a factor and should be required to be shown.

COST SAVINGS IN ALTERNATE DESIGNS

In addition to the savings resulting in allowing pipe alternates in conventional designs, alternative designs based on entirely different water management procedures can offer even more significant savings. One example is in the design of storm water systems which meet environmental requirements in force today. By using these techniques on a total system basis, it is possible to minimize the use of expensive surface lands for ponds, to reduce pipe sizes for conventional systems and the cost of the pipe itself can frequently be reduced.

An excellent example of the application of value engineering principles in a real situation is in the use of large diameter CSP as an alternative to bridge replacement. When faced with limited funds and the need to replace two deteriorating concrete flat slab bridges, a highways department developed an innovative approach. Utilizing 2.4 m diameter pipe at one location and 2840 x 1905 mm pipe-arch at the second, special head walls and wing walls and flowable fill to grout all voids, a 51% cost savings was realized:

Remove and Replace Alternative	
Class A Concrete	$277,200
Detours, Traffic control	74,000
Remove old structure	30,000
Total Estimated Cost	$381,200
Rehab with CSP	
Class A Concrete	$99,550
Corrugated Steel Pipe	78,200
Flowable Fill	7,174
Riprap	2,278
Total Actual Cost	$187,202
Cost Savings	
Amount	$193,998
Percent	51%

In addition to the lower cost, the CSP alternative did not impede traffic flow. No detours were necessary, the roadway was widened, and the load carrying capacity was increased.

Pipe nested for economical shipment.

LEAST COST ANALYSIS

Least cost analysis is a technique that compares differing series of expenditures by restating them in terms of the present worth of the expenditures. In this way, competing designs which have differing cost expenditures at different intervals can be compared and the least cost design chosen on a present worth basis.

The technique is familiar to most engineers and engineering students. Anticipated future costs are discounted by using a present worth discount table and restated in terms of today's costs. Once discounted, all the costs for one project design can be added together and fairly compared to all of the costs for a competing project design.

Least cost analysis is well suited for comparing the competing bids for culvert and storm sewer projects when pipe material alternates such as corrugated steel (CSP) and reinforced concrete (RCP) are specified.

The least cost equations are fairly straightforward. Tables can be used to determine the various present worth factors of competing projects or numerous computer programs and hand held calculators are available to solve these problems.

The real difficulty with the method is making unbiased assumptions which produce fair comparisons of the alternate bids. The assumptions include project design life, project residual values at the end of its design life, material service life, rehabilitation costs and inflation and discount rates.

Design Life

Before any life cycle cost comparisons of materials can be made, the basic project design life must be established. In the case of some agencies it is already a matter of policy. For example, a 50 year design life for primary provincial highway culverts is common. The project design life has nothing directly to do with the various competitive materials available for the job. However, the least cost analysis of competitive materials is directly affected by the project design life.

There are two key factors that determine a proper project design life. One is probable obsolescence and the other is available funds. A design engineer may ignore these factors and select a design life based only on intuitive sense of logic. This mistake is particularly easy to make in the culvert and storm sewer field. Buried

structures create a specter of excessive replacement costs; therefore, the tendency is to arbitrarily assign an excessive design life.

A rational determination of design life must consider obsolescence. How far in the future will the functional capacity be adequate? What is required in order to increase the capacity? Is a parallel line feasible? Does location dictate destruction of the old pipe to build a larger structure? All these questions and others must be considered and evaluated. Do you oversize now or not? If so, how much? It may require least cost analysis to evaluate the design capacity that is economically justified at this time to accommodate future requirements.

In addition to obsolescence in functional capacity, there is obsolescence in need. Will the basic facility be needed beyond some future date? The statistical probability that a specific facility will be totally abandoned after a certain period will set some upper limit of design life.

After rational study and economic analysis has determined a capacity (size), and a realistic design life for that capacity facility, there is still the question of available funds. Regardless of theoretical long-term economics, current resources will set practical limitations on building for future needs. Taxpayers and owners are not motivated to bear costs now which cannot possibly benefit them. This results in a limit on design life that could perhaps best be called political.

The result of obsolescence concerns and money factors is a practical limit on design life of 50 years for most public works projects. The taxpaying public can relate to a benefit to them in a 50 year life. Design lives exceeding 50 years are speculative at best.

Long span structure for grade separation.

Residual Values

The residual or salvage value should reflect the estimated value of the facility at the end of the project design life. Current experience on projects to increase drainage capacity indicate there is little probability of any salvage value for materials that must be removed to permit expansion. For new projects, the higher the likelihood of future functional obsolescence then the less likely there will be any salvage value. A residual value should not be assigned to account for any material whose estimated service life is greater than the project design life.

Material Service Life

After the design life of the facility (sewer, culvert) has been selected, the maintenance-free service life of the alternate pipe materials must be established. (Maintenance required of any type of pipe to maintain flow is not pertinent and is not the type referred to here.)

The validity of the least cost analysis will be no better than the estimated maintenance-free life (service life) selected. Unless this selection is given adequate effort and an objective evaluation, the least cost analysis will be only an exercise.

The average service life of various pipe materials varies with the environment, the effluent and the slope. Regional durability studies of culverts are available for most areas and can be used for storm drains, too. Additionally, numerous published reports by agencies and organizations are available, and in conjunction with simple jobsite tests of the environment and effluent, can develop material service life appropriate for that region and application. (See Chapter 8.)

Recurring Annual Costs

These are future costs such as inspection, cleaning, etc. that are expected to occur in about the same amount (in constant dollars) from year to year. These costs need not be included in the study if they are expected to be the same for each alternative. The present value (PV) for recurring annual costs can be calculated as:

$$PV = A_r \frac{(1 + d_r)^n - 1}{d_r (1 + d_r)^n}$$

Where: A_r = recurring annual amount
d_r = discount rate
n = number of years

Rehabilitation vs. Replacement

The end of average service life does not mean replacement of the pipe as is often assumed in many life cycle articles. It does mean expenditure of funds at that time for pipe material maintenance. Planned maintenance always reduces the cost of "neglect and replace" practices. This principle is entirely applicable to pipe culverts

Lifting box culvert into place.

and storm sewers. Currently there are several economical pipe rehab techniques being used. It is inevitable that easier and cheaper methods will be developed in the years between now and the end of a typical average service life period.

The normal type of rehabilitation required for a corrugated steel pipe line is invert repair. The typical pipe can be repaired and made serviceable for another "life cycle" with relatively modest invert treatment. Inspections, even on only a 10 year frequency, will permit timely repair to be made while it is still inexpensive.

The soundness and need for such inspections is essential to all infrastructure and must be done regardless of the materials involved. Such inspections allow a low cost, planned invert maintenance. Actual rehab cost will vary with the pipe size and the timeliness of the repair.

Based on prior and continuing technical advances, rehabilitation should be no more than 25% of original pipe cost. Higher costs would apply to rehabilitation of pipes not maintained at the end of their average service life. In those cases, however, many more years of service squeezed out of the structure offset some of that cost. For further information on pipe maintenance and rehabilitation see Chapter 10.

Discount Rates and Inflation

The method of handling these two components probably contributes to most of the confusion in developing least cost comparisons. There are many articles and texts which go on at length about whether to inflate or not, by how much, and what should be used for discount rates. The logic for each seems coherent and yet, depending on the approach used, the calculations often result in completely different choices appearing to have the lowest cost. How can that be?

The answer lies in gaining an understanding of how the present value is affected over a range of discount rates. Present value is developed by $1/(1+d_r)^n$ where d_r = the discount rate, and n = number of years until a future expenditure occurs. In general, greater significance is given to future spending at low discount rates, and less significance at high discount rates, as shown in the following Table 9.1 and Figure 9.1.

Table 9.1

Present value of $1.00 expended at various intervals and discount rates

Number of Years, n	Discount Rate, d_r		
	3%	6%	9%
0	1.00	1.00	1.00
25	.48	.23	.12
50	.23	.05	.01
75	.11	.01	.01

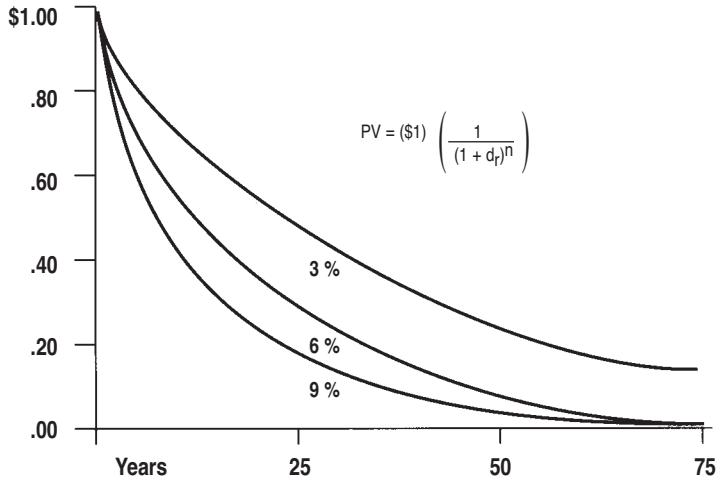

Figure 9.1 Present value of $1.00 expended at various intervals and discount rates.

In contrast to the three times increase in discount rates from 3% to 9%, there is a 23 times decrease in the significance in the present values of expenditures occurring in year 50 (0.23 vs. 0.01). Also, since present value factors behave exponentially, a 3 point difference at higher rates (9% vs. 6%) has less of a present value significance than the same 3 point difference at low rates (3% vs. 6%).

The shape of the present value curves indicate that the significance of future expenditures diminishes as time increases and as the discount rate increases.

Discount Rates

The discount rate is used to convert costs occurring at different times to equivalent costs at a common point in time. The rate selected should reflect the owner's time value of money. That is, the rate should represent the rate of interest that makes the owner indifferent between paying or receiving a dollar now or at some future point in time.

There is no single correct discount rate for all owners in either the public or private sector. Rate selection should be guided by the value of money to the owner. In the private sector, this is usually influenced by the rate of return the owner can achieve on projects that have comparable risk. This is sometimes referred to as the owner's "opportunity cost of capital."

In the public sector, discount rates are often mandated by policy or legislation. The U.S. Office of Management and Budget in Circular A-94 requires that federal projects use, in most cases, a discount rate of 10%. These guidelines are further amplified in practices developed by the U.S. Water Resources Council and the Department of the Army (see bibliography). Some, but not all, states have established their own values for discount rates.

Borrowing Rates

There is a tendency in the public sector to use the cost to borrow money (interest rate) as the discount rate. This is incorrect. The interest rate on bond financing represents a "cost" to the project and does not reflect the "value" of money used on the projects.

The distinction between cost and value is subtle but important. Borrowed money does not pay for the project, taxpayers do. Borrowed funds are repaid, over time, with taxes collected from taxpayers. Therefore, the discount rates used for public projects should be based on the time value of money to the taxpayer, which will always be greater than the interest rate on public bonds. It is that logic that led the federal government to inflation.

Inflation

Several approaches can be used in the treatment of inflation. First, the analyst should determine whether any legislated or mandated policy applies to the project under consideration. If not, several choices are possible. If it is assumed that future inflation will affect all costs and/or benefits in a uniform manner over the life of the project, then a straight forward approach can be used. All costs, both present and future, can be estimated in base year or current year dollars and discounted back to the present using a "real" discount rate (excluding inflation). The real discount rate (d_r) and its corresponding nominal discount rate (d_n) are related as follows:

$$d_r = \frac{(1 + d_n)}{(1 + I)} - 1 \quad \text{or} \quad d_n = (1 + d_r)(1 + I) - 1$$

where I = the general rate of inflation. The real discount rate can be calculated based on a user selected nominal discount rate and general rate of inflation. For example, a 10% nominal discount rate and a 5% inflation rate results in a real discount rate of 4.76% (Note: This is a slightly different result than the arithmetic difference between 10% and 5%).

A less direct approach, but one yielding the same results, is for the analyst to make specific projections of future costs. Future costs can be projected by multiplying the estimated cost expressed in base year or current cost dollars by the inflation factor (l+I)n where I is the general rate of inflation and "n" is the number of years into the future.

A third method is to apply inflation selectively to certain elements of cost. For example, some federal agencies are required to recognize inflation on energy costs only; general inflation is to be ignored. Dealing with inflation incrementally adds to the computational complexity.

Recommendations

The analyst must first determine if the project owner has or is subject to any policy that specifies the treatment of discount rates and inflation. In the absence of specific guidance, it is recommended that a minimum nominal discount rate of 10% be used. Long term price inflation should be limited to no more than 5%.

Calculations

The following example is presented to illustrate the comparison on two drainage pipe alternatives.

Basic Assumptions

Project Design Life: 50 years

Owner Selected

Discount Rate (d_n) 10% (nominal)

Inflation Rate (I): 5%

Corrugated Steel Pipe

Initial Cost: $150,000

Service Life: 40 Years

Current Cost of Invert Rehab at 25% of Initial Cost: $37,500

Salvage Value: None

Annual Maintenance Cost: $500

Concrete Pipe

Initial Cost: $180,000

Service Life: 75 Years

Salvage Value: None

Annual Maintenance Cost: $500.

Since the $500 annual maintenance costs affect both cases equally, they can be excluded from the analysis. The next step is to calculate the real discount rate where:

$$d_r = \frac{(1 + d_n)}{(1 + I)} - 1 = \frac{1.10}{1.05} - 1 = 0.0476$$

The present value for the CSP alternative is then determined as:

Initial Cost = $150,000

$$\text{Rehab Cost} = (37{,}500)\left[\frac{1}{(1 + 0.0476)^{40}}\right] = \$5{,}800$$

Total Present Value = $155,800

Since the concrete pipe alternative is estimated not to require future expenditures, its present value is equal to its original cost of $ 180,000. Accordingly, the CSP alternate has a lower present value and therefore, represents the least cost alternative.

	Present Value
Concrete Pipe	$180,000
Corrugated Steel Pipe	155,800
CSP Advantage	$ 24,200

Sensitivity of Results

A sensitivity analysis can be used to determine how variations in key assumptions affect the outcome of the least cost analysis. This can be particularly helpful when the present value of alternatives are close or there is uncertainty regarding certain assumptions.

In general, the factors having the greatest influence on the ranking of alternatives are the magnitude of the discount rate and the differential in initial costs. The significance of future expenditures is lessened when higher discount rates are assumed and increased at lower discount rates. Reasonable variations in the magnitude and timing of future expenditures usually have only a small effect on the results. Based on the proceeding example, Table 9.2 illustrates how reasonable variations in assumptions affect the $24,200 difference in present value.

Table 9.2 Sensitivity analysis for example problem

Basic Assumption	Variation	Increase / (Decrease) in $24,200 Present Value Differential
10 % Discount Rate	9 %	$(2,600)
	11 %	1,800
Rehab in 40 Years	35 Years	(1,600)
	45 Years	1,200
25% Rehab Cost	20 %	1,200
	30 %	(1,200)

SUMMARY

The principles of value engineering are essential in a cost effective approach to design. Least cost analysis is an especially effective method to compare alternatives that are characterized by different cash flows over the project life. The method requires objective and realistic assumptions concerning project design life, material service life, future expenditures, the owner's time value of money (discount rate), and future inflation.

BIBLIOGRAPHY

ASTM, "Standard Practice for Life-Cycle Cost Analysis of Corrugated Metal Pipe Used for Culverts, Storm Sewers, and Other Buried Conduits," A930, *Annual Book of Standards*, Vol. 01.06, American Society for Testing and Materials, 100 Barr Harbor Drive, PO Box C700, West Conshohocken, PA 19428-2959.

Anon., "Economic Studies for Military Construction Design-Applications," TM 5-802-1, Department of the Army, Washington, D.C., December 31, 1986.

Beenhakker, H. L., *Handbook for the Analysis of Capital Investments*," Greenwood Press, Westport, Connecticut, 1976.

Grant, E. L., and Ireson, W. G., *Principles of Engineering Economy*, 5th ed., The Roland Press Co., New York, 1970.

Leason, J. K., and Standley, R. S., "Least Cost Analysis," National Corrugated Steel Pipe Association, Washington, D.C., March 1986.

Lindley, B.R., "Bridge Replacement Alternate Design", Texas Department of Highways and Public Transportation, May 1991.

NCSPA, "CSP Durability Guide," National Corrugated Steel Pipe Association, Washington, D.C., May 2000.

OMB, "Guidelines and Discount Rates for Benefit-Cost Analysis of Federal Programs," Circular A-94, Office of Management and Budget, Washington, D.C., October 29, 1992.

Potter, J. C., "Life Cycle Costs for Drainage Structures," Technical Report GL-87, U.S. Army Corps of Engineers, Washington, DC, 1987.

Tauxe, G. W., and Wonsiewicz, T.J., "Least Cost Analysis Computer Program," National Corrugated Steel Association, Washington, D.C.

Wonsiewicz, T. J., "Life Cycle Cost Analysis-Key Assumptions and Sensitivity of Results," Transportation Research Board, Washington, DC, January 1988.

Wonsiewicz, T. J., "Life Cycle Cost Analysis Discount Rates and Inflation," *Proceedings,* International Conference on Pipeline Design and Installation, ASCE, March 1990.

WRC, "Economic and Environmental Principles and Guidelines for Water and Related Land Resources Implementation Studies," PB 84-199405, U.S. Water Resources Council, Department of the Interior, Washington, D.C., February 3, 1983.

CHAPTER 10

INSPECTION MAINTENANCE AND REHABILITATION

INSPECTION

Drainage systems should be inspected on a routine basis to ensure that they are functioning properly. Inspections can be on an annual or semi-annual basis, but should always be conducted following major storms. Inspection of sewers, culverts and other soil-metal structures can be carried out visually and recorded with still photographs or videos. Current electronic technology enables the inspector to communicate directly with a central office using facsimile or video transmission. Inspection software has been developed by various provincial highway departments which provide a more consistent method of reporting. Inspection falls into the two general categories of environmental and structural assessment.

Environmental Assessment

Environmental assessment includes the conditions of soil side corrosion, water side corrosion, water side abrasion and clogging. Soil side corrosion can be determined by excavating a trench outside the structure or by inspecting the exposed overhang at the inlet and outlet ends of the structure. Inspection includes a visual examination for spalling, red rusting, pitting and perforating. The soil corrosivity including pH and resistivity is recorded along with moisture, soluble salts and oxygen content.

Water side corrosion is determined by a visual examination for spalling, red rusting, pitting and perforating. The water corrosivity including pH and resistivity is also recorded.

Water side abrasion is also determined visually along with an assessment of structure slope, flow velocity and upstream bed load of either rock or sand.

Clogging due to the accumulation of sediment or debris can be readily assessed visually and measured manually.

Structural Assessment

Structural assessment includes shape monitoring, joint separation, crimping of the conduit wall, bolt hole tears, bearing failure of the longitudinal seams, excessive deformation, invert lifting, pipe end lifting, and pipe end distortion.

Maintenance procedures should be developed to provide a consistent and cost effective approach for sewer and culvert assessment. Good records should be kept on all maintenance and repair operations to help plan and prioritize future work. The date of installation, a description and configuration of the product, the date of subsequent inspections and maintenance should be properly recorded.

Shape Monitoring

Traditional monitoring methods have usually consisted of a visual inspection, with actual measurements being taken only if serious signs of distress are observed. Other than the span and rise, geometric measurements are normally limited to selected

Pipe inspection.

chord lengths and offsets at specified cross sections. These dimensions can be related to the curvature of a section. The performance of the structure is judged primarily on deformation stability. Excessive flattening of a section makes it susceptible to snap-through instability. The extent of flattening that a structure can tolerate is not easily defined. Arbitrary limits on the reduction in the midordinate heights have been used to define the severity of the deformations and the remedial measures required. The changes are usually measured from the design shape, since the as-built dimensions are rarely measured. Being flexible, it is possible that the plates were deformed from the design shape during construction, with little or no subsequent deformations. As built measurements should be taken immediately after installation. Only an ongoing monitoring of the structure can confirm that the deformations have stabilized.

In photogrammetric monitoring, an object is photographed using specialized equipment following set procedures, and measurements are obtained from the photographic images. These measurements and some externally supplied information are used to determine, either analogically or analytically, the location of reference points in the three-dimensional object space. Photogrammetry is particularly useful in monitoring large or difficult-to-access structures.

Crimping of the Conduit Wall

Crimping can be regarded as a consequence of local buckling in which the metallic shell buckles into a large number of waves, each of relatively small length. It can occur in the compression zone of the wall section when the conduit wall undergoes large bending deformations. This kind of crimping usually takes place in conduit wall segments of relatively small radius of curvature. It indicates that the soil behind the segment is not dense enough to prevent excessive bending deformations.

Crimping can also occur in an entire conduit wall section subjected to excessive thrust while being supported by very well compacted backfill. Although the incidence of this kind of crimping is rare, it is known to have occurred in structures with circular conduits, which were constructed with good-quality, well-compacted backfill on relatively yielding foundation. It is assumed that the long-term foundation settlements of these structures induced negative arching, thus subjecting the conduit wall to greater and greater thrusts as time passed, until the thrust exceeded the buckling capacity of the conduit wall even though it was well supported.

Buckling of the entire conduit wall section into waves of small length has a redeeming feature. By reducing the axial rigidity and increasing axial deformations of the pipe, it induces positive arching, thus effectively reducing the axial thrust in the pipe. The result of this sequence is that, despite crimping, the pipe can be in stable condition provided, of course, that the time-dependent foundation settlements have ceased.

If the only sign of distress in a soil-steel structure is crimping limited to a few segments, then in most cases one need not be too concerned about the structural integrity.

Bolt-hole Cracks

Bolt-hole cracks or tears usually occur in longitudinal seams. Since the conduit wall is always subjected to compressive forces, the bolt-hole tears usually do not extend over the entire section of the wall. There are, however, some known cases in which the bolt-hole tears, have extended over larger segments of the conduit wall.

Bolt-hole tears are most common in pipe-arches at the longitudinal seam between the top and side segments of the conduit wall. However, they are also found, very infrequently, in other soil-steel structures. Bolt-hole tears are not always the result of excessive deformation of the conduit wall of the completed structure; they can also be formed during assembly when poorly matching plates are forced to fit at the longitudinal seams.

Reviews of this issue have been conducted and reported on by the Ontario Ministry of Transportation, Alberta Transportation and Utilities / University of Alberta, and the consulting firm of BOWSER-MORNER Associates. All reports conclude that there is a correct and incorrect way of lapping the plates at longitudinal seams.

The correct orientation for longitudinal seam plate lap results in the valley bolt being located closest to the visible plate edge. This is illustrated in Figure 10.1.

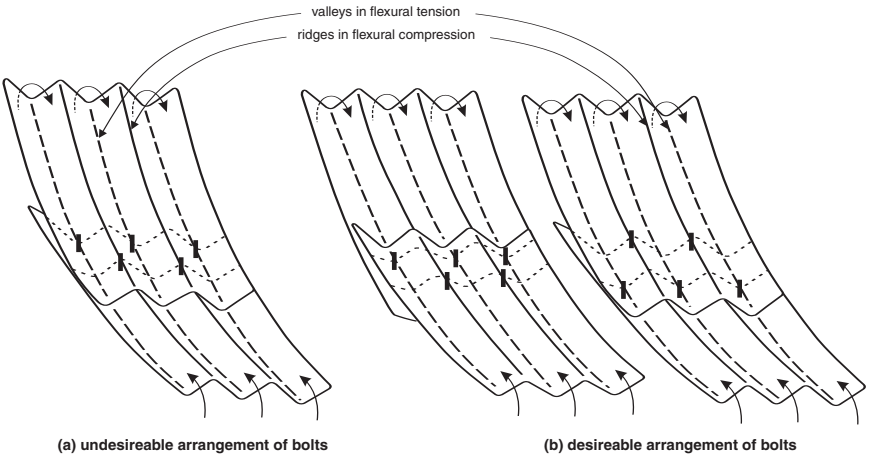

Figure 10.1 (a) Undesirable and (b) desirable arrangement of bolts. (Reproduced from Canadian Journal of Civil Engineering, Volume 15, Number 4, 1988, Pages 587 - 595: Bakht and Agarwal)

It is also suggested that the bolt orientation, in those longitudinal seams of pip-arches susceptible to the tears, had an impact. The recommended bolt orientation for the seam between the top and corner plates is illustrated in Figure 10.2

The BOWSER-MORNER report recommended a procedure for correcting the bolt hole tear phenomenon on those structures on which it has occurred. The procedure is illustrated in Figure 10.3.

Bearing Failure at Longitudinal Seams

Bearing failure at longitudinal seams can take place due to the yielding of the conduit wall directly under the bolts. This form of failure takes place under excessive conduit wall thrust and under conditions that preclude excessive bending deformations.

While the bearing failure of longitudinal seams has been observed in laboratory testing of the strength of bolted joints, it is extremely rare to find it in practice.

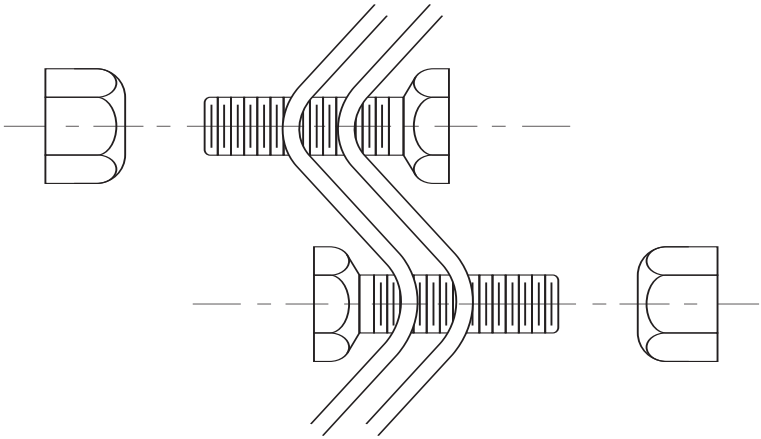

Figure 10.2 Bolt orientation.

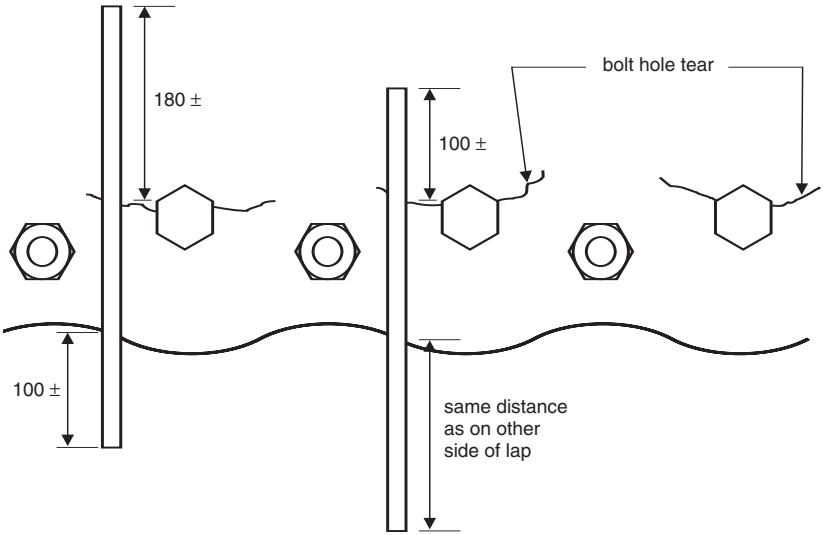

NOTE: GENERALLY A BAR LENGTH OF 380 WILL BE SATISFACTORY. USE 15m BAR

Figure 10.3 Procedure for correcting bolt hole cracking.

Excessive Deformation

Excessive deformations of the conduit wall are caused by the inability of the backfill to restrain its movement. Excessive pipe deformations do not always develop after the structure has been built. Because of its flexibility, the pipe can deform excessively during the initial stages of the backfilling operation. If such deformation is not prevented or corrected during construction, the structure is built with deformed pipe. Pipe deformations locked in during construction may not be detrimental to the structural integrity of the structure, especially if they have stabilized. Pipe

deformation occurring after the completion of the structure may, on the other hand, be a warning signal for the imminent collapse of the structure.

It is very important that a record of the as-built conduit shape be kept so that it can be ascertained later whether the observed deformation occurred recently or has been there since the construction of the structure. When the records of the as-built structure are not available, it is important to record the changes in the conduit shape at regular intervals after the deformations were first noticed. If the deformations are not significant and have not undergone significant changes, then it is likely that the structure is safe.

Lifting of the Invert

In soil-metal structures with large radius or flat invert plates the pressure under the corners is much greater than under the invert plates. If the foundation has inadequate bearing capacity the structure settles more under the haunches than under the invert. This results in a loss of waterway area and also may cause the eventual collapse of the structure.

Lifting of the Pipe Ends

Another form of distress commonly found in soil-steel bridges occurs in structures in which water flows through the conduit. This kind of distress is caused by a combination of uneven settlement of the pipe foundation along its length and buoyancy effects.

Distortion of Bevelled Ends

Bevelled ends are particularly vulnerable to damage by horizontal pressures. A complete pipe, because of having a closed section, can sustain much higher intensities of the lateral pressure than an incomplete ring. Lacking a closed section, the bevelled ends of a pipe are prone to damage by heavy equipment pieces falling on them or by lateral earth pressures. These ends should be tied back into the fill.

MAINTENANCE

Various types of equipment are available commercially for maintenance of drainage structures. The mobility of such equipment varies with the particular application and the equipment versatility. The most frequently used equipment and techniques are listed below.

Vacuum Pumps

This device is normally used to remove sediment from sumps and pipes and is generally mounted on a vehicle. It usually requires a 900 to 1350 litre holding tank and a vacuum pump that has a 250 mm diameter flexible hose with a serrated metal end for breaking up caked sediment. A two man crew can clean a catch basin in 5 to 10 minutes. This system can remove stones, bricks, leaves, litter, and sediment deposits. Normal working depth is up to 6 m.

Waterjet Spray

This equipment is generally mounted on a self-contained vehicle with a high pressure pump and a 900 to 1350 litre water supply. A 75 mm flexible hose line with a metal nozzle that directs jets of water out in front is used to loosen debris in pipes or trenches. The nozzle can also emit umbrella-like jets of water at a reverse angle, which propels the nozzle forward as well as blasting debris backwards toward the catch basin. As the hose line is reeled in, the jetting action forces all debris to the catch basin where it is removed by the vacuum pump equipment. The normal length

of hose is approximately 60 m. Because of the energy supplied from the waterjet, this method should not be used to clean trench walls that are subject to erosion.

Bucket Line

Bucket lines are used to remove sediment and debris from large pipes or trenches (over 1200 mm diameter or width). This equipment is the most commonly available type. The machine employs a gasoline engine driven winch drum, capable of holding 300 m of 12 mm wire cable. A clutch and transmission assembly permits the drum to revolve in a forward or reverse direction, or to run free. The bucket is elongated, with a clam shell type bottom which opens to allow the material to be dumped after removal.

Buckets of various sizes are available. The machines are trailer-mounted usually with three wheels, and are moved in tandem from site to site. When a length of pipe or trench is to be cleaned, two machines are used. The machines are set up over adjacent manholes. The bucket is secured to the cable from each machine and is pulled back and forth through the section until the system is clean. Generally, the bucket travels in the direction for the flow and every time the bucket comes to the downstream manhole, it is brought to the surface and emptied.

Fire Hose Flushing

This equipment consists of various fittings that can be placed on the end of a fire hose such as rotating nozzles, rotating cutters, etc. When this equipment is dragged through a pipe, it can be effective in removing light material from walls. Water can be supplied from either a hydrant or a truck.

Sewer Jet Flushers

The machine is typically truck-mounted and consists of a large watertank of at least 4500 litres, a triple action water pump capable of producing 6900 kPa or more pressure, a gasoline motor to run the pump, a hose reel large enough for 150 m of 25 mm inside diameter high pressure hose and a hydraulic pump to remove the loose material. In order to clean pipes properly a minimum nozzle pressure of 4100 kPa is usually required. All material is flushed ahead of the nozzle by spray action. This extremely mobile machine can be used for cleaning areas with light grease problems, sand and gravel infiltration, and for general cleaning.

REHABILITATION

Rehabilitation of the infrastructure is a major undertaking now being addressed by federal, provincial, and local governments. While the magnitude of rehabilitation may at times appear enormous, rehabilitation often is very cost effective when compared to the alternative of new construction.

Storm sewers and highway culverts represent a significant portion of the infrastructure. Methods of rehabilitating corrugated steel pipe (CSP) structures can be obtained from the CSP manufacturer. Generally, CSP structures can be rehabilitated to provide a new, complete service life at a fraction of the cost or inconvenience of replacement.

All of the methods described herein require a complete inspection and evaluation of the existing pipe to determine the best choice. With CSP, rehabilitation often requires merely providing a new wear surface in the invert. Typically, structural repair is unnecessary. However, if the pipe is structurally deficient, this does not rule out rehabilitation. Repair methods can be utilized and the structures restored to structural adequacy and then normal rehabilitation procedures performed. Even with 25% metal loss, which occurs long after first perforation, structural factors of safety

are reduced by only 25%. When originally built, CSP storm sewers often provide factors of safety of 4 to 8 - far in excess of that required for prudent design.

This section deals mainly with the rehabilitation of corrugated steel pipe and/or steel structural plate or the use of CSP as a sliplining material.

Methods of Rehabilitation

In-place installation of concrete invert.
Reline existing structure.
- Slip line with slightly smaller diameter pipe or tunnel liner plate
- Inversion lining
- Shotcrete lining
- Cement mortar lining
- Patching

In-Place Installation of Concrete Invert

For larger diameters where it is possible for a person to enter the pipe, a concrete pad may be placed in the invert. Plain troweled concrete may be satisfactory for mild conditions of abrasion and flow. For more severe conditions a reinforced pavement is required.

Figure 10.4 shows one method of reinforcing the pad and typical pad thickness. The final design would be in the control of the engineer and would obviously depend upon the extent of the deterioration of the pipe.

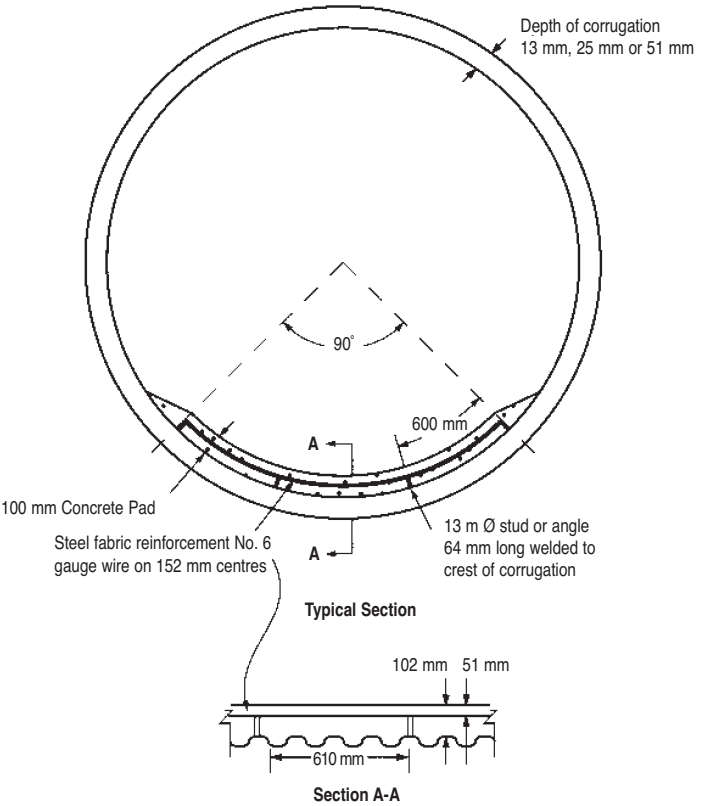

Figure 10.4 In-place installation of concrete invert.

Concrete paved invert.

Relining Materials

The selection of the reline material is dependent upon the conditions of the pipe line to be rehabilitated and the diameter and/or shape.

If the line has deteriorated to the point where it is deficient structurally, the choice would necessarily have to be a material having full barrel cross section with sufficient structural capability to withstand the imposed dead and live loads.

If there is no need to provide structural support, repair of the invert will suffice in most cases.

The following is a discussion of reline materials and methods of installing them. It is the engineer's responsibility to select the material and method of relining dependent upon rehabilitation requirements. Alternate types of materials may be found in ASTM A 849.

Sliplining

If downsizing of the existing line is not a concern, then standard corrugated steel pipe may be used and provided in lengths which would facilitate insertion. A hydraulic advantage may be gained by using helical corrugated steel pipe or spiral rib pipe if the existing pipe is annularly corrugated.

If sufficient clearance exists between the liner pipe and the existing line, the sections may be joined by the use of a threaded rod and lug type coupling band.
An alternative to the use of conventional angles or lugs and bolts is to use sheet metal screws or rivets in conjunction with an installation jig or jack.

Internal Grouting

Another effective method of repairing a conduit with excessive deformations is to place a smaller pipe within the existing one and fill the space between the two pipes with concrete grout. This method of repair, which has been successfully employed in several jurisdictions, is particularly useful when closing the structure for repairs for

Sliplining a concrete culvert with steel pipe.

extended periods is not feasible. It is also an economical solution when the depth of cover over the conduit is large, making the removal of fill for replacement of the damaged segments of the pipe an even more expensive proposition.

Repair by placing a smaller-size pipe inside the existing conduit and internal grouting is feasible for most structures. For this method, a concrete floor or a pair of rails is first installed at the bottom of the existing pipe. The new pipes, are connected outside and pulled through the existing pipe or pulled in individually and connected with internal couplers. The new pipe should be just large enough to fit through the existing pipe with a prescribed gap of 150 mm. The gap between the two pipes can be maintained through strategically located spacers.

The concrete grout is injected in the gap between the two pipes through holes in the pipe located in the shoulder areas as shown in Figure 10.5. After the grout has set, the repaired structure usually becomes much stronger than the original one, and remains virtually free of distress.

Lining a concrete box with a steel box culvert.

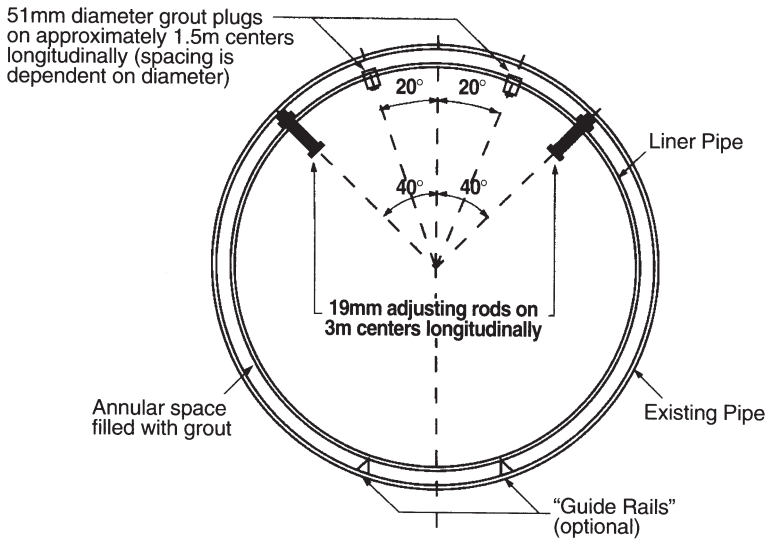

Figure 10.5 Typical section for interim grouting.

For structures having spans greater than about 6 m, the preceding procedure may not be a practical one because of the large size of the internal pipe which must be drawn through the existing one. In such a case, the internal metallic shell can be constructed from steel tunnel liners.

The bottom plates of the liner are first connected to the invert of the existing pipe by means of anchor bolts. A gap of 150 to 200 mm is maintained between the existing pipe and the liner plates through steel chairs welded to the invert.

After the gap between the bottom liner plates and existing invert is grouted, the liner plates are added symmetrically on both sides of the cross section, until the ring in completed by welding the top segments. The liners are provided with holes in the shoulder areas for injection of the grout.

Repair through liner plates permits the removal of locally deformed plates and their replacement by new ones. However, when this operation is undertaken, it is advisable to install complete rings of the liner plates on both sides of the plate to be replaced. Only after the grout between these complete liner rings and the existing pipe has set should an attempt be made to remove the damaged plate. After the damaged plate is removed, a portion of the soil will fall naturally, leaving a cavity behind the location of the removed plate. If the soil does not fall naturally, it should be removed manually to make room for the new plate to be welded in place.

Although not normally practiced, it is advisable to fill with grout the gap that may remain behind the plate that replaces the locally damaged one.

The disadvantage of repair by internal grouting, besides its excessive cost, is the reduction of the conduit size. As noted earlier, the reduction is of particular concern for culverts.

Inversion Lining

Inversion lining is accomplished by using needle felt made from polyester fiber, which serves as the "form" for the liner.

The use of this method requires that the pipe be taken out of service during the rehabilitation period. One side of the felt is coated with a polyurethane membrane and the other is impregnated with thermosetting resin.

The felt variables include denier, density, type of material, method of manufacture (straight or cross lap), and length of fiber. The physical properties of the felt and chemicals must be determined for the specific project and in cooperation with prospective contractors.

The liner expands to fit the existing pipe geometry and therefore is applicable to egg-shaped, ovoids, and arch pipe.

Inversion lining has been utilized on lines from 250 to 2800 mm in diameter. It is normally applicable for distances of less than 60 m or where ground water, soil condition, and existing structures make open excavation hazardous or extremely costly. Inversion lining with water is generally confined to pipelines with diameters less than 1500 mm and distances less than 300 m. Normally air pressure is utilized for inversion technique on larger diameter pipe. Compared with other methods, this process is highly technical. Other technical aspects include resin requirements, which vary with viscosity, felt liner, ambient temperatures, and the filler in the felt content; the effects of ultraviolet light on the resin and catalyst; and safety precautions for personnel and property.

Shotcrete Lining

Shotcrete is a term used to designate pneumatically applied cement plaster or concrete. A gun operated by compressed air is used to apply the cement mixture. The water is added to the dry materials as it passes through the nozzle of the gun. The quantity of water is controlled within certain limits by a valve at the nozzle. Low water ratios are required under ordinary conditions. The cement and aggregate are machine or hand mixed and are then passed through a sieve to remove lumps too large for the gun.

When properly made and applied, shotcrete is extremely strong, dense concrete, and resistant to weathering and chemical attack. Compared with hand placed mortar, shotcrete of equivalent aggregate-cement proportions usually is stronger because it permits placement with lower water-to-cement ratios. For relining existing structures, the shotcrete should be from 50 to 100 mm thick depending on conditions and may not need to be steel reinforced. If used, the cross-sectional area of reinforcement should be at least 0.4% of the area of the lining in each direction.

Shotcreting with a steel-fiber-reinforced concrete mix has been used successfully to line the inside of soil-steel bridges in distress. The lining, which is up to 150 mm thick, may cover the complete perimeter of the cross section of the conduit. Alternatively, it may be limited to the damaged zone of the conduit wall.

When shotcreting is used for the complete ring, shear connectors are not usually provided between the conduit wall and the shotcrete. However, their inclusion can certainly increase the strength and stiffness of the additional ring.

The partial shotcrete ring is provided to repair localized damage, such as section containing bolt-hole tears. For the partial ring, it is important to provide some sort of shear connection between the pipe and shotcrete. This shear connection may be by shear studs of the type used in composite beams, machine-welded to the pipe after the zinc coating from the galvanized plate has been ground off locally. An alternative to the usual shear stud is a U-shaped bracket which is made out of thin steel plates, and which is attached to the pipe through pins fired by a ram-setting gun. This type of shear connector has been used successfully in several repair works.

Despite the ability of the fiber-reinforced concrete to sustain fairly large tensile stresses, it is advisable to add a steel reinforcement mesh to the shotcrete ring, especially if it is partial. The location of the reinforcement mesh within the depth of the shotcrete ring depends on the sign of the moments that the repair segment of the conduit wall is subjected to. For example, the segment in the vicinity of the crown is subjected to moments causing tension towards the inside of the conduit. For this case, the reinforcement layer should be close to the exposed face of the shotcrete. On the other hand, the reinforcement mesh should be close to the conduit wall if the segment under repair is in the haunch area of the conduit. It is recalled that, for this segment, the bending moments induce tension toward the outside of the conduit.

Repair by fiber-reinforced shotcrete can prove economical and effective in many cases mainly because of the fact that it requires no formwork and little preparatory work. Because of its relatively thin layer, the shotcrete ring does not reduce the conduit size appreciably. The repair work by shotcreting can be undertaken even in cold weather, provided that the conduit wall sections to be shotcreted are adequately heated. If only the top and side segments are to be repaired, then shotcreting of culverts can be carried out without diverting the stream.

The following specifications should be considered:

1. "Specifications for Concrete Aggregates" ASTM C 33.
2. "Specifications for Materials, Proportioning and Application of Shotcrete" ACI 506.
3. "Specifications for Chemical Admixtures for Concrete" ASTM C 494.

Cement Mortar Lining

Cement mortar lining is particularly well suited to small diameter pipe which is not easily accessible.

The cement mortar lining is applied in such a manner as to obtain a one-half inch minimum thickness over the top of the corrugations. Application operations should be performed in an uninterrupted manner. The most common practice uses a centrifugal machine capable of projecting the mortar against the wall of the pipe without rebound, but with sufficient velocity to cause the mortar to be densely packed in-place. See Figure 10.6 which shows a typical setup for this process.

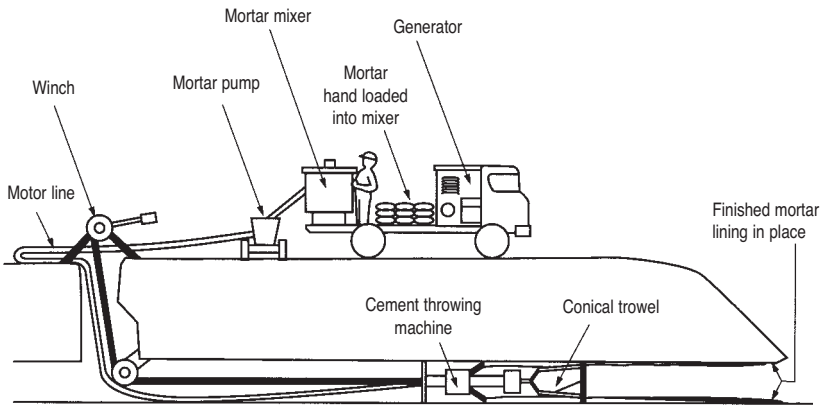

Figure 10.6 Cement mortar lining.

Patching

Numerous polymer and concrete patching compounds are commercially available for the repair of damaged materials and coatings. Patches fabricated of similar corrugated steel material can be attached mechanically or by welding over the damaged area.

Temporary props

One of the most effective and expedient measures to ensure that excessive deformations of the pipe do not degenerate into sudden collapse is the provision of temporary struts or props in the conduit. These props can be timber columns of about 200 x 200 mm cross section, or steel struts of hollow circular section of the kind used in construction formwork. The props are located in the conduit under the crown and are provided with longitudinal sills above and under them. The sills, which run along the conduit length, are of timber. When the sides of the conduit cross section are also excessively deformed, the vertical props are supplemented with horizontal supports.

The main advantage of vertical props is that they can prevent a catastrophic failure of the structure; the main disadvantage is that they constrict the conduit. This disadvantage can be particularly significant for culverts.

The props should be designed to carry, with an adequate margin of safety, the weight of that volume of soil which is statically apportioned to them by assuming the propped cross section will act as a two-span continuous beam.

The props are usually spaced at 1.0 to 1.5 meters. The butt joints of the top and bottom sills should be staggered so that they do not occur at the same location along the pipe. The sills should be long enough to contain at least two props. Screws for adjusting the lengths of these props are very effective in ensuring that the contact between the supports and the pipe is not loose.

Partial Concreting Inside Conduit

As discussed earlier, the most common form of distress in soil-steel structures, especially pipe-arches, is the occurrence of bolt-hole tears in longitudinal seams close to the invert. This form of distress indicates the presence of relatively loose fill behind the haunch areas. Accordingly, the most appropriated means of repair appears to be one which includes consolidation of the loose fill by some technique.

Unfortunately, a technique for consolidating the loose fill behind the haunches has not yet been proven by field application. In the absence of such a technique, the next best repair method appears to be one in which the conduit wall is not only reinforced to transmit shear at the section containing bolt-hole tears, but is also made flexurally very stiff at haunches. This can be achieved by partial concreting of the inside of the conduit at the haunches.

Effective contact between the conduit wall and concrete can be provided through shear studs which are machine-welded to the pipe after grinding off locally the zinc coating of the galvanized plate. As will be discussed later in the section, shear studs can also be installed on the outside of the conduit.

It can be appreciated that at the haunches the conduit wall has a tendency to bend in such a way that tension occurs towards the outside of the conduit. Except in the vicinity of the bolt-hole tears, the conduit wall itself can sustain the tensile forces. However, in the vicinity of bolt-hole tears, a reinforcing mesh should be provided close to the conduit wall. It should be noted that this reinforcing mesh should not only sustain the tensile forces resulting from subsequent excessive bending of the wall, but be capable of transmitting the shear forces acting on the wall at the location of bolt-hole tears.

The concrete can be cast in two lifts. For the first lift, it can be poured up to the horizontal construction joint. The second lift, requiring nearly vertical shuttering, can be cast later. Alternatively, and more effectively, the concrete in the haunch areas can be applied through shotcreting.

Another method of partial concreting extends the concrete at the two haunches to cover the invert as well. This form of repair is particularly useful for those pipe-arches which suffer not only from bolt-hole tears, but also from minor invert uplift. The concrete in the invert area should be provided with a reinforcement mesh close to the top surface of the concrete, to sustain tension arising from further uplift of the invert. It can be appreciated that this repair technique may not be suitable if the invert uplift is excessive.

The significant disadvantage of the foregoing repair techniques is the reduction of the conduit size; this may be particularly undesirable in the case of culverts. It is noted, however, that this reduction is much smaller if the concreting is limited to haunches.

Partial Concreting Outside Conduit

When distress in the conduit wall is limited to only the top segments of the pipe and the depth of cover is shallow, removal of the backfill from above the conduit and adding a layer of concrete to the outside of the pipe may prove to be an economically viable repair method. In this method, the concrete layer is made composite with the pipe through the usual shear studs employed in slab-on-girder-type bridges. These shear studs can be machine-welded readily to the pipe after locally scraping off the zinc layer. The shear studs are staggered for maximum efficiency.

BIBLIOGRAPHY

Anon, *Sewer Maintenance Manual*, prepared by Municipal Engineers Association of Ontario for Ministry of the Environment, Ontario, Canada, March 1974.

ASTM, "Standard Specification for Post-Applied Coatings and Linings for Corrugated Steel Sewer and Drainage Pipe," A849, *Annual Book of Standards*, Vol. 01.06, American Society for Testing and Materials, 100 Barr Harbor Drive, PO Box C700, West Conshohocken, PA 19428-2959.

ASTM, "Standard Specification for Concrete Pavements and Linings Installed in Corrugated Steel Structures in the Field," A979/A979M, *Annual Book of Standards*, Vol. 01.06, American Society for Testing and Materials, 100 Barr Harbor Drive, PO Box C700, West Conshohocken, PA 19428-2959.

NCSPA, "CSP Durability Guide," National Corrugated Steel Pipe Association, Washington, D.C., May 2000.

NCSPA, "Rehabilitation of Corrugated Steel Pipe and Pipelines of Other Materials," Drainage Technology Bulletin, National Corrugated Steel Pipe Association, Washington, D.C., September 1988.

Smith, T. W., Peter, R.R., Smith, R.E., and Shirley, E.C., "Infiltration Drainage of Highway Surface Water," Research Report M&R 632820-1, Transportation Laboratory, California Department of Transportation, August 1969.

CHAPTER 11

TUNNEL LINER PLATE

INTRODUCTION

The open-trench method of placing underground conduits is commonly used on new construction of culverts, sewers and underpasses. Interference with traffic, as well as inconvenience to and disruption of business or industry, is an undesirable and costly consequence of open-trench construction. Tunneling is a practical alternative.

Over 50 years of field experience with strong, lightweight steel liner plates has popularized the tunneling method of construction. These plates, along with modern excavating and material handling equipment, and increasing knowledge of effective soil stabilization techniques, have led to many thousands of feet of small tunneling projects completed each year.

Compared to open trench installations, tunneling with steel liner plates results in less excavation and less backfilling. Expensive pavements and utilities need not be removed and replaced. The cost associated with future maintenance, resulting from street or track settlement, can be avoided.

Liner plate tunnel entrance.

GENERAL APPLICATIONS

Uses of steel liner plates include conduits under railways, highways and streets. These conduits are used as culverts, storm drains, sanitary sewers, and as underpasses for pedestrians, livestock, aggregate conveyors, utility lines, and vehicles. Other applications are: lining failing masonry and concrete structures such as culverts and sewers; highway and railway tunnels; mine and sewer entry shafts; utility tunnels; and foundation caissons for bridges and buildings.

Liner plates may act as a temporary or secondary liner to be lined by other materials. They also serve alone as the permanent or primary liner; as the conduit itself. Installation and assembly can be done entirely from inside a liner plate structure.

Non-tunneling uses of steel liner plates include storage bins, surge tanks and small retaining walls.

Twin lining.

DESIGN

The following is based on Section l6 Steel Tunnel Liner Plates taken from the AASHTO Standard Specifications for Highway Bridges. A significant number of editorial revisions have been made to reflect Canadian standard practice. The article numbers have therefore been revised to avoid confusing the text presented here with the AASHTO Standard.

1 GENERAL AND NOTATIONS

1.1 General

1.1.1 These criteria cover the design of cold-formed panel steel tunnel liner plates. The minimum thickness shall be as determined by design in accordance with Articles 2, 3, 4, 5, and 6 and the construction shall

conform to the AASHTO Standard Specifications for Highway Bridges, Section 26-Division II. The supporting capacity of a nonrigid tunnel lining such as a steel liner plate results from its ability to deflect under load, so that side restraint developed by the lateral resistance of the soil constrains further deflection. Deflection thus tends to equalize radial pressures and to load the tunnel liner as a compression ring.

1.1.2 The load to be carried by the tunnel liner is a function of the type of soil. In a granular soil, with little or no cohesion, the load is a function of the angle of internal friction of the soil and the diameter of the tunnel being constructed. In cohesive soils such as clays and silty clays the load to be carried by the tunnel liner is dependent on the shearing strength of the soil above the roof of the tunnel.

1.1.3 A subsurface exploration program and appropriate soil tests should be performed at each installation before undertaking a design.

1.1.4 Nothing included in this section shall be interpreted as prohibiting the use of new developments where usefulness can be substantiated.

1.2 Notations

A = cross-sectional area of liner plates (Article 3.4)
C_d = coefficient for tunnel liner, used in Marston's formula (Article 2.4)
D = horizontal diameter or span of the tunnel (Article 2.4)
D_c = critical diameter (Article 3.4)
E = modulus of elasticity (Article 3.3)
FS = factor of safety for buckling (Article 3.4)
f_c = buckling stress (Article 3.4)
f_u = minimum specified tensile strength (Article 3.4)
H = height of soil over the top of the tunnel (Article 2.4)
I = moment of inertia (Article 3.3)
k = parameter dependent on the value of the friction angle (Article 3.4)
P = external load on tunnel liner (Article 2.1)
P_d = vertical load at the level of the top of the tunnel liner due to dead load (Article 2.1)
P_l = vertical load at the level of the top of the tunnel liner due to live load (Article 2.1)
r = radius of gyration (Article 3.4)
T = thrust per unit length (Article 3.2)
T_{max} = maximum allowable thrust (Article 3.4)
W = total (moist) unit weight of soil (Article 2.4)
$ø$ = friction angle of soil (Article 3.4.1)

2 LOADS

2.1 External load on a circular tunnel liner made up of tunnel liner plates may be predicted by various methods including actual tests. In cases where more precise methods of analysis are not employed, the external load P can be predicted by the following:

(a) If the grouting pressure is greater than the computed external load, the external load P on the tunnel liner shall be the grouting pressure.

(b) In general the external load can be computed by the formula

$$P = P_1 + P_d$$

where: P = the external load on the tunnel liner, kPa
P_1 = the vertical load at the level of the top of the tunnel liner due to live loads, kPa
P_d = the vertical load at the level of the top of the tunnel liner due to dead load, kPa.

2.2 For an H-20 load, values of P_1 are approximately the following:

H (m)	1.00	1.25	1.50	1.75	2.00	2.25	2.50	2.75	3.00
P_1 (kPa)	25.0	17.3	12.8	9.9	7.7	6.0	5.0	4.2	3.6

For an E-80* load, values of P_1 are approximately the following:

H (m)	1.00	1.20	1.50	2.00	3.00	4.00	6.00	8.00	10.00
P_1 (kPa)	147.0	133.0	115.0	91.0	53.0	34.0	15.0	7.0	3.0

* AREMA Manual for Railway Engineering, Chapter 1.

2.3 Values of P_d may be calculated using Marston's formula for load or any other suitable method.

2.4 In the absence of adequate borings and soil tests, the full overburden height should be the basis for P_d in the tunnel liner plate design.

The following is one form of Marston's formula:

$$P_d = C_d W D$$

where: C_d = coefficient for tunnel liner, Figure 11.1
W = total (moist) unit weight of soil, kN/m^3
D = horizontal diameter or span of the tunnel, m
H = height of soil over the top of the tunnel, m

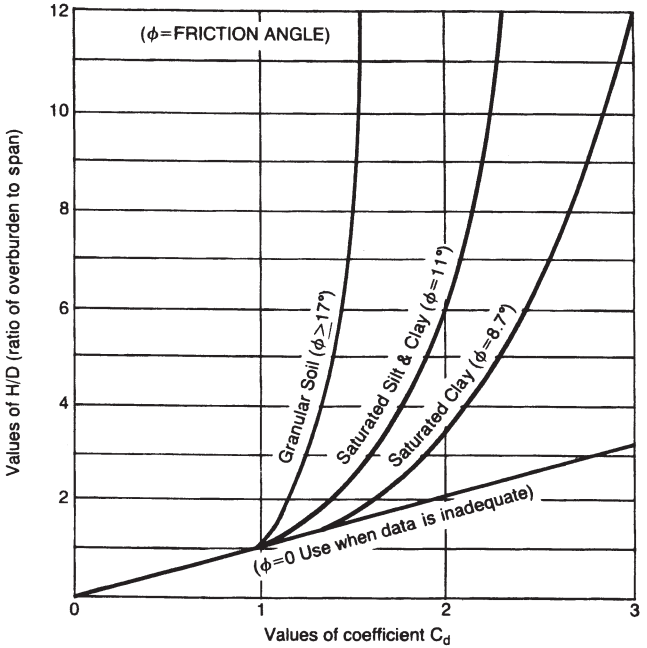

Figure 11.1 Diagram for coefficient C_d for tunnels in soil.

3 DESIGN

3.1 Criteria

The following criteria must be considered in the design of liner plates:

(a) Joint strength.
(b) Minimum stiffness for installation.
(c) Critical buckling of liner plate wall.
(d) Deflection or flattening of tunnel section.

3.2 Joint Strength

3.2.1 The seam strength of liner plates must be sufficient to withstand the thrust developed from the total load supported by the liner plate. This thrust, T, in kN/m is:

$$T = PD/2$$

where: P = load as defined in Article 2, kPa;
D = diameter or span, m.

3.2.2 The ultimate design longitudinal seam strengths are shown in Table 11.1.

3.2.3 The thrust, T, multiplied by the safety factor, should not exceed the ultimate seam strength.

3.3 Minimum Stiffness for Installation

3.3.1 The liner plate ring shall have enough rigidity to resist the unbalanced loads of normal construction: grouting pressure, local slough-ins, and miscellaneous concentrated loads.

The minimum stiffness required for these loads can be expressed for convenience by the formula below. It must be recognized, however, that the limiting values given here are only recommended minima. Actual job conditions may require higher values (greater effective stiffness). Final determination of this factor should be based on intimate knowledge of the project and practical experience.

3.3.2 The stiffness for installation is determined by the formula:

$$\text{Stiffness} = EI/D^2$$

where:
- D = diameter, mm
- E = modulus of elasticity, MPa (200,000)
- I = moment of inertia, mm^4/mm

The required minimum stiffness based on 2-flange liner plates is

$$(EI/D^2) \geq 8.76$$

3.4 Critical Buckling of Liner Plate Wall

3.4.1 Wall buckling stresses are determined from the following formulae:

For diameters less than D_c, the ring compression stress at which buckling becomes critical is:

$$f_c = f_u - \left[\frac{f_u^2}{48E} \times \left(\frac{kD}{r} \right)^2 \right] \text{, MPa}$$

For diameters greater than D_c:

$$f_c = \frac{12E}{\left(\frac{kD}{r} \right)^2} \text{, MPa}$$

where:
- $D_c = \frac{r}{k} \sqrt{\frac{24E}{f_u}}$ = critical diameter, mm
- f_u = minimum specified tensile strength, MPa
- f_c = buckling stress in MPa, not to exceed minimum specified yield strength
- D = pipe diameter, mm
- r = radius of gyration of section in mm
- E = modulus of elasticity, MPa

The parameter k will vary from 0.22 for soils with ø >15˚ to 0.44 for soils with ø <15˚.

3.4.2 Design for buckling is accomplished by limiting the ring compression thrust T to the buckling stress multiplied by the effective cross-sectional area of the liner plate divided by the factor of safety.

$$T_{max} = \frac{f_c A}{FS}$$

where: T_{max} = maximum allowable thrust, kN/m
A = effective cross-sectional area of the liner plate, mm^2/mm
FS = factor of safety for buckling

3.5 Deflection or Flattening

3.5.1 Deflection of a tunnel depends significantly on the amount of over-excavation of the bore and is affected by delay in backpacking or inadequate backpacking. The magnitude of deflection is not primarily a function of soil modulus or the liner plate properties, so it cannot be computed with usual deflection formulae.

3.5.2 Where the tunnel clearances are important, the designer should oversize the structure to provide for a normal deflection. Good construction methods should result in deflections of not more than 3 percent of the normal diameter.

4 CHEMICAL AND MECHANICAL REQUIREMENTS

4.1 Chemical Composition

Base metal shall conform to ASTM A 569.

4.2 Minimum Mechanical Properties of Flat Plate before Cold Forming

Tensile strength	=	290 MPa
Yield strength	=	195 MPa
Elongation, 50 mm	=	30 percent

4.3 Dimensions and Tolerances

Nominal plate dimensions shall provide the section properties shown in Article 5. Thickness tolerances shall conform to Paragraph 14 of AASHTO M 167.

5 SECTION PROPERTIES

The section properties, based on the average of one ring of liner plates, shall conform to those shown in Table 11.2.

6 COATINGS

Steel tunnel liner plates shall be of heavier gage or thickness or protected by coatings or other means when required for resistance to abrasion or corrosion.

7 BOLTS

7.1 Bolts and nuts used with lapped seams shall be not less than 16 mm in diameter. The bolts shall conform to the specifications of ASTM A 449 for plate thickness equal to or greater than 5.0 mm and A 307 for plate thickness less than 5.0 mm. The nut shall conform to ASTM A 563, Grade A.

8 SAFETY FACTORS

Longitudinal seam strength	= 3
Pipe wall buckling	= 2

DESIGN CONSIDERATIONS

The AASHTO specification provides a design to carry the final loads on the steel liner. While the design follows conventional ring compression theory, actual soil loads depend on the bridging characteristics of the soil as well as the diameter and depth of the tunnel. Soil loads for tunneling conditions are typically much lower than for cut and cover conditions, and can be determined using Marston loading theory based on the friction angle ø, or shear strength, of the soil (Article 2.4). Sufficient subsurface investigation is necessary to determine actual soil conditions and to ensure adequate depth for soil bridging in shallow tunnels.

Liner plates are typically backgrouted, or backpacked with granular materials, to fill the overbore. These materials provide buckling support for the steel liner plate and help to ensure a more even distribution of the loads.

While attention is directed to the final loads for design, construction loads are often the controlling factor. Unbalanced loads due to possible soil sloughing or rock falls, especially in soft ground or hand mined conditions and before the liner is complete or backgrouted, can control the liner plate thickness.

During this period the liner plate ring stiffness and bending strength are a prime consideration. The minimum AASHTO stiffness value provides for adequate assembly (Article 3.3.2). No specific minimum factor of safety has been established for stiffness (Article 8), but rather the allowable or minimum stiffness is based on experience. Final determination of the minimum required stiffness (Article 3.3.1) should be based on in depth knowledge of the project, ground conditions, experience and tunneling techniques.

The material mechanical requirements listed in the specification (Article 4.2) are for virgin material prior to cold forming. The typical values used for design, which reflect the cold work of forming, are:

f_y = minimum specified yield strength = 230 MPa

f_u = minimum specified tensile strength = 310 MPa

Four radius liner plate shape for lining an old concrete shape.

PRODUCT DETAILS

Two-flange liner plates are supplied with deep corrugations running through lapped end joints (Figure 11.2). The ultimate longitudinal seam strengths are shown in Table 11.1. Dimensions, physical properties and thicknesses are given in Table 11.2. These section properties are reproduced from the manufacturer's data.

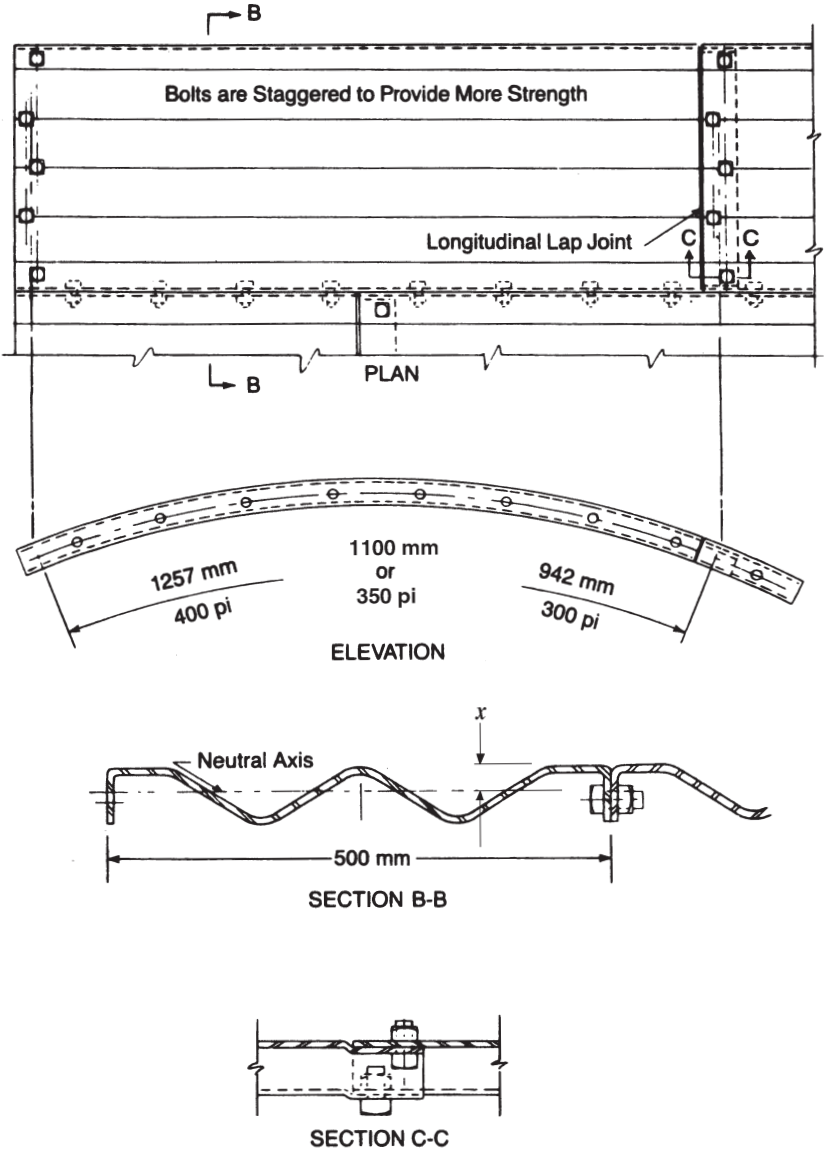

Figure 11.2 Details of 2-flange liner plate.

Table 11.1 Ultimate longitudinal seam strength of liner plates

Plate Thickness	Ultimate Strength
mm	kN/m
3.0	497
4.0	802
5.0	1117
6.0	1246

Table 11.2 Sectional properties and weights of 2-Flange lap-joint steel liner plates

Uncoated Thickness T mm	Area of Section A mm^2/mm	Moment of inertia I mm^4/mm	Section Modulus S mm^3/mm		Radius of Gyration r mm	Neutral Axis to Outer Face x mm	Approximate Plate Weights Including Bolts, kg		
			Outer	Inner			300 Pi mm Plate	350 Pi mm Plate	400 Pi mm Plate
3.0	3.522	1198.77	52.32	37.42	17.84	22.910	15.73	18.13	20.53
4.0	4.776	1634.48	69.39	50.38	17.89	23.556	20.98	24.18	27.37
5.0	5.970	2054.55	85.00	62.58	17.94	24.172	26.22	30.22	34.21
6.0	7.164	2480.01	100.04	74.67	18.00	24.789	31.46	36.26	41.05

Liner plate shaft construction.

INSTALLATION NOTES

Steel liner plates are installed to support the soil exposed by tunneling operations. The outside shape of the liner plates should fit closely to the excavated opening.

Where too much soil is removed, the annular space between the plates and the soil should be backfilled promptly or temporary supports should be used and the

space should be grouted. When soil conditions are such that the soil may slough or rock falls are possible prior to grouting, a liner plate thickness must be selected to support these loads with an adequate factor of safety on bending stiffness. Backfill may consist of pneumatically placed pea gravel, lean grout, sand, or other suitable material.

Some of the liner plates should be provided with grout holes. A sufficient number should be installed so that grouting can be done effectively at various locations around the liner periphery. Grout or backfill should be kept as close to the tunnel face as possible. When grout is used for backfill, it should be injected in lower holes first, followed by higher holes as the space is filled. Plugs, preferably threaded, should be installed in holes after their use.

With extremely heavy loads, or a tunnel or shaft too large for practical use of liner plates alone, reinforcing I-Beam rings may be used. In unstable soils, where the soil will not remain in place long enough to excavate for a liner plate, the soil can be controlled with steel poling plates, wood spiling boards, or a shield and breast boards at the tunnel face. Chemical stabilization of the soil is also practical in some cases. Tunneling machines are useful for long tunnels in uniform soils.

Liner plate shaft construction.

CAISSON DESIGN

The load to be carried by a caisson may be computed by known methods. The horizontal pressure at a specified depth is determined and multiplied by one-half the caisson diameter.

Estimated unit pressures for some soils are shown in Figure 11.3. These equivalent fluid pressures assume that pressure increases uniformly with depth and have been calculated using typical properties for the type of soil described. Actual pressures on the backfilled caisson will vary from those in Figure 11.3 depending on the actual soil properties. Unbalanced loads, due to soil sloughing prior to backfill, may result in the critical design loading. In that case, an adequate factor of safety on bending stiffness must be used.

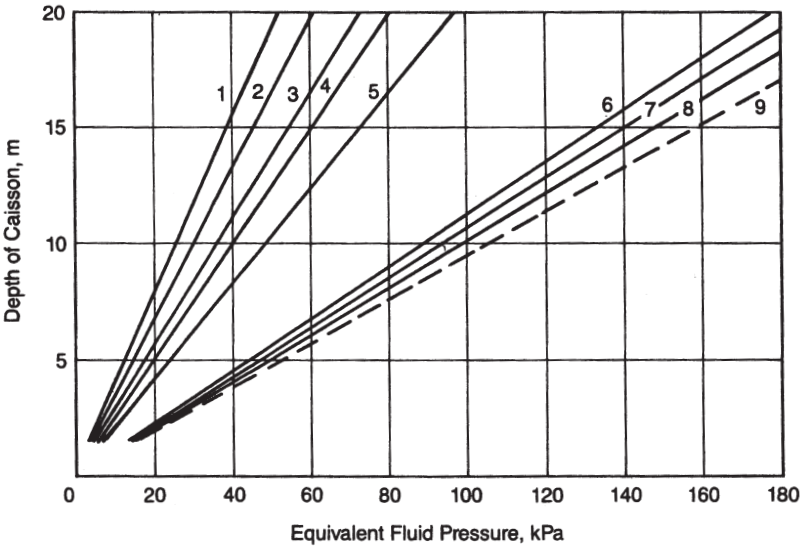

1) Clay: Lumpy and dry
   Earth: Loose and either dry or slightly moist
2) Earth: Fairly moist and packed
3) Earth: Perfectly dry and packed
4) Clay, sand and gravel mixture
5) Drained river sand
6) Earth: Soft flowing mud
7) Clay: Damp and plastic
8) Earth: Soft, packed mud
9) Hydrostatic pressure of water

Figure 11.3 Equivalent fluid pressure for caisson construction.

Example

Soil: Damp plastic clay
Depth of caisson: 10 m
Diameter of caisson: 6 m

From the graph (Figure 11.3, curve 7) the equivalent fluid pressure is 94 kPa. The resulting thrust is given by:

$$T = \frac{PD}{2} = \frac{94\,(6)}{2} = 282 \text{ kN/m}$$

The ultimate longitudinal seam strength for 5.0 mm thick plates is 1117 kN/m. The resulting factor of safety is:

$$FS = \frac{1117}{282} = 3.96$$

Since this is greater than the required 3.0, the 5.0 mm thick plate meets the seam strength requirement.

For the caisson, the critical diameter is:

$$D_c = \frac{r}{k}\sqrt{\frac{24\,E}{f_u}} = \frac{17.94}{0.44}\sqrt{\frac{24(200\,000)}{310}} = 5074 \text{ mm}$$

Since the diameter of the caisson is larger than the critical diameter, the buckling stress is:

$$f_c = \frac{12\,E}{\left(\frac{kD}{r}\right)^2} = \frac{12\,(200\,000)}{\left[\frac{0.44\,(6\,000)}{17.94}\right]^2} = 110.8 \text{ MPa}$$

The maximum allowable thrust is:

$$T_{max} = \frac{f_c A}{FS} = \frac{110.8\,(5.970)}{2} = 330.7 \text{ kN/m}$$

Since this is greater than the calculated thrust, the caisson will resist buckling.

The stiffness of the caisson is given by:

$$\frac{EI}{D^2} = \frac{200\,000(2054.55)}{(6000)^2} = 11.41$$

Since this is greater than the minimum requirement described in 3.3.2, the installation stiffness requirement is satisfied.

BIBLIOGRAPHY

AASHTO, *LRFD Bridge Design Specifications,* American Association of State Highway and Transportation Officials, 444 N. Capitol St. N.W., Ste 249, Washington, D.C. 20001.

AASHTO, *Standard Specifications for Highway Bridges*, American Association of State Highway and Transportation Officials, 444 N. Capitol St. N.W., Ste 249, Washington, D.C. 20001.

CHAPTER 12

GUIDERAILS

INTRODUCTION

The general intent of the highway engineer is to design a roadway in which the geometry creates a safe driving environment that does not require guiderail or median barriers. Unfortunately, certain limitations are placed on this objective, even in new construction. Site conditions, economics and other considerations may make the use of guiderails the best answer to the safety problem.

DESIGN PURPOSE

The purpose of guiderails and median barriers is to make highways safer by reducing accident severity. To accomplish this objective, systems are designed to:

1) Reduce errant vehicle penetration.
2) Redirect errant vehicles in a direction parallel to traffic flow.
3) Minimize the hazard to the vehicle occupants during collision.

In addition to the basic objective, guiderail and median barrier systems should have certain desirable performance characteristics. These can be summarized as follows:

1) Minimize vehicle damage so that the automobile can be maneuvered after collision.
2) Be resistive to collision damage.
3) Be economical in construction, installation and maintenance.
4) Have a pleasing, functional appearance.

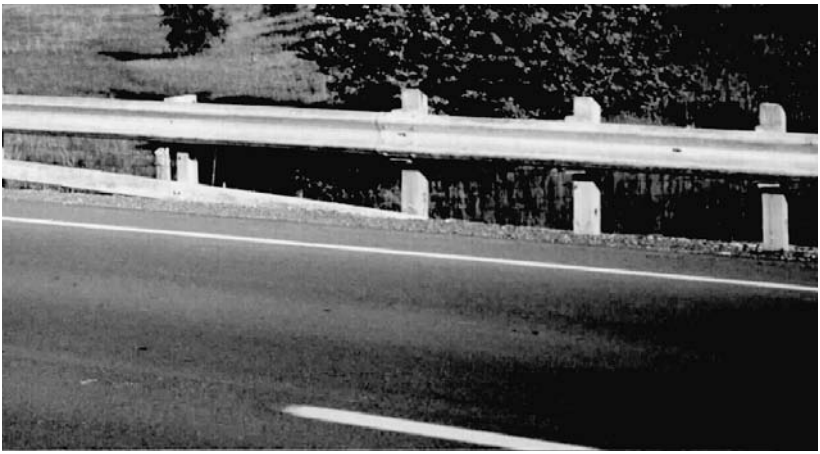

Transition of rub-rail channel with W-beam guiderail system.

Table 12.1 Barrier warrants for nontraversable terrain and roadside obstacles*,†

Bridge piers, abutments, and railing ends	Shielding generally required
Boulders	A judgement decision based on nature of fixed object and likelihood of impact
Culverts, pipes, headwalls	A judgement decision based on size, shape, and location of obstacle
Cut slopes (smooth)	Shielding not generally required
Cut slopes (rough)	A judgement decision based on likelihood of impact
Ditches (parallel)	Varies with slope
Ditches (transverse)	Shielding generally required if likelihood of head-on impact is high
Embankment	A judgement decision based on fill height and slope
Retaining walls	A judgement decision based on relative smoothness of wall and anticipated maximum angle of impact
Sign and luminaire supports††	Shielding generally required for nonbreakaway supports
Traffic signal supports §	Isolated traffic signals within clear zone on high-speed rural facilities may warrant shielding
Trees	A judgement decision based on site-specific circumstances
Utility poles	Shielding may be warranted on a case-by-case basis
Permanent bodies of water	A judgement decision based on location and depth of water and likelihood of encroachment

* Shielding nontraversable terrain or a roadside obstacle is usually warranted only when it is within the clear zone and cannot practically or economically be removed, relocated, or made breakaway and it is determined that the barrier provides a safety improvement over the unshielded condition.

† Marginal situations, with respect to placement or omission of a barrier, will usually be decided by accident experience, either at the site or at a comparable site.

†† Where feasible, all sign and luminaire supports should be breakaway design regardless of their distance from the roadway if there is reasonable likelihood of their being hit by an errant motorist.

§ In practice, relatively few traffic signal supports, including flashing light signals and gates used at railroad crossings are shielded. If shielding is deemed necessary, however, crash cushions are sometimes used in lieu of a longitudinal barrier installation.

Source: Adapted from *Roadside Design Guide,* AASHTO, Washington, D.C., 1996.

RESEARCH AND TECHNOLOGY

A number of provinces and states in North America, as well as other agencies (domestic and foreign) have tested guiderail and bridge rail systems. These include components of steel, wood, concrete and aluminum. Pioneer work was done by General Motors Proving Ground, with subsequent research by the state highway departments of California and New York, Texas Transportation Institute, the Cornell Aeronautical Laboratory (now Calspan) and the Southwest Research Institute.

From this continuing research and development of improved components have evolved three basic systems characterized by their deflection response. These are:

1. *Rigid.* These barriers do not deflect during collision. They function best at shallow impact angles. All collision energy must be dissipated by the vehicle itself.
2. *Semi-rigid.* The semirigid systems can yield slightly during vehicle collision, thereby reducing the magnitude of force transmitted to the vehicle. Three examples are (a) the blocked-out W-beam rail (with or without a rubbing rail), (b) the strong-beam, weak post system and (c) Thrie beam on strong post. The W-beam or Thrie beam rail spans relatively rigid closely-spaced posts. The

strong-beam (box beam) weak post system depends on the bending resistance of the strong, heavy beam element alone.

3. *Flexible*. These systems may be composed of W-beam or Thrie beam rails or of cables mounted on weak posts. These flexible systems absorb the impact energy, redirect the vehicle in the direction of traffic, and are kindest to the vehicle and driver.

In selecting a system, deflection characteristics must be considered in relation to available space. A computer program, Analysis of Roadside Design (NARD), is available for predicting deflection for W-beam and thrie-beam systems with different post spacings and single or double rails.

The "clear roadside zone" concept presented in the AASHTO Roadside Design Guide is key to determination of guiderail placement. Under this concept, a traversable, unobstructed roadside zone should extend beyond the edge of the driving lane for an appropriate distance so that the motorist can generally stop or slow the vehicle and return to the roadway safely. The width of the zone depends upon the traffic volume, the design speed, and the roadside slope. It may also be modified to reflect accident history or special site conditions. Recommendations for when barriers are warranted are provided in Table 12.1.

Tables 12.2 and 12.3 give various properties for different barrier systems. Standard barrier types are illustrated in Figure 12.1.

Table 12.2 Typical sectional properties of W-Beam guiderail per unit section*

Galvanized Thickness, mm	Area of Cross Section, mm^2	Moment of Inertia		Section Modulus		Approx. Weight	
		Horizontal, mm^4	Vertical, mm^4	Horizontal, mm^3	Vertical, mm^3	per m	per section
						kg	
2.8	1284	0.96×10^6	12.5×10^6	2.25×10^4	8.03×10^4	11.9	45.4
3.5	1652	1.24×10^6	16.1×10^6	2.88×10^4	10.30×10^4	15.1	57.6

*Bolt holes not considered. Dimensions are nominal, subject to manufacturing tolerances.

Table 12.3 Thrie Beam sectional properties

Uncoated Thickness, mm	Area, mm^2	Moment of Inertia, $mm^4 \times 10^6$	Section Modulus, $mm^3 \times 10^4$	Approx. Weight, kg: 3.81 meter length	Approx. Weight, kg: 7.62 meter length
2.66	2026	1.49	3.52	69	132
3.42	2605	1.99	4.70	87	169

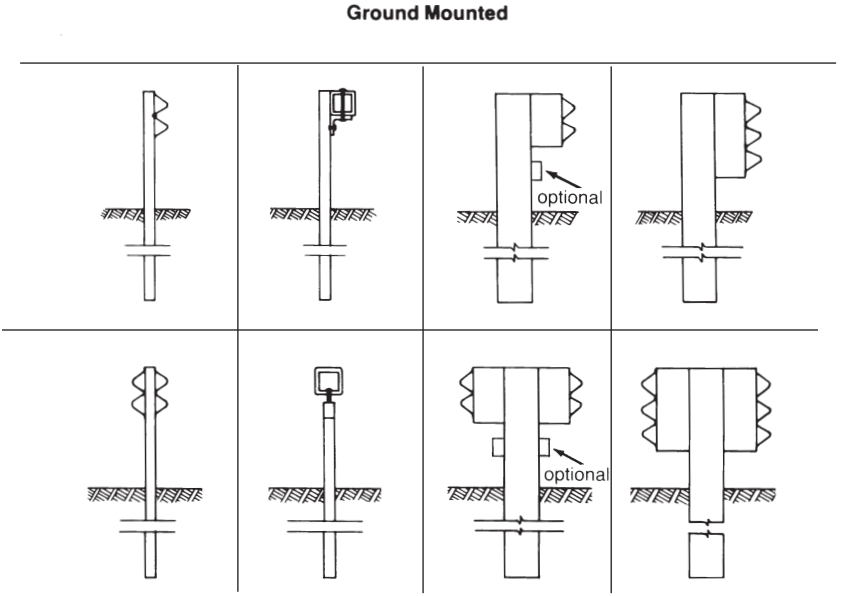

Figure 12.1 Standard barrier types.

DESCRIPTION OF SEMI-RIGID GUIDERAIL SYSTEMS

W-Beam (Figure 12.2) or Thrie Beam (Figure 12.3)

1) *Rail* - Rail elements are cold-formed standard W Sections of 2.8 mm (uncoated) specified thickness steel and conforming to the requirements of AASHTO Designation M 180. Standard laying lengths are 3.81 m.
2) *Posts* - Wooden posts, including blocks, are construction grade Southern Pine or Douglas Fir, pressure treated. Steel posts are either 110 x 150 x 4.5 mm cold formed C-sections or W150 x 13 hot rolled structural shapes conforming to A 36 / A 36 M or A 588 / A 588 M.
3) *Rail Coatings* (painted, galvanized, or weathering) - Standard coating is galvanized before or after fabrication with 600 g/m^2 of double-exposed surface, according to ASTM A 924 or ASTM A 123 / A 123 M. A heavier coating is also available. Bolts are galvanized per ASTM A 153 / A 153 M. Special weathering steel is available in which rail elements conform to ASTM A 375 or AASHTO Designation M 180, and nuts and bolts to ASTM A 242.
4) *Splices* (bolts, backup plates) - All splice and post bolts are flat rounded, headed with oval shoulders to prevent turning. Bolts are 16 mm ASTM A 307, galvanized to ASTM A 153 / A 153 M.
5) *Terminals, Transitions* - Terminal sections are 2.8 mm (uncoated) specified thickness steel and galvanized similar to the rail. Transition connectors are 3.5 mm (uncoated) thick steel and capable of transmitting the full tensile strength of the rail.

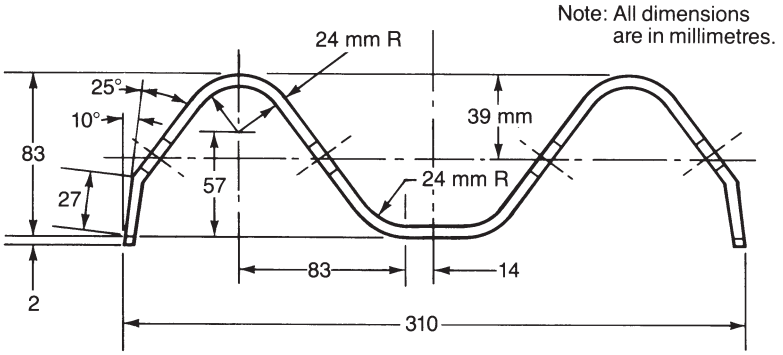

Figure 12.2 Details of a W-beam guiderail.

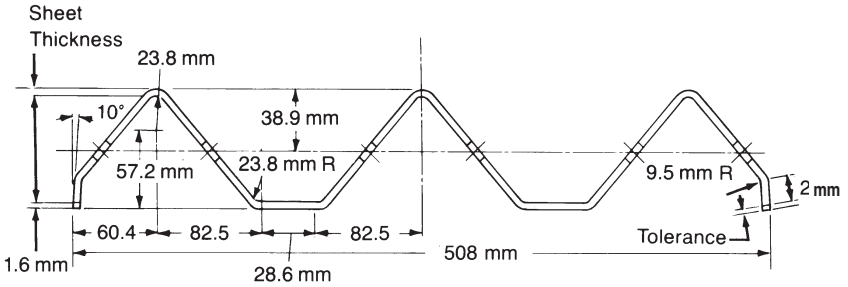

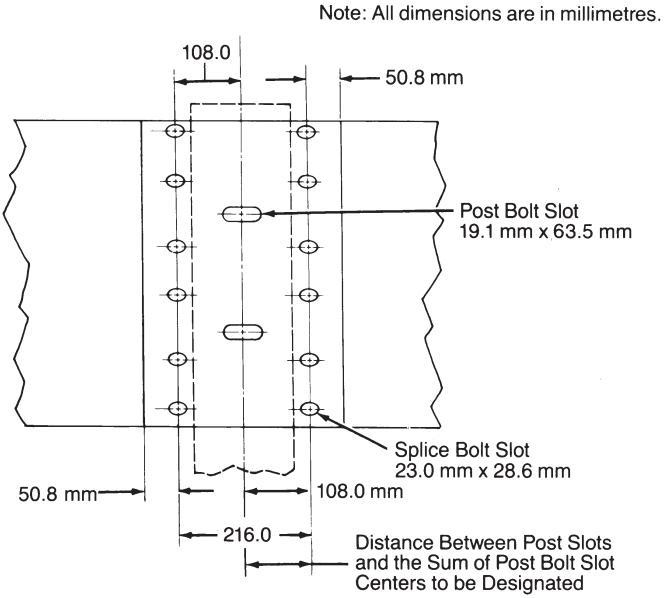

Figure 12.3 Details of a Thrie-beam guiderail.

Offset mounting of W-beam on wood post.

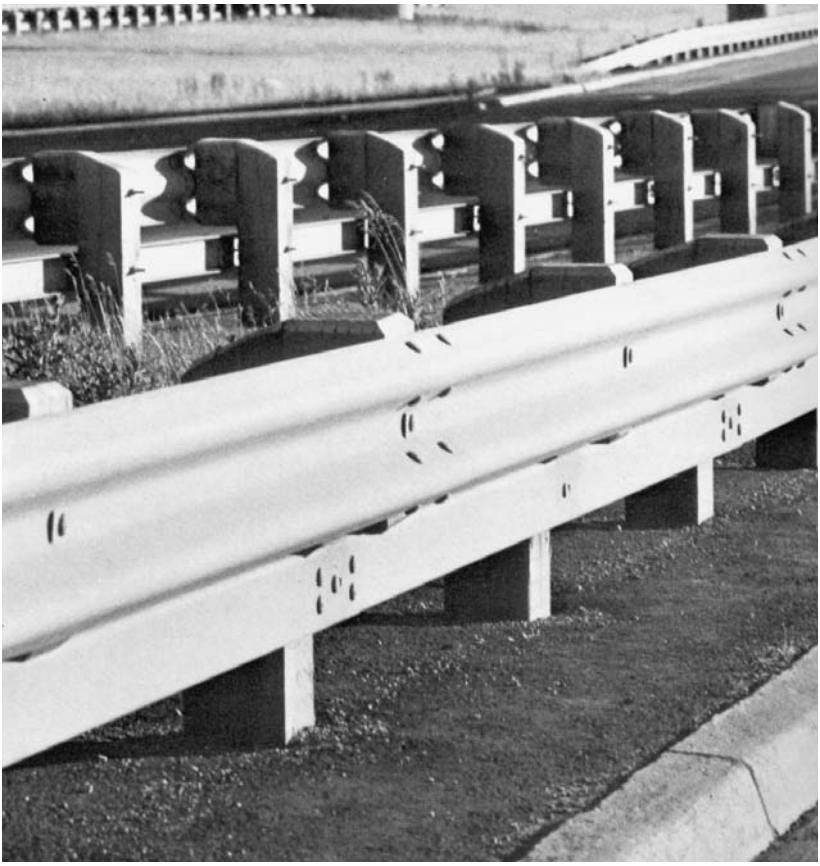

W-beam guiderail with channel rub rail located below.

Box Beam

1) *Rail* - Rail elements consist of box sections cold formed from steel tubes. The steel is ASTM A 500 or A 501; or, for weathering steel, ASTM A 618.
2) *Posts* - Posts are structural steel conforming to ASTM A 36 / A 36 M, or special weathering steel conforming to ASTM A 588 / A 588 M.
3) *Coatings* - Standard coating of entire rail system is galvanized conforming to ASTM A 123 / A 123 M. Special weathering steel conforming to ASTM A 618 is available.
4) *Splices* - Splice plates are of steel meeting ASTM A 36 / A 36 M. All bolts and nuts meet requirements of ASTM A 307 (except that splice bolts and nuts shall conform to ASTM A 325 / A 325 M) and be galvanized per ASTM A 153 / A 153 M.
5) *Curving* - Box Beam Guide Rail 150 x 150 mm - elements are shop curved for radii less than 220 m - Box Beam Median Rail 150 x 200 mm - elements are shop curved for radii less than 455 m.

Box beam median barrier across a bridge.

INSTALLATION PRACTICE

The following installation layout practices are taken from the AASHTO Roadside Design Guide.

Installation Length. Installation length includes the warranted length need and upstream and downstream terminals. Short sections should be avoided as they are often more hazardous than none. Isolated sections of unanchored guiderail should not be less than 30 m long. To eliminate short lengths, flattening of critical portions of embankment should be considered. Short gaps between installations should be avoided. Ends of guiderail should be anchored in accordance with the AASHTO Guide.

Transition Between Systems. Transition from one type to another should be smooth with a graduated stiffness. Flexible systems should not be directly connected

to rigid systems. A length of semirigid section with graduated post spacing will produce an effective stiffness transition. Recommended transitions are shown in the AASHTO Guide.

Shoulder Requirements. AASHTO recommends increasing overall shoulder width by 0.6 m on fills where guiderails are necessary. Ideally, any curb should be put in the preferred position behind the installation. If the curb must be in front of the installation, the curb should be a low mountable type.

Uniform Clearance. A desirable feature of highway design is its uniform clearance to all roadside elements. These basic elements - parapet, retaining wall, abutment, guiderail - should be in line to prevent vehicle snagging. Shoulder width should be constant whether the highway is in cut, on fill, or on structure.

General Treatment at Structures. The installation should be attached to the structure so that adequate strength of the system is developed.

Roadway narrowing transition should be gradual - 5 to 6 m longitudinally per metre of width reduction. To effect a smooth transition in rigidity, the post spacing should be graduated from the structure end, as shown in the standards.

Assembly and bolting the steel guiderail joints proceeds rapidly.

Treatment at Highway Appurtenances. Short installations around light standards, signs and gore areas are not recommended because they increase accident frequency, seldom decrease accident severity, and frequently cost more than modification or relocation of the appurtenance. Serious consideration should be given to relocating the appurtenance or utilizing breakaway construction with no barrier. For large signs, bridge abutments, large trees, and other roadside obstacles, examples are shown.

Typical bridge tubular steel railing.

INSTALLATION OF GUIDERAIL OVER LOW COVER SOIL-STEEL STRUCTURES

When soil-steel structures are installed in minimum cover conditions, there may not always be a sufficienten depth of cover to accommodate the required embedment of guiderail posts. The Texas Transportation Institute researched this topic and presented their findings at the annual Transportation Research Board meetings in 1992.

The report detailed a recommended procedure to allow increased guiderail post spacing to either 3810 mm or 5715 mm centres from the typical spacing of 1905 mm. When increasing the post spacing, two sections of guiderail are nested together to provide a net coverage greater than the clear post spacing.

When spanning a 3810 post spacing, the minimum nested rail length required is 7620 mm (double length rail). The nested rail sections extend one standard post spacing (1905 mm) either side of the 3810 post spacing.

When spanning a 5715 post spacing the minimum nested rail length required is 11430 mm (triple length rail).

Transition from bridge rail to box-beam guiderail.

The nested rail sections extend one standard post spacing (1905 mm) downstream ("down-traffic direction") and two standard post spacings (1905 mm) upstream ("up traffic direction") from the 5715 spacing. Whenever nested rails are employed to span a post spacing greater than the standard 1905 mm, a rail joint cannot be located within the zone of the increased post spacing.

BRIDGE RAILING

Safety and minimal damage are the objectives of railings on bridges and overpasses-for errant vehicles and others on the bridge, and for the traffic on the roadways, railroads, or waterways below. A bridge rail must *restrain* a colliding vehicle, *prevent* it from vaulting, and at the same time, *slow* it to a safe speed without severe redirection, pocketing, or snagging. Furthermore, the stiffer bridge rail must be coordinated with the softer off-deck guiderail system.

During past decades, progress toward more reliable bridge rail systems has resulted from the efforts of engineers involved in design and full-scale research. The trend is towards integrating roadway and bridge rails into one cohesive system.

BIBLIOGRAPHY

AASHTO, *Roadside Design Guide,* American Association of State Highway and Transportation Officials, 444 N. Capitol St. N.W., Ste 249, Washington, D.C. 20001, 1996.

AASHTO, *Highway Safety Design and Operations Guide,* American Association of State Highway and Transportation Officials, 444 N. Capitol St. N.W., Ste 249, Washington, D.C. 20001, 1997.

AASHTO, *A Guide to Standardized Highway Barrier Hardware,* American Association of State Highway and Transportation Officials, 444 N. Capitol St. N.W., Ste 249, Washington, D.C. 20001, 1995.

CHAPTER 13

RETAINING WALLS

GENERAL

Soils and other materials have a natural angle of repose. To maintain a steeper slope, some type of wall or support is necessary to prevent sloughing. Retaining walls are used widely for this purpose.

Retaining walls can be used:

1. To solve problems of limited right of way and confine ground slopes within practical limits.
2. On road-widening and grade-separation projects.
3. To stabilize steep cut and embankment slopes (but not to stop landslides).
4. To repair breaks in roadway embankment.
5. To prevent shore or bank erosion.
6. As wingwalls for abutments and headwalls.
7. As loading platforms or ramps.
8. For parking areas.
9. For cutoff walls or ditch checks in deep channels.
10. As aircraft splinter protection walls and barricades.
11. Explosion walls in chemical plants.
12. Crusher walls.

Retaining walls must be designed to resist sliding, overturning and settling pressures. Rankine or Coulomb analysis methods are typically used to determine the magnitude, direction and point of application of the soil pressures on a retaining wall. The reader is directed to standard reference works on this subject such as the Canadian Foundation Engineering Manual.

An adequate foundation is necessary for satisfactory performance. The foundation must carry the weight of the retaining wall including the increased pressures due to the overturning moments. Global stability of the entire slope must also be ensured. In seismic zones the additional force effects due to earthquake loads should be considered in the calculations for overturning and sliding.

Backfilling with predominantly clayey soils should be avoided, particularly if seepage exists in the slopes. Pervious granular soils, supplemented with pipe subdrains, ensure the most satisfactory backfill and stability of the wall. Frost susceptible soils should not be used for backfill in locations where frost may penetrate inside or behind the wall.

TYPES OF WALLS

There are several basic types of walls: gravity, reinforced soil, cantilever, buttress, and bulkhead. Bin type walls are either the gravity or bulkhead type with many different variations available.

Bin Type Walls

Bin type walls are a system of closed faced bins, each 3.05 meter long. Sturdy, lightweight steel components are bolted together at the job site. Backfilled with reasonable care, they transform the soil mass into a permanent economical gravity-type retaining wall. Unique design allows bin type walls to flex against minor, unforeseen ground movement that might damage or destroy a rigid wall.

Face of bin type retaining wall.

Bin type retaining wall being assembled.

Steel bin type walls are available in three types. Type I bins, shown schematically in Figure 13.1, have been used to heights of 11 meters. They are not manufactured to a great extent, except for installations requiring extensions or replacement parts. Type II and III bins, as shown in Figures 13.2 and 13.3 respectively, are generally more economical then Type I and have a lot fewer components. The maximum heights for each type include a toe burial depth.

All three types of bins consist of metallic coated, corrugated steel front and rear members (stringers) connected at the bin corners by vertical members. These vertical members (vertical connectors) are U-shaped for Type I walls and T-shaped for Type II and Type III. Bin depth is maintained by using spacers, front to back, between the vertical connectors. Base plates are provided to aid erection and support the vertical connectors during erection but are not to act as footings to develop column loads in the vertical connectors.

DESIGN CONSIDERATIONS

Bin type walls are designed as any gravity wall with the earth and steel box dimensioned to resist overturning and sliding forces imposed by the retained soil and other superimposed loads. The required depth of each wall should be designed individually. Consideration of the loads on the bins (including any surcharge or seismic conditions), the foundation requirements, and the global stability of the entire slope, are all part of a complete analysis.

As stated previously, the gravity wall is actually the confined earth mass. It is important to treat the structure as such at all times. Support for the wall is needed under the earth mass, not under the steel members. On rigid foundations, provisions must be made to allow slight settlement of the vertical corner members. Normal practice is to provide a compressible cushion under the base plates with approximately 200 mm of loose soil.

Sliding forces may or may not be important in a specific installation. Conventional design practices can be employed to check this requirement. As a matter of practice, bin type walls have been placed from 0.5 to 0.9 m below grade to provide sliding resistance.

Where there is a limited or level surcharge, it is conservative practice to specify wall depth (D) Table 13.1, equal to about 45 percent of overall height. With a heavily surcharged wall, depth (D), Table 13.2 should be increased to at least 55 percent of the height.

To increase wall stability, a batter or inclination of 1 to 6 is often used. If the wall is to be installed without batter, additional stability can be obtained by selecting a design with a greater base width.

Table 13.1 Loading conditions for retaining walls

Batter	Level	Slight With Superimposed Load	Sloping to 3 x D	Sloping above 3 x D
Wall On 1:6 Batter	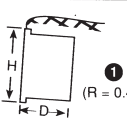	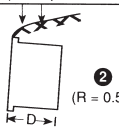	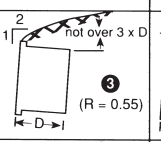	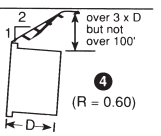
Wall Vertical	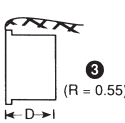	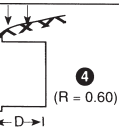	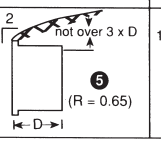	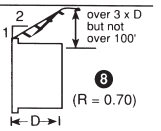

*D = R × H

Unit Number	Name	Description
1.	Vertical Connector	Vertical member connecting all other units
2.	Vertical Connector cap	Cover for front vertical connector
3.	Stringer Stiffener	Top flange protector
4.	Stringer	Horizontal longitudinal members in front and rear walls
5.	Connecting Channel	Connector for attaching stringers to vertical connectors
6.	Spacer	Transverse members that separate the front and rear vertical connectors
7.	Bottom Spacer	Special bottom transverse member
8.	Base Plate	Installation plate on which the vertical connector rests
9.	bolts	
10.	nuts	
11.	spring nuts	

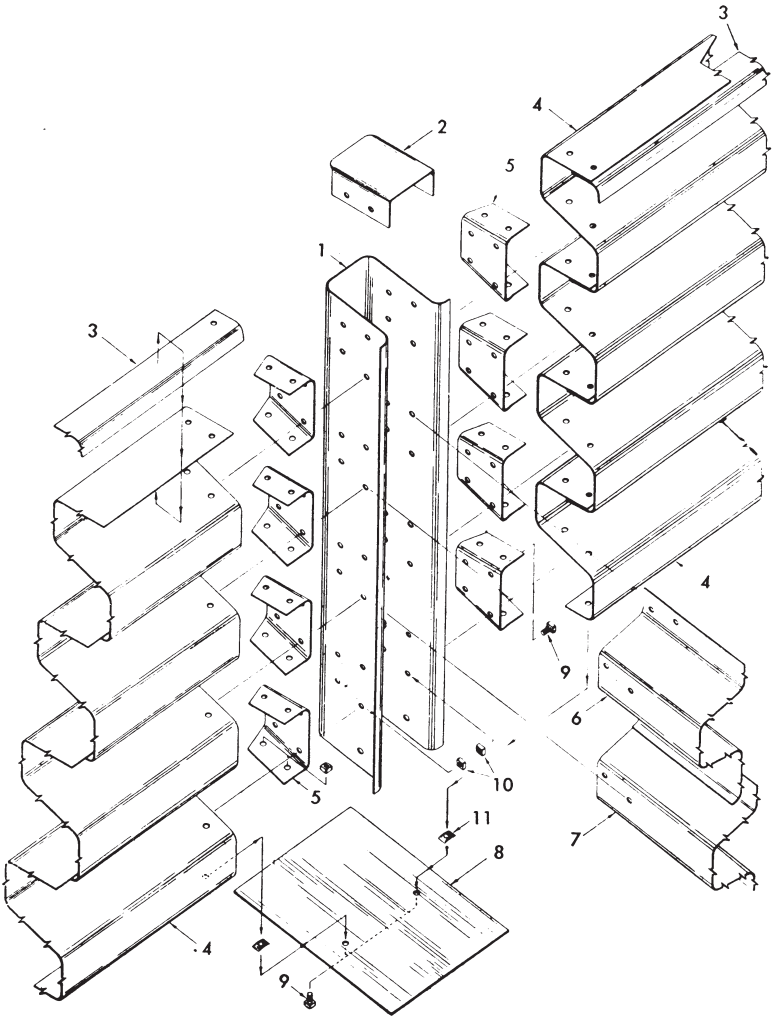

Figure 13.1 Exploded view of front panel joint Type I steel binwall as seen from the inside.

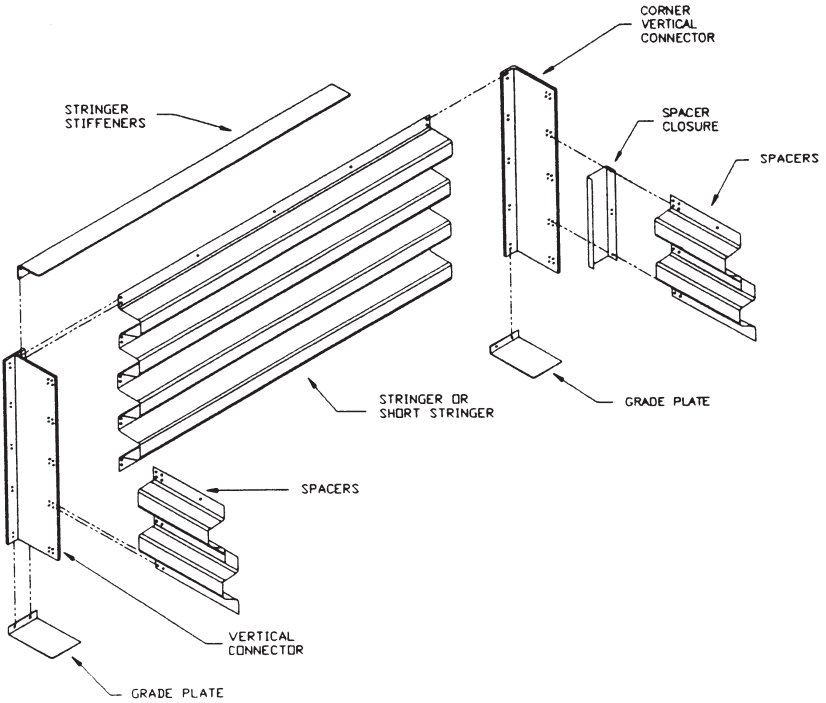

Figure 13.2 Exploded view of front panel joint of Type II steel binwall as seen from the inside.

TYPE III WALL COMPONENTS

A	VERTICAL CONNECTOR	Connects stringers and spacers.
B	UPPER VERTICAL CONNECTOR	Connects stringers and spacers above vertical connector splice.
C	SPLIT VERTICAL CONNECTOR, TYPE A	Connects stringers and spacers at end wall corners.
D	SPLIT VERTICAL CONNECTOR, TYPE B	Connects rear stringers to spacer at change in bin depth.
E	STANDARD STRINGER	Forms front and rear walls.
F	SPACER	Forms transverse and end walls.
G	STRINGER STIFFENER	Stiffens top stringer (front wall).
H	SPACER CLOSURE	Retains bin fill at end walls.
I	GRADE PLATE	Assists in bin construction layout.
J	TIE ROD	Reinforces spacers in end bin.
K	15.9mm (5/8") ø A325 BOLT	Fastens all components.

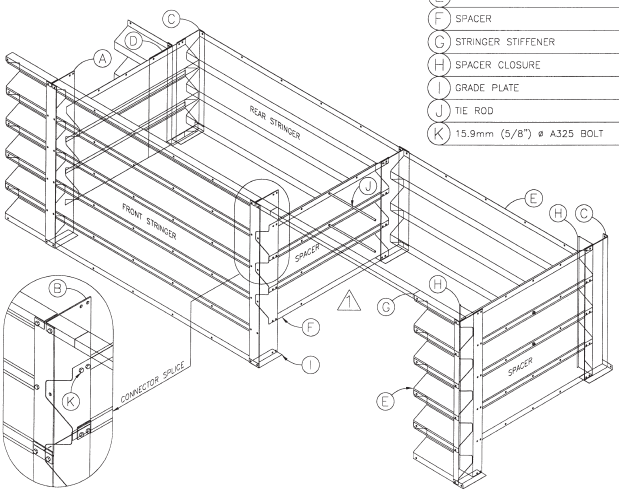

Figure 13.3 Isometric view of Type III steel bin type wall

Design Depths and Heights

In both Type I and Type II bins, six basic bin depths are available and in Type III, there are 11 bin depths available. Bin depths increase to provide additional support as heights increase, but are approximately one-half the wall height. (Wall height is measured overall, not just ground level to top of wall.)

Battered walls (1:6) are recommended. When vertical walls are designed, a small batter should be provided in installation to account for slight settlement of the toe.

Changes in Elevation

Stringers may be erected on a horizontal plane and stepped in multiples of 406 mm to meet a change in grade. Where a change in wall height requires a change in the base width, a split vertical connector is attached to the transverse spacers at an intermediate joint.

Curved Walls

Bin type steel retaining walls can be built to almost any degree of curvature or with sharp change of direction tangentially. See the manufacturers literature for suggested details for curves and special corners.

Special Treatment

Normally bin type walls are furnished in a galvanized finish. For particularly corrosive conditions, additional protective coatings are available.

When special aesthetic treatment is required, it can be achieved through the use of vegetation, plantings or stepped bins. With Type II and Type III bins, precast concrete face panels, often with special textured surfaces may be used.

Bridge pier uses bin type retaining wall components.

INSTALLATION CONSIDERATIONS

Retaining walls are more effective and less susceptible to failure if used near the top of a slope rather than at the bottom. Soundings or borings should be made to determine the subsoil, ground water and foundation conditions. A uniform foundation is best.

By trenching only for the walls of the bins, earth inside the bins need not be disturbed.

The baseplates under the vertical connectors must not be founded on rock or concrete. A 200 mm thick layer of backfill material (lightly composted and then scarified to provide a loose surface) should be placed under the baseplate in these cases. The wall is intended to be flexible. It depends on the whole system settling uniformly to avoid concentrated loads which can cause local deformations on the wall components.

Backfill inside the bin is a key part of the finished wall performance. No mass dumping of the fill inside can be tolerated. It must be placed and compacted in 150 to 200 mm lifts to 90% standard Proctor density. Ideal bins contain well graded, granular materials with maximum particle sizes not exceeding the 25 mm range and with no more than 10% passing the 100 sieve size. The manufacturer should be consulted if other backfills are to be used.

Backfill behind the wall must also be properly controlled and compacted to limit the active soil pressure on the wall and surface settlements behind the wall.

Proper drainage of the backfill is critical to any retaining wall. The load on the wall and the foundation can be excessive if ground water is not removed. Every wall should be well drained either by the use of highly permeable backfill and base material, or by proper subdrainage systems.

WELDED WIRE WALLS

A welded wire wall is essentially a gravity type retaining wall composed of a “block” of reinforced soil. The reinforcement of this soil mass is achieved by laying welded wire mats horizontally in regularly spaced lifts as the soil is being compacted. The welded wire reinforcement along with the compaction of the granular fill allows this soil block to act monolithically to resist lateral earth forces.

The proper design of both the soil and the reinforcing mesh is crucial to the stability of the welded wire wall. The soil must be a free draining granular material placed and compacted as specified by the wall designer. The welded wire reinforcement must be of an adequate size to resist the stresses within the soil mass.

The facing material for a welded wire wall is typically a welded wire mesh or precast concrete panels. The facing material is attached to the soil reinforcement mats as the wall is constructed. The wall face can be vertical or battered. If the wall face is battered as much as 1:1, a lighter wire mesh reinforcing can be used. This sloped wall system is generally referred to as a welded wire steepened slope and is illustrated in the photos that follow.

Welded Wire Wall Specifications

The welded wire mesh is shop fabricated of cold drawn steel wire conforming to the minimum requirements of CSA-G30.3-M1983. The wire mesh is welded into the finished mesh fabric in accordance with CSAG30.5-M1983. All wire materials including the soil reinforcements, facing materials, connection pins and other related

Welded wire wall.

Construction of welded wire wall.

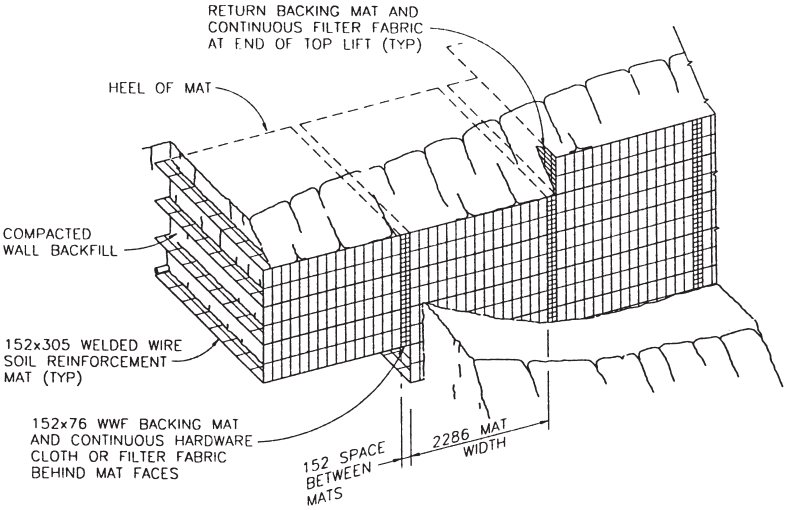

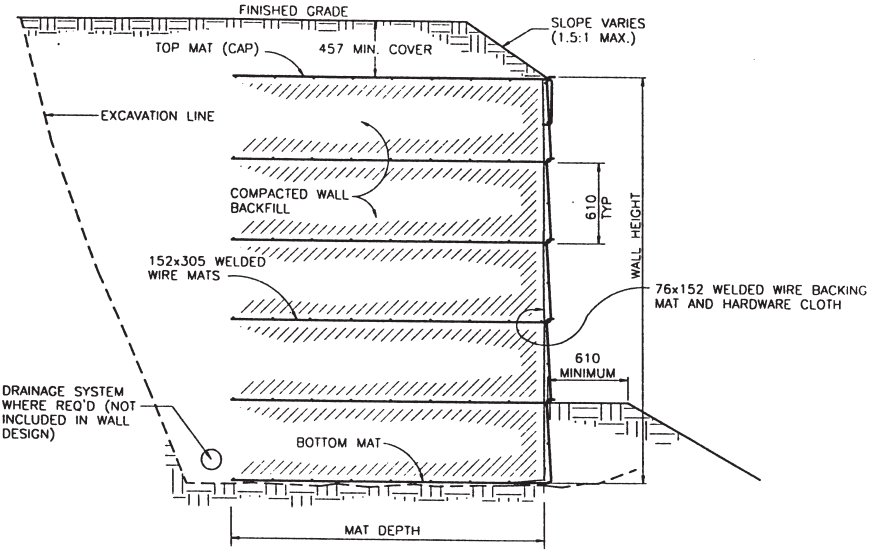

Figure 13.4 Welded wire wall.

hardware are hot-dip galvanized with 610 g/m^2 zinc coating as per CAN/CSA-G164-M92. Any damage done to the galvanizing prior to installation should be repaired in an acceptable manner and provide a galvanized coating comparable to that provided by CAN/CSA-G164-M92. Typical welded wire mesh spacing is 152 mm or 305 mm for the longitudinal wires (normal to the wall face) and 305mm, 610 mm or 914 mm for the transverse wires (parallel to the wall face).

The select backfill material used within the welded wire wall must be free draining, well graded and free from deleterious materials. The material must exhibit an internal friction angle of no less than 34 degrees and must contain no particles larger than the smallest mesh size opening in the wire soil reinforcements. The soil must meet electrochemical requirements in terms of conductivity, pH, sulphate and chloride content to avoid accelerated corrosion of the soil reinforcement mats.

Welded Wire Wall Design Considerations

A welded wire retaining wall is designed externally as any gravity system is. The length that the welded wire mats must extend into the soil from the wall face is determined by the depth required to satisfy sliding and overturning criteria. The minimum length for the welded wire soil reinforcement is the larger of 70% of the wall face height or 2438 mm.

The internal pressures within the reinforced soil mass must be calculated in order to determine the gauges of wire required for the reinforcing mesh. The longitudinal wire are sized to withstand the tensile stresses transferred from the soil to the wire mesh while the transverse wires are sized to ensure adequate pullout capacity of the mesh.

Special Treatment

The facing material of the welded wire wall can be made from welded wire mesh or precast concrete panels. The concrete panels can be manufactured to achieve virtually any finish desired. The welded wire mesh can be covered with precast tilt-up panels, a cast in place fascia, or virtually any treatment of wood, concrete or stone. A welded wire wall can easily adapt to convex and concave bends in the profile of the wall face.

Welded Wire Wall Construction

Generally, the only preparation required for the installation of a welded wire wall is the placement, compaction and levelling of a minimal depth of granular fill below the bottom lift of welded wire. However, any unsuitable base material must be removed and replaced with a suitable granular material. If precast panel facing is used, a cast-in-place levelling pad may be used to facilitate the level installation of the bottom row of panels. A minimum of 610 mm of face should be buried to provide protection from frost.

The engineered fill must be protected from water during construction. Any backfill which has become wet should be removed and replaced with dry material.

The engineered backfill must be placed in lifts to a maximum of 305 mm per lift. Compaction equipment specifications should be checked to ensure that 95% of Standard Proctor Density can be achieved with a lift height of 305 mm. Care should be taken to avoid running any equipment directly on the welded wire mesh. Compaction of the soil within 1000 mm of the face should be done with hand equipment to avoid distorting the facing material.

Gabions provide protection.

Construction of gabion wall.

Proper drainage must be supplied to ensure that water does not enter the engineered backfill zone. The presence of water could introduce hydrostatic pressures on the wall not considered during design and could also wash fine soil particles out of the engineered backfill zone.

GABIONS

A gabion is a heavy duty, galvanized steel welded wire or twisted wire mesh basket, in the shape of a box, that is divided by wire diaphragms into cells. Filled with heavy material (typically rocks, or broken concrete) that cannot escape through the mesh openings, it generally is used as a construction block, becoming part of a larger unit of several gabions tied together to form a structure. Main features of the gabion as a construction material are:

- Strength
- Flexibility
- Durability
- Aesthetics
- Permeability
- Practical Installation
- Low Cost
- Low Environmental Impact

Sack gabions, sheets of mesh stitched around the fill material, provide small, cylindrical units typically used without interconnection for emergency situations.

Introduced to the construction industry during the last century, the unique combination of these features make gabions an economical material for constructing many earth retention, soil erosion control and river training structures.

Materials

Type I Welded Wire Gabions

Welded wire gabions are made to the requirements of ASTM A974 from metallic-coated steel wire fastened together to form rectangles or squares by a process that employs the principle of fusion combined with pressure. The welded wire fabric conforms to ASTM A641, A853, A856/A856M, or A809. (An additional PVC coating is also available.) It is supplied in a diameter of 2.2 mm (Standard US wire 13.5 Gauge). The nominal mesh opening is 76 x 76 mm.

Type II Twisted Wire Gabions

Twisted wire gabions are made to the requirements of ASTM A975 of twisted metallic-coated steel wire mesh. For proper performance, the mesh must be non-raveling (i.e., does not pull apart when one of its wires is cut) and provide a maximum nominal mesh opening of 114 mm. The wire, used to manufacture the mesh as well as to assemble and install the gabion, must meet ASTM A 641 or A856/A856M requirements with a minimum nominal diameter of 2.2 mm (standard U.S. wire gauge 13.5).

Additional PVC or epoxy coatings have high mechanical and chemical resistances and are used when additional protective coatings are desirable.

Gabion fill material must have suitable compressive strength and be durable to resist the loads on the gabion, as well as the effects of water and weathering. The size of fill material is limited to the 75 mm to 300 mm range. A well graded fill increases the gabions density.

Table 13.2 Standard sizes box gabions

Sizes				
Length, m	Width, m	Depth, m	No. of Diaphragms	Capacity, m^3
1	1	1	0	1
2	1	1	1	2
3	1	1	2	3
4	1	1	3	4
2	1	0.5	1	1
3	1	0.5	2	1.5
4	1	0.5	3	2
2	1	0.3	1	0.6
3	1	0.3	2	0.9
4	1	0.3	3	1.2
3	2	1	2	6
4	2	1	3	8

Table 13.3 Standard sizes sack gabions

Length, m	Diameter, m	Capacity, m^3
2	0.6	0.57
3	0.6	0.85
2	1	1.57
3	1	2.35

Gabion Sizes

Gabions come in a range of modular sizes to facilitate construction of larger units. For standard sizes, see Table 13.2 and 13.3.

Applications

Gabions are used in a variety of applications to provide aesthetic, low cost solutions to construction and design problems.

Principle uses include:

- Channel linings and bank protection
- Retaining walls
- Bridge abutments and bridge abutment protection
- Culverts (headwalls and outlet protection)
- Weirs and drop structures
- Groins
- Low water crossings
- Lake and coastal protection
- Earth dam; detention and retention basin revetments
- Emergency works - sack gabions

A review of a few typical uses does not cover the complete range of gabion applications, but helps to demonstrate the adaptability and flexibility of gabions in aiding or providing the solution of several typical design problems.

Gabions form free draining vertical, stepped or battered retaining structures that often do not require a special foundation. The flexibility of gabion walls allows them to withstand foundation movements and differential settlements.

These features are especially advantageous in constructing a range of retaining walls for general earth retention, bridge abutments (for short or light duty bridges), as well as wing walls and end protection for culvert structures. Examples of some design applications are shown in Figures 13.5 and 13.6.

Wall design typically follows gravity retaining wall methods or reinforced soil structure methods. For the latter (Figure 13.12), layers of the same mesh used for gabion fabrication provide the reinforcement.

Gabions are ideal for many hydraulic flow control applications because of their mass, flexibility and permeability. They are used to construct weirs, where their modularity makes it easy and economical to change crest levels, as well as for groins and low level water crossings. Gabions resist stream flow and flood forces, follow changing foundation configurations without cracking or breaking and allow free drainage of the foundation soil after flow levels subside.

These same features - mass, flexibility and permeability - also make gabions ideal for a variety of erosion protection applications. They are widely used to line stream channels, protect road embankments and the upstream forces of dams and detention basin revetments. When the gabion fill is treated with a sand asphaltic mastic, which penetrates the voids making the unit impermeable, gabions may economically replace the impervious core of the earth dam.

Gabions resist wave action and erosion due to runoff. They are easily adaptable to almost any channel shape, cross section or embankment slope. A typical channel lining application demonstrates a variety of erosion control functions.

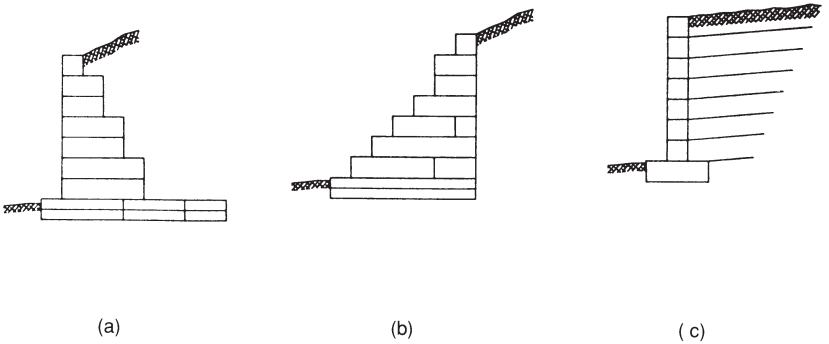

Figure 13.5 Typical cross sections for a) gravity gabion wall (stepped); b) semi-gravity gabion wall; and c) reinforced soil gabion wall.

Design

Gabion design and engineering considerations vary with application and site conditions. Detailed information can be obtained from the manufacturer.

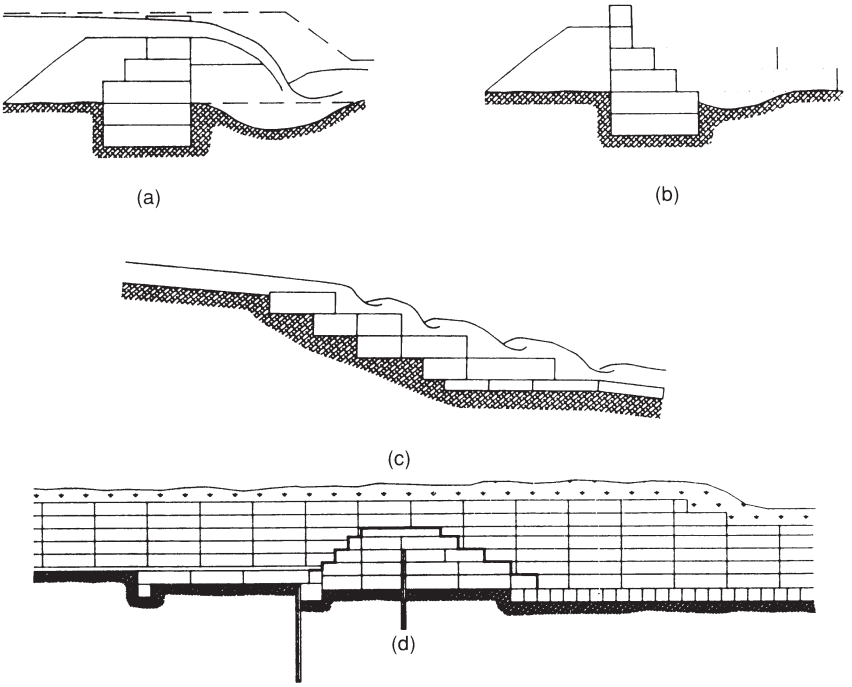

Figure 13.6 Typical gabion weir cross sections: a) vertical face; b) stepped face; c) long stepped; and d) sloped.

Installation

Gabion installation is relatively simple and requires little skilled labor. They can be installed underwater and in adverse conditions. Basic installation is completed by following these steps:

1. *Foundation Preparation* - Since gabions typically do not require special foundation preparation, it is generally only necessary to excavate to proper grade and alignment through an area slightly wider than the base of the structure.

2. *Preassembly* - Preassemble gabion baskets prior to installation by rotating lateral panels, end panels and diaphragms into position and joining their vertical edges together with the manufacturer recommended assembly system. See Figures 13.7 and 13.8.

3. *Basket Installation* - Each layer of empty gabion baskets should be placed in position and filled according to the requirements of the project. Join the contacting edges of adjacent, empty baskets in the same layer, by the recommended lacing or spiraling system, vertically along the sides and horizontally along the top.

4. *Basket Filling* - Use care when filling the gabions to avoid damage to the wire coating, prevent bulging, minimize voids and maintain alignment. Whenever

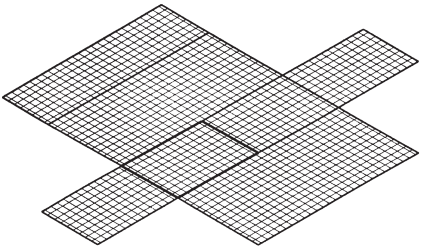

1) OPEN THE GABION OUT

2) STAND THE SIDES UP AND JOIN THE EDGES WITH HOG RINGS

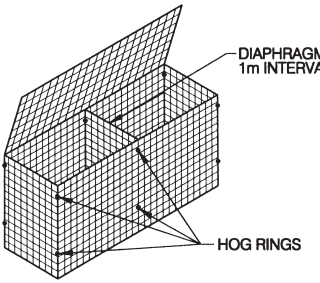

NOTE:
THIS GUIDE SHOWS ASSEMBLY WITH HOG RINGS AND SPIRAL BINDERS BECAUSE IT IS FASTER.
YOU MAY USE TIE WIRE AND HALF-HITCH LACING FOR ALL CONNECTIONS IF DESIRED.
HOG RINGS ARE NOT PERMANENT CONNECTIONS AND MUST BE FOLLOWED BY SPIRAL BINDERS OR TIE WIRES.

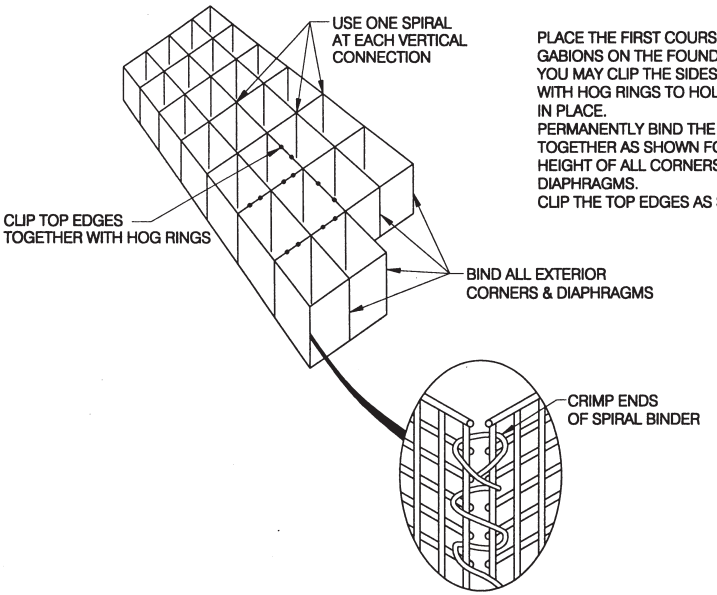

PLACE THE FIRST COURSE OF GABIONS ON THE FOUNDATION.
YOU MAY CLIP THE SIDES TOGETHER WITH HOG RINGS TO HOLD THEM IN PLACE.
PERMANENTLY BIND THE GABIONS TOGETHER AS SHOWN FOR THE FULL HEIGHT OF ALL CORNERS AND DIAPHRAGMS.
CLIP THE TOP EDGES AS SHOWN

Figure 13.7 Welded wire gabions preassembly.

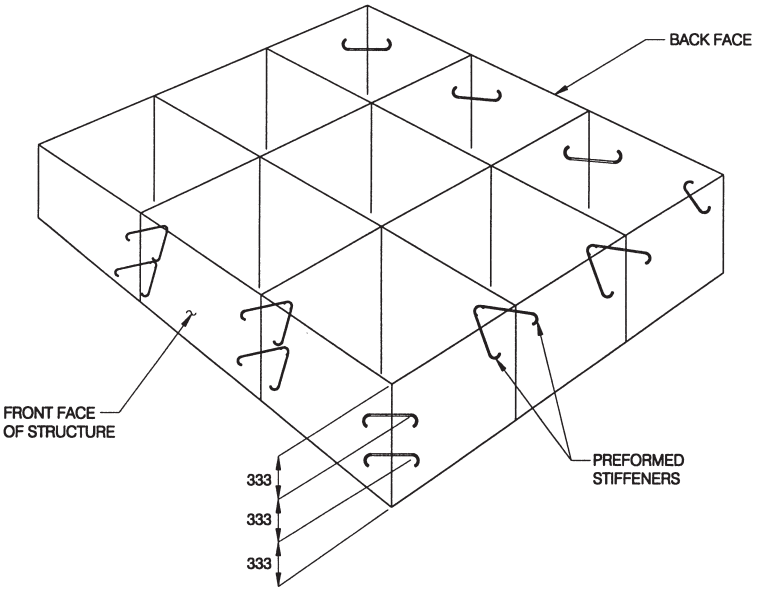

INSTALL PREFORMED STIFFENERS ACROSS THE CORNERS OF THE GABIONS BEFORE FILLING. TWO ROWS OF STIFFENERS (4 PER CELL) ARE REQUIRED ON THE FRONT FACE. INSTALL A SINGLE ROW (2 PER CELL) ON THE BACK FACE. NO STIFFENERS ARE REQUIRED IN THE INTERIOR CELLS.

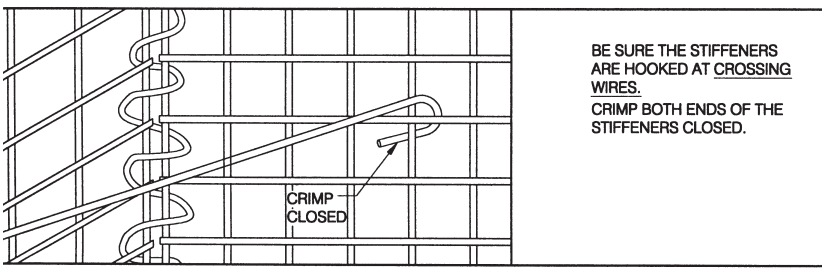

Figure 13.8 Welded wire gabions preassembly.

possible, all the cells in a layer should be filled at the same time. In no case should a cell in a layer be filled to a level more than 300 mm higher than the level of an adjacent cell. Prevent bulging of vertical faces by inserting horizontal, internal connecting wires or corner stiffeners approximately every 300 mm between layers of fill as recommended by the manufacturer. These reinforcements connect the front panel with the back panel of the same cell. To counter any future reduction in volume, due to settlement of the filling material, gabions typically are uniformly overfilled to a level 25 - 50 mm above the top of the basket.

5. *Lid Closing* - Stretch the lid tight over the fill material. Use crowbars or manufacturer approved lid closing tools if necessary. Join the top edges of front, end panels and diaphragms to the lid using a recommended assembly system.

6. *Layer Connection* - Where multiple layers are used, each is placed in position over the already filled and closed layer. First, the empty gabions in the new layer should be connected to one another as described in point 3. Then the gabions are securely attached as before to the already filled and closed lower layer along their contacting perimeters.

7. *Backfilling* - Backfill the area behind the gabion structure simultaneously with the cell filling operation. Unless otherwise required by project specifications, place the backfill material at or near optimum moisture content in 200 mm lifts and compact to a minimum of 95% Standard Proctor Density. Where filter fabric is specified to control soil migration, the seams should be overlapped a minimum of 300 mm.

For detailed gabion characteristics and installation procedures, request specifications and instructions directly from manufacturers.

BIBLIOGRAPHY

AASHTO, *Standard Specifications for Highway Bridges,* Section 5 - Div. 1 and Section 7 Div. II, American Association of State Highway and Transportation Officials, 444 N. Capitol St. N.W., Ste 249, Washington, D.C. 20001.

AASHTO, *LRFD Bridge Design Specifications,* American Association of State Highway and Transportation Officials, 444 N. Capitol St. N.W., Ste 249, Washington, D.C. 20001.

CHAPTER 14

SHEET STEEL PILING

INTRODUCTION

Steel sheet piling is traditionally furnished as a hot rolled section that can be interlocked together to form continuous walls. Steel sheeting or sheet piling is used in the construction industry on a world wide basis where bank erosion is to be prevented or earth retained, as in the case of trenches, cofferdams, bulkheads and cutoff walls. Comparatively lightweight cold-formed steel sheet sections are being economically used for these purposes where the depths and loads do not exceed strength limitations.

The advantages of steel sheeting include:

1. Units to suit various service conditions.
2. Easy to handle because of light weight and size.
3. Ease and speed of driving.
4. Ample strength for many applications.
5. Resistance to damage to the driving and leading edges.
6. Ability to be readily salvaged and re-used frequently.
7. Ease of storage and shipping.
8. Nestable for compactness in shipping.

Typical cold-formed sheet steel piling products are illustrated in Table 14.1. There are many others types to choose from for other applications. Consult manufacturers for further information.

DRIVING

A hand maul or light pneumatic hammer is satisfactory for driving steel sheeting in a trench where the bottom can be excavated ahead of driving and when the earth loads on the sheeting are light.

Cold-formed sheet steel piling prevents erosion.

If the sheeting is to be driven in advance of excavation or the side pressures are heavy, then heavier equipment, such as a vibrating driver, drop hammer, or a pneumatic pile-driver, will be needed. Under these conditions, the use of heavy equipment will allow for faster driving with less injury to the sheeting. Light equipment for this type of driving tends to batter the top edge of the sheeting and slows driving.

The driving equipment must be capable of supplying ample foot-pounds of energy to move the sheeting easily. A driver that strikes a heavy blow with a low velocity at impact will do the most work with least damage to the sheeting. A driving head can often be supplied by the sheeting manufacturer to aid in driving. A long, heavy sheet pile requires more energy to start it moving than a light, short section.

Soil friction on the sheeting surfaces and force required for penetration are difficult to evaluate. Certainly, selecting the appropriate driving equipment requires knowledge of local conditions and experience with various types of equipment. Vibratory equipment has been found suitable for driving sheeting in some granular soils.

SHORE PROTECTION

Lightweight, inexpensive steel sheeting is now offered as a shore protection package for use in protecting lakeshores and river banks in fresh water applications. Complete with top caps, walers and prefabricated deadmen, as required, these products offer excellent, aesthetic solutions to shore protection concerns.

PROTECTIVE COATINGS

Where the sheeting is permanent, its structural strength and aesthetic appearance can be protected with galvanized or aluminized Type 2 coatings for long life and performance.

Table 14.1

Sectional properties for sheet steel piling

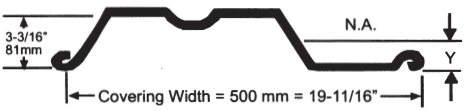

Thickness, mm (in)	Area for Section Width (500mm), mm² (in²)	Y, mm (in)	Moment of Inertia per Section Width (500 mm), mm⁴ (in⁴)	Modulus per Section Width (500 mm), mm³ (in³)	Section Modulus per unit length of Wall, mm³/m (in³/ft)	Weight (Fascial Area), kg/m² (lb/ft²)
3.5 (.135)	2375 (3.68)	42.4 (1.67)	2.57×10^6 (6.17)	6.06×10^4 (3.70)	121.1 (2.25)	38.2 (7.82)
4.2 (.164)	2905 (4.50)	42.8 (1.69)	3.15×10^6 (7.57)	7.36×10^4 (4.49)	147.2×10^3 (2.74)	46.7 (9.56)

Table 14.1 Sectional properties for sheet steel piling *continued...*

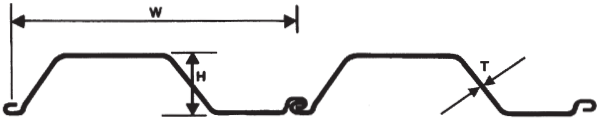

Thickness, T, mm (in)	Height, H, mm (in)	Nominal Width, W, mm (in)	Area for Section Width (500mm), mm² (in²)	Moment of Inertia per unit length of Wall, mm⁴/m (in⁴/ft)	Section Modulus per unit length of Wall, mm³/m (in³/ft)	Weight (Fascial Area), kg/m² (lb/ft²)
4.1 (0.164)	105 (4.12)	500 (19.7)	2830 (4.39)	9.61×10^{6} (7.02)	178×10^{3} (3.30)	44.7 (9.17)

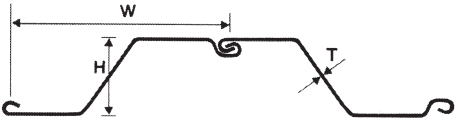

Thickness, T, mm (in)	Height, H, mm (in)	Nominal Width, W, mm (in)	Area for Section Width (610mm), mm² (in²)	Moment of Inertia per unit length of Wall, mm⁴/m (in⁴/ft)	Section Modulus per unit length of Wall, mm³/m (in³/ft)	Weight (Fascial Area), kg/m² (lb/ft²)
7.5 (.295)	221 (8.72)	610 (24.0)	6650 (10.3)	92.5×10^{6} (67.7)	839×10^{3} (15.6)	85.9 (17.6)

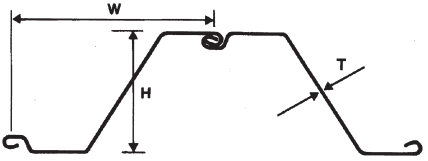

Thickness, T, mm (in)	Height, H, mm (in)	Nominal Width, W, mm (in)	Area for Section Width (673mm), mm² (in²)	Moment of Inertia per unit length of Wall, mm⁴/m (in⁴/ft)	Section Modulus per unit length of Wall, mm³/m (in³/ft)	Weight (Fascial Area), kg/m² (lb/ft²)
12.0 (0.472)	418 (16.47)	673 (26.5)	13.87×10^{3} (21.5)	579×10^{6} (424)	2.76×10^{6} (51.5)	171 (35.0)

Cold-formed steel sheet piling serves as end wall for CSP.

DEFINITION OF TERMS

Many terms in this handbook are common to drainage, highway, and other related design and construction disciplines. Most of these are defined, described or illustrated where they appear in the book. However, to aid the engineering student and to clear up unfamiliar words for the professional engineer, a number of terms are here defined even though they may be elementary. For other unfamiliar terms, many are keyed in the index of this book, particularly where the definitions already appear in the text.

Sources:

1. Brown, V. J. and Runner, D. G., "Engineering Terminology", Gillette Publishing Co., Chicago, IL, 439 pp.
2. American Society of Civil Engineers, "Nomenclature for Hydraulics, Abbreviations, Units of Measurement, Symbols and Glossary", Task Force Report, 1801 Alexander Bell Drive, Reston, VA 20191-440, 1962, 501 pp.
3. American Society for Testing and Materials, "Standard Specifications", 100 Barr Harbor Dr., PO Box C700, West Conshohocken, PA 19428-2959.
4. American Iron and Steel Institute, "Modern Sewer Design", 1101 17th Street, NW, Suite 1300, Washington, DC 20036-4700.
5. Corrugated Steel Pipe Institute, "Glossary of Drainage and Transportation Design Terminology", 652 Bishop St. N., Unit 2A, Cambridge, Ontario N3H 4V6.
6. Manufacturer's literature.

A

abrasion – Wear by hydraulic traffic.

abutment – A wall supporting the end of a bridge or span, and sustaining the pressure of the abutting earth.

aerial sewer – An unburied sewer (generally sanitary type) supported on pedestals or bents to provide a suitable grade line.

aggradation – Progressive raising of the general level of a channel bed over a period of years by an accumulation of sediment.

allowable headwater elevation – The maximum permissible elevation of the headwater at a culvert at the design discharge.

allowable headwater depth – The depth corresponding to the allowable headwater elevation, measured from the invert at the first full cross-section of the culvert.

allowable fish passage velocity – The maximum velocity fish can tolerate when passing upstream through a culvert.

anchor bolt – A foundation bolt; a drift spike, or any other device used for holding any mechanism or structure down. It may or may not be threaded.

angle – A rolled piece of steel having a cross section shaped into a right angle.

angle of repose – The angle which the sloping face of a bank of loose earth, or gravel, or other material makes with the horizontal.

anti-seep collar – see diaphragm

apron – Protective material laid on a stream bed to prevent scour at a culvert outlet, abutment, pier, toe of a slope, or similar location. (see also end section)

arch – Structural plate corrugated steel pipe formed to an arch shape and placed on a footings. The invert may be the natural stream bed or any other suitable material but is not integral with the steel arch.

armor stone – A layer of stone protecting erodible material underlying the bed of a channel.

arching – The transfer of pressure or load between the soil masses adjacent to and above the conduit which move relative to one another. Positive arching is that which results in the transfer of loads away from the conduit; negative arching produces the opposite effect.

asphalt coating – Dipping corrugated steel pipe products, in a bath of hot asphalt for protection.

B

backfill – Earth or other material used to replace material removed during construction, such as in culvert, sewer and pipeline trenches and behind bridge abutments and retaining walls. Also refers to material placed in bin-walls or between an old structure and a new lining.

backfill density – Percent compaction for pipe backfill (required or expected).

backwater – The rise of water level upstream due to an obstruction or constriction in the channel.

backwater curve – Term applied to the calculation of the piezometric line from the obstruction.

baffle – A flow interference structure usually in the form of a low weir, which is attached to a culvert invert and extends partially or entirely across the culvert width. Baffle designs are constructed to aid in fish passage through the culvert barrel, or the channel.

band coupling – A collar or coupling which fits over adjacent ends of pipe to be joined, which when drawn tight, holds the pipe together by friction or by mechanical

means. Types commonly available include: universal, corrugated. semi-corrugated, channel, flat, wing channel and internal expanding.

base (course) – A layer of specified or selected material of planned thickness, constructed on the subgrade (natural foundation) or subbase for the purpose of distributing load, providing drainage, or upon which a wearing surface or a drainage structure is placed.

batter – The slope of inclination from a vertical plane - as the face or back of a wall.

bedding – The earth or other material on which a pipe or conduit is supported.

bedding – The prepared portion of the engineering soil on which the base of the closed conduit wall is placed.

bed load – Sediment in the flow that moves by rolling, sliding, or skipping along the bed; and is essentially in contact with the stream bed.

bend section – Intersection of the fall slope and barrel slope in a slope-tapered inlet.

bent protection system – Casing of structural plate or corrugated steel pipe installed to protect pile or framed bents.

berm – The space between the toe of a slope and excavation made for intercepting ditches or borrow pits.
- An approximately horizontal space introduced in a slope.
- Often used for word "shoulder" in road work.

bevelled end – The termination of the wall of a conduit, cut at a plane inclined to the horizontal.

bevelled inlet – A large chamfer or flare on the inlet edge of a culvert to improve the inlet coefficient k_e. Usually cast-in-place.

binwall – A series of connected bins, generally filled with earth or gravel to serve as a retaining wall, abutment, pier, or as protection against explosions or gunfire (See Chapter 13).

bituminous (coating) – Of or containing bitumen; as asphalt or tar.

blue-green concept – The provision of stormwater detention ponds or lakes as an integral part of a park or greenbelt. In urban design, culvert sizing at roadways may be used to create temporary storage in the channel.

boring – An earth-drilling process used for installing conduits or pipelines.

box beam – Steel guardrail consisting of box sections cold formed from steel tubes.

box culvert – Drainage structure fabricated with deep corrugated structural plate, reinforced with circumferential ribs or corrugated plates having straight side legs bolted to corner plates, curved to a small radius and a crown of large radius plates.

buoyancy – The power of supporting a floating body, including the tendency to float an empty pipe (by exterior hydraulic pressure).

buried structure – A structure with one or more conduits, which is designed by taking account of the interaction between the conduit wall and engineered soil.

burst speed – The swimming speed a fish can maintain for only a few seconds or for short distances without gross reduction of performance.

C

caisson – A watertight box or cylinder used in excavating for foundations or tunnel pits - to hold out water so concreting or other construction can be carried on.

camber – An adjustment required in the longitudinal profile of the bedding to compensate for post-construction settlement.

cantilever – The part of a structure that extends beyond its support.

catch basin – A receptacle for diverting surface water to a sewer or subdrain, having at its base a sediment bowl to prevent the admission of grit and other coarse material into a sewer.

cathodic protection – Preventing corrosion of a pipeline by using special cathodes (and anodes) to circumvent corrosive damage by electric current.
- Also a function of zinc coatings on iron and steel drainage products. Galvanic action.

channel treatment – Refers to the design to improve flow, or to reduce scour and/or erosion in the channel above or below the culvert. This may include debris barriers before the inlet; paving or rip-rap to accelerate or decelerate flow velocity; training walls to direct flow; channel linings such as gabions, gobimats, special grasses, etc.; special inlet designs to improve or upgrade culvert capacity; special outlet designs for velocity scour prevention and/or energy dissipation; tailpond level control weirs for fish passage; and fish ladders above or below the culvert, or inside the culvert barrel.

chute – A steeply inclined channel for conveying water from a higher to a lower level.

closed invert culvert – A culvert having an invert which is structurally integral with the walls.

coefficient of runoff – Percentage of gross rainfall which appears as runoff. Also ratio of runoff to depth of rainfall.

cofferdam – A barrier built in the water so as to form an enclosure from which the water is pumped to permit free access to the area within.

cohesive soil – A soil that when unconfined has considerable strength when air-dried, and that has significant cohesion when submerged.

collar – An end treatment for a culvert, usually consisting of a concrete ring surrounding a cut-end treatment. The collar is usually attached to a cutoff wall.

combined sewer – A sewer that carries both storm water and sanitary or industrial wastes.

compaction – The process of soil densification, at a specified moisture content, by the application of pressure through rolling, kneading, tamping, rodding, or vibratory actions of mechanical or manual equipment.

competent velocity – The velocity of water which can just move a specified type or size of material on a streambed.

conduit – A pipe or other opening, buried or above ground, for conveying hydraulic traffic, pipelines, cables or other utilities.

conduit wall – The corrugated metal plate shell or reinforced concrete wall lining the conduit.

consolidation – The gradual reduction in a volume of a soil mass resulting from an increase in compressive stress.

connection – An overlapped bolted joint between two structural metal plates, or a joint between two reinforced concrete elements.

conventional culvert – A closed invert culvert having no major inlet improvements such as a side-tapered or slope-tapered inlet. It may incorporate minor improvements such as, cut-end treatments, bevelled edges, wingwalls, a fall, or a prefabricated end section.

conveyor conduit – Corrugated steel structures of varying diameters used to enclose a conveyor system.

conveyor cover – Half circle steel arch sections supported on band sheets which are bolted to the conveyor frame.

conveyor tunnel – Usually a large diameter structural plate pipe installed to enclose a materials handling system. Commonly used under aggregate piles.

cooling water intake or discharge lines – A large diameter conduit carrying cooling water to a power plant and heated return water to the source. These lines are usually subaqueous requiring special underwater installation by divers.

corrugated steel pipe (CSP) – Metallic coated sheet steel formed to finished shape by the fabricator:

riveted – A corrugated steel pipe with annular corrugations, fabricated from cut-to-length corrugated steel sheet with lapped longitudinal and circumferential seams fastened with rivets.

double wall – A full circular cross-section pipe helically formed with an outer corrugated shell and integrally seam-connected with an inner liner of smooth or uncorrugated steel sheet.

helical – Corrugated steel pipe with helical corrugations, fabricated from coiled corrugated steel pipe sheet, with a continuous helical seam, either lock or welded.

spiral rib – A full circular cross-section pipe with a single thickness of smooth sheet, fabricated with helical ribs projecting outwardly.

corrugated steel pipe sheet (CSP sheet)– A mill product in sheet or coil form for fabricating riveted or helical corrugated steel pipe products, metallic-coated by the continuous hot-dip process.

cost effective – Answering the purpose of providing the optimum effect at the most reasonable cost.

coupler – See band coupling.

critical density – Zone separating the levels of backfill compaction that will and will not prevent deflection failure of a pipe (between 70% and 85% standard density).

critical depth – Depth of flow at which specific energy is a minimum for a given flow. Water depth in a conduit at which certain conditions of maximum flow will occur. Other conditions are: (1) the conduit is on a critical slope with water flowing at critical velocity, (2) there is an adequate supply of water.

critical flow – A condition that exists at the critical depth, and where the sum of the velocity head and static head is a minimum. Also, that flow which has a Froude number of one.

critical migration delay period – The maximum delay fish can tolerate during the spawning migration without harmful biological consequences.

critical slope – The slope at which a maximum flow will occur at minimum velocity. The slope or grade that is exactly equal to the loss of head per foot resulting from flow at a depth that will give uniform flow at critical depth.

critical velocity – Mean velocity of flow when flow is at critical depth.

crown – The highest point on a transverse section of conduit. (Also see soffit and obvert.) Also the highest point of a roadway cross section.

culvert – A culvert is a conduit for conveying surface water through an embankment. It is a "grade separation" for water and the traffic or facility above it. The embankment may be for a highway, railway, street, industrial roadway, spoil bank, dam or levee.

A distinction is made between culverts and storm sewers, mostly on the basis of length and the types of inlets and outlets. Distinction is also made between culverts and bridges in that the top of a culvert does not serve as a road surface, whereas a bridge is a definite link in a roadway surface. Culverts larger than about 5 to 8 meter span are usually referred to as "soil-steel bridges", to connote the need for greater engineering involvement.

culvert uplift – The upward movement of a culvert end, resulting from hydraulic and buoyancy forces.

cut-end treatment – Refers solely to what is done to the steel inlet or outlet. May be standard pipe bevels, or pipe-arch bevels, or skew cuts. Combinations of bevels and skews are not recommended practice. (See end treatment and slope treatment.)

cutoff wall – A wall intended to prevent seepage or undermining (see diaphragm). Usually a buried vertical wall below the end of a culvert.

D

deadman – Buried anchorage for a guy, cable, etc. Commonly used in retaining walls, cutoff walls, piling and other designs.

debris – Any material including floating woody materials, and other trash, suspended and moved by a flowing stream.

degradation – The progressive general lowering of a stream channel by erosion, other than that caused by a constriction.

depression storage – The fraction of precipitation that is trapped in depressions on the surface of the ground, with the only outlet through infiltration or evaporation.

depth-of-cover – The vertical distance between the profile grade and the crown. Serves as basis for calculation of dead load on structure.

depth-of-scour – The depth of material removed from a stream bed by scour, measured below the original bed elevation.

design discharge – A quantity of flow that is expected at a certain point as a result of a design storm, or flood frequency. Usually expressed as a rate of flow in cubic feet per second, or cubic metres per second. Also the discharge which a structure is designed to accommodate without exceeding the adopted design constraints.

design frequency – The recurrence interval for hydrologic events used for design purposes. As an example, a design frequency of 50 years means a storm of a magnitude that would be expected to recur on the average of once in every 50 years.

design life – The length of time for which it is economically sound to require a structure to serve without major repairs, or replacement.

design storm – A precipitation event that, statistically, has a specified probability of occurring in any given year (expressed either in years or as a percentage). May also be a particular storm that contributes runoff for which the drainage facilities were designed to handle.

design thickness – Base metal thickness of metallic coated sheet used for design calculations.

detention storage – Temporary storage of excess runoff in surface ponds, or underground tanks, for the purpose of attenuating excess runoff.

detritus – Rock, gravel, sand, silt or other materials carried by flowing water.

diameter – Inside diameter, measured between inside crests of corrugations.

diaphragm – A metal collar at right angles to a drain pipe for the purpose of retarding seepage or the burrowing of rodents. Often specified on pipe spillways, or other drainage structures designed to operate under static head, or head ponding at the inlet.

dike – An embankment or wall constructed to prevent flooding.

discharge – The actual volume of water flowing from a drainage structure per unit of time. Usually measured in cubic feet per second or cubic metres per second.

ditch check – Barrier placed in a ditch to decrease the slope of the Bowline and thereby decrease the velocity of the water.

drainage – Interception and removal of ground water or surface water, by artificial or natural means.

drop structure – A structure in a channel or conduit which permits water to drop to a lower level.

dry well – A steel catch basin with open bottom and perforated walls, that is used to store surface runoff for infiltration, or recharge, into the ground.

E

EOS – Equivalent Opening Size, a major parameter in the selection of a filter fabric for use in filtration and separation.

effluent – Outflow or discharge from a sewer or sewage treatment equipment.

ellipsed – With reference to structural plate corrugated steel pipe, factory-formed to an elliptical shape. May be vertical or horizontal ellipse. Term "elongated" usually refers to a 5% vertical ellipse shape.

embankment (or fill) – A bank of earth, rock or other material constructed above the natural ground surface.

embedment – The depth to which a culvert invert is embedded below the natural stream bed.

end area – The area calculated on the basis of inside diameter (see diameter); or the available flow area through the conduit.

end section – Flared metal attachment on inlet and outlet of a culvert to prevent erosion of the roadbed, improve hydraulic efficiency, and improve appearance.

end treatment – The overall design of a culvert inlet and/or outlet. This may involve channel treatments, cut end treatments, slope treatments, headwalls, anchorage, etc.

energy dissipator – A structure used to dissipate the energy possessed by high-velocity flow at the outlet of a culvert.

energy grade line – A hydraulic term used to define a line representing the total amount of energy available at any point along a water course, pipe, or drainage structure. Where the water is motionless, the water surface would coincide with the energy grade line. As the flow of water is accelerated the water surface drops further away from the energy grade line. If the flow is stopped at any point the water surface returns to the energy grade line. The energy grade line is established by adding together the potential energy at the water surface elevation (referenced to a datum); and the kinetic energy (usually expressed as a velocity head), at points along the channel or conduit profile.

energy gradient – Slope of a line joining the elevations of the energy head of a stream. (See Chapt. 4, Hydraulics)

energy head – The elevation of the hydraulic gradient at any section, plus the velocity head.

engineered soil – A selected soil of known properties placed around a conduit in a prescribed manner.

entrance head – The hydraulic head required to cause flow into a conduit; it includes both entrance loss and velocity head.

entrance loss – The head lost in eddies and friction at the conduit inlet.

equalizer – A culvert placed where there is no channel but where it is desirable to have standing water at equal elevations on both sides of a fill.

equivalent diameter – The diameter of a round corrugated steel pipe from which a pipe-arch or other shape is formed.

erosion – Wear or scouring caused by hydraulic traffic or by wind.

F

fabricator – A manufacturer of corrugated steel pipe or structural plate corrugated steel pipe product, or other steel construction products. Premises of a manufacturer are referred to as the fabricating plant.

face section – The upstream face of the enlarged and fully enclosed opening of an improved inlet.

fall – A steeply inclined length of channel in or immediately upstream from a culvert inlet to improve hydraulic capacity.

fan duct – Mine ventilation system in which a conduit extends from the ventilating fan to the portal of the fresh air tunnel or air shaft.

fiber-bonded protected corrugated steel pipe – A mill product in which an aramid nonwoven fabric is embedded in the zinc coating, followed by asphalt coating.

filter – Granular material placed around a subdrain pipe to facilitate drainage and at the same time strain or prevent the admission of silt or sediment.

filter cloth – See geotextiles.

fishway – A facility to permit fish to pass an obstruction with minimum stress.

flap gate – A hinged watertight flap covering the outlet of a culvert to allow outflow from the culvert but prevent backflow resulting from higher flood stages downstream.

flexibility factor (FF) – Relative elastic deflection of a conduit.

flood – A relatively high flow, in terms of either water level, or discharge.

flood plain – The relatively level land which adjoins a water course, and which is subject to periodic flooding, unless protected artificially by a dike, or similar structure.

flood routing – An analytical technique used to compute the effects of system storage (i.e. detention ponds); and system dynamics on the timing and shape of a flood wave at recessive points along a stream or channel.

flow area – See end area.

flume – An open channel or conduit of metal, concrete or wood, on a prepared grade, trestle or bridge.

ford – A shallow place where a stream may be crossed by traffic.

foundation – That portion of a structure (usually below the surface of the ground) which distributes the pressure to the soil or to artificial supports. Footing has similar meaning.

foundation drain – A perforated CSP, or a system of CSP sub-drains which collects ground water from the foundation or footings or engineered structures, for the purpose of draining unwanted waters away from such structures.

freeboard – The height from a design water level to the top of an embankment, roadway, dam or wall.

free field overburden pressure – The vertical earth pressure at a level in a semi-infinite mass, due to the load of earth and other materials above that level.

free outlet (as pertaining to critical flow) – Exists when the backwater does not diminish the discharge of a conduit.

free water – Water (in soil) free to move by gravity (in contrast to capillary or hydroscopic moisture).

frost-susceptible soil – A soil that tends to heave excessively under frost action with the consequence of a severe degradation in strength and stiffness.

G

gabion – A steel wire mesh basket filled with stones or broken concrete, and forming part of a larger unit of several such baskets, usually for channel or end treatment, for erosion or scour control, or other purposes.

gauge – Reference system for thickness of metal sheets or wire (and bearing a relation to the weight of the metal).

gaskets – A thin sheet of rubber, sheet metal, or other materiel forming a joint between two pieces of metal to prevent leakage. Gaskets for corrugated steel pipe are O-ring, sleeve, or strip type.

geotextiles – Woven or nonwoven engineering fabrics that act as separators to keep soil or fines out of a subdrainage piping system while serving as a filter to allow free flow of water.

gradation – Sieve analysis of aggregates.

grade – Profile of the center of a roadway, or the invert of a culvert or sewer. Also refers to slope, or ratio of rise or fall of the grade line to its length. (Various other meanings.)

grade separation – A corrugated steel structure, usually structural plate, installed to allow passage of a road or railroad over another road or railroad. An underpass.

gradient (slope) – The rate of rise or fall of a grade-expressed as a percentage or ratio as determined by a change in elevation to the length.

granular – Technical term generally describing the uniformity of grain size of gravel, sand or crushed stone.

groin – A jetty built at an angle to the shore line, to control the waterflow and currents, or to protect a harbor or beach.

ground water table (level) – Upper surface of the zone of saturation in permeable rock or soil. (When the upper surface is confined by impermeable rock, the water table is absent.)

grout – A fluid mixture of cement, sand, and water that can be poured or pumped easily.

guiderail – A barrier located along the edge of a roadway shoulder for the purpose of guiding errant vehicles onto the roadway.

H

haunch – In a metal-soil structure, the portion of the conduit wall between the spring line and the top of the bedding or footing; or

- in a metal-box structure, the curved portion of the conduit wall between the sidewall and top, sometimes referred to as the shoulder;
- in a concrete box section, the stiffness corner portions.

head (static) – The height of water above any plane or point of reference. (The energy possessed by each unit of weight of a liquid, expressed as the vertical height through which a unit of weight would have to fall to release the average energy possessed.) See Chapt. 4, Hydraulics.

headwall – A wall (of any material) at the end of a culvert or drain to serve one or more of the following purposes: to protect fill from scour or undermining, increase hydraulic efficiency, divert direction of flow, and/or serve as a retaining wall. Usually a separate vertical cutoff wall at the inlet, or outlet. May be square end, or wing wall, or cribwall design of varying heights; and in a steel, concrete, or masonry. Usually constructed or installed before or during backfill. A partial headwall is less than the full rise of the culvert. (See also end treatment, slope treatment, cutoff wall, cut-end treatment and improved inlet.)

headwater elevation – The water level upstream from a structure .

heat manifold – A corrugated steel pipe installed in an aggregate pile to allow passage of heat to help obtain satisfactory working and setting properties in concrete.

height of cover (HC) – Distance from crown of a culvert or conduit to bottom of flexible pavement or top of rigid pavement for highways and bottom of tie for railways.

high profile arch – A corrugated steel structure with a relatively high rise in relation to span.

hook bolt – A bolt having one end in the form of a hook.

horizontal ellipse – A long span corrugated steel structure with the major diameter horizontal.

hydraulic gradient – A line which represents the relative force available due to the potential energy available. This is a combination of energy due to the height of the water and internal pressure. In an open channel, the line corresponds to the water surface. In a closed conduit, if several openings are placed along the top of the pipe and open end tubes inserted, a line connecting the water levels in the tubes represents the hydraulic grade line.

hydraulic jump – Transition of flow from the rapid to the tranquil state. A varied flow phenomenon that produces a rise in elevation of backwater flow surface. A sudden transition from supercritical flow to subcritical flow, conserving momentum and dissipating energy.

hydraulic radius – The cross-sectional area of a stream of water divided by the length of that part of its periphery in contact with its containing conduit; the ratio of area to wetted perimeter.

hydraulics – That branch of science or engineering which treats the mechanical properties of water or other fluid motion.

hydrogen ion (pH) – Refers to acidity or alkalinity of water or soil. An ion is a charged atom or group of atoms in solution or in a gas. Solutions contain equivalent numbers of positive and negative ions.

hydrograph – A graph of runoff rate, inflow rate, or discharge rate, versus time.

hyteograph – A graph showing average rainfall, rainfall intensities, or rainfall volume over specified areas, with respect to time.

I

ice jam – The choking of a stream channel by the piling up of drift ice at an obstruction or water course constriction.

icing – The gradual accumulation of ice in a channel or culvert, resulting from freezing of ground water seepage over a period of weeks or months.

impervious – Impenetrable. Completely resisting entrance of liquids.

improved inlet – A culvert inlet incorporating geometry refinements, other than those used in conventional culvert practice, for the purpose of improving the culvert capacity. (See headwall.)

infiltration – The passage of water into the soil. The term is also used to refer to groundwater entering a sewer system through joints, manholes, etc. infiltration is not usually desirable in sanitary sewer systems, but may be desirable in urban storm drain systems to control ground water table, and protect roadway pavements.

inflow – The water discharged into a sewer system from all possible sources, but not infiltration.

inlet control – A hydraulic term which indicates that the capacity of the conduit is governed by the quantity of water which the inlet will accept, due to its size and geometry, and the nature and depth of the head pond. Flow control at a culvert in which the capacity is governed by the inlet characteristics and headwater depth only.

inlet time – The time required for runoff to flow from the most remote point of a drainage area to a point where it enters the sewer.

interaction (soil-steel) – The division of load carrying between pipe and backfill and the relationship of one to the other.

intercepting drain – A ditch or trench filled with a pervious filter material around a subdrainage pipe.

invert – The lowest point of the conduit at a transverse section.
- The bottom segment of the conduit wall.

invert paving – The bottom portion of a pipe conduit that is paved with a material to improve flow, erosion and corrosion characteristics. Asphalt is commonly used for CSP products, and wire mesh and concrete for larger structural plate structures.

inverted pear – A long span structure in which the rise is the major dimension.

J

jacking (for conduits) – A method of providing an opening for drainage or other purposes underground, by cutting an opening ahead of the pipe and forcing the pipe into the opening by means of horizontal jacks.

L

lateral – A conduit diverting water from a main conduit, for delivery to distributaries; a secondary ditch.

lift – One layer of soil placed in the backfilling process.

liner plate – Formed steel unit used to line or reinforce a tunnel or other opening .

lock seam – Helical seam in a pipe, formed by overlapping or folding the adjacent edges.

longitudinal direction – The direction of the conduit axis which is parallel to the locus of the crown.

low profile arch – A long span structure in which the span is the major dimension.

M

major system – The route followed by storm runoff when the minor system is either inoperative or inadequate. It generally consists of roads, swales, and major drainage channels. The major system is generally designed to provide 25 to 100 yr. protection against surface flooding.

manhole – Opening from street surface to provide entry for inspection and cleaning of sewer lines.

Manning's Formula – An equation for the value of coefficient C in the Chezy Formula, the factors of which are the hydraulic radius and a coefficient of roughness.

mean velocity – Average velocity within a stream or conduit cross section.

median – The portion of a divided highway separating roadways.

median barrier – A double-faced guiderail in the median or island dividing two adjacent roadways.

metallic coating – A zinc or aluminum coating applied to corrugated steel pipe for corrosion protection.

minimum depth of cover – The minimum allowable depth of cover as specified in the various clauses as they relate to the different types of buried structures.

minor system – The traditional storm runoff design of storm sewers, street gutters, roof leader connections, foundation drains, etc.-designed to convey runoff from frequent, less intense storms, to eliminate or minimize inconvenience in the area to be developed. (See major system.)

miter cut – An angle in the barrel. A wedge section is cut from the barrel, and the barrel welded to provide a change in alignment. Permits pipe curvature, or changes in grade and/or alignment.

mitered end – A culvert end the face of which conforms roughly with the face of the embankment slope. (See also the preferred term "bevelled end".)

modified Proctor density – The maximum dry density of a soil determined in accordance with ASTM Standard D1557.

modulus of soil stiffness – The ratio of the radial contact pressure to the radial strain in the soil, having values specified in Table 6.6.

N

nestable pipe – Half round corrugated steel pipe segments joined by interlocking notches or mating flanges. Primarily used for encasing existing utility or other lines.

nominal thickness – The order thickness for the steel sheet or plate.

normal design flood – The design flood used for the hydraulic design of structures, in the absence of imposed criteria, such as the regulatory flood.

normal water level – The average summer water level. The free surface associated with flow in natural streams.

O

obvert – The highest point of the conduit at a transverse section, or the top segment of the metal conduit wall.

open channel – A drainage course which has no restrictive top. It is open to the atmosphere and may or may not permit surface flow to pass over its edge and into another channel in an unrestricted manner. In many cases where dikes or berms are constructed to increase channel capacity, entrance of surface waters is necessarily controlled.

outfall (outlet) – In hydraulics, the discharge end of drains and sewers.

outlet control – Flow control at a culvert in which the capacity is governed principally by the barrel roughness, length and slope, and in some cases by the tailwater.

overfill – The soil placed above and beyond the required structural backfill.

P

parapet – The wall on top of an abutment extending from the bridge seat to the underside of the bridge floor and designed to hold the backfill.

paved invert – A smooth asphalt pavement that completely fills the corrugations of the lower segment of a pipe; intended to provide resistance to erosion, and to improve flow.

pear – See inverted pear.

perforated pipe – A corrugated steel pipe product with perforations completely through the pipe walls.

fully perforated – A pipe with perforations around the periphery, usually for recharge to ground of storm water or for ventilation of agricultural produce.

invert-perforated – A pipe with perforations in the lower segment, usually for subdrainage.

performance curve – A plot of discharge versus headwater elevation or depth at a culvert.

periphery – Circumference or perimeter of a circle, ellipse, pipe-arch, or other closed curvilinear figure.

permeability – A property of soils which permits free passage of any fluid. Permeability depends on grain size, void ratio, shape and arrangement of pores. Often referred to as penetrability.

pervious – Applied to material through which water passes relatively freely, such as sands and gravels.

pile – A member driven or jetted into the ground and deriving its support from bearing on the underlying strata and/or by the friction of the ground on its surface. (See also sheeting.)

pipe – A culvert having a non-rectangular cross-section, often assumed to be circular unless specified otherwise.

pipe-arch – A conduit consisting of an arched upper and side portions, which is structurally continuous with an invert whose radius of curvature is greater than that of the other portions.

piping – Subsurface erosion caused by the movement or percolation of water through fill, or natural ground.
plate – A flat-rolled steel product. See structural plate.

polymeric coating – A plastic coating, bonded to one or both sides of the CSP sheet, prior to fabricating into pipe.

ponding – The use of water to hasten the settlement of an embankment. It requires the judgment of a soils engineer. In hydraulics, ponding refers to water backed up in a channel or ditch as the result of a culvert of inadequate capacity or design to permit the water to flow unrestricted.

precipitation – Process by which water in liquid or solid state (rain, sleet, snow) is discharged out of the atmosphere upon a land or water surface.

profile grade – The top of the finished granular base of the centre-line of the highway or railway.

projecting end – A culvert end which protects from the face of the embankment.

protective coating – A coating applied to the pipe in addition to the standard zinc protection, such as asphalt, polymeric, and aramid fibers.

R

rational method – An empirical approach to estimate storm runoff, by use of the formula Q = CIA, where C is a coefficient describing the runoff potential of a drainage area. I is the rainfall intensity during the core time of concentration and A is the drainage area.

re-entrant arch – An arch with haunches or spring lines lying above the footings.

reformed end – Annular corrugations rolled onto the ends of helically corrugated steel pipe.

regulatory flood – A flood designated for a specific site by a regulatory jurisdiction. or agency, generally for flood plain management purposes.

relief flow – A portion of a major flood which bypasses the main structure at a stream crossing, by flowing over the roadway, or through a relief bridge or culvert.

retaining wall – A wall for sustaining the pressure of earth or filling deposited behind it.

return period – The average period in years between occurrences of a discharge equalling or exceeding a given value.

revetment – A wall or a facing of wood, willow mattresses, steel units, stone, or concrete placed on stream banks to prevent erosion.

Reynolds' Number – A nondimensional coefficient used as a measure of the dynamic scale of a flow.

ring compression – The principal stress in a confined thin circular ring subjected to external pressure.

riprap – Rough stone of various sizes placed compactly or irregularly to prevent scour by water or debris.

rise – The maximum vertical clearance inside a conduit at a given transverse section, usually the centerline.

roadway (highway) – That portion of the highway including the shoulders, for vehicular use. A divided highway has two or more roadways. (railway) – That part of the right of way prepared to receive the track. (During construction the roadway is often referred to as the "grade.")

rodent gate – An appurtenance at the outlet end of a sub-drain or other drainage pipe that swings outwards to permit flow and detritus to pass, yet prevents the passage into the drainage network of rodents or other animals, whose nesting could block, and render inoperative, the drain system.

roof leader – A drain or pipe that conducts storm water from the roof of a structure downward and into a sewer for removal from the property, or onto or into the ground for seepage disposal.

roughness coefficient (n) – A factor in the Kutter, Manning, and other flow formulas representing the effect of channel (or conduit) roughness upon energy losses in the flowing water.

round pipe – A circular or elliptical pipe with its major diameter not exceeding 1.10 times the minor diameter.

runoff – That part of precipitation carried off from the area upon which it falls. Also the rate of surface discharge of the above. That part of precipitation reaching a stream, drain or sewer. Ratio of runoff to precipitation is a "coefficient" expressed decimally.

S

scour – The local lowering of a stream bed by the erosive action of flowing water.

> **general scour** – is that which occurs in a waterway opening as a result of obstruction of the flow.
>
> **local scour** – is that which occurs at a pier or abutment as a result of local obstruction to the flow.
>
> **natural scour** – is the scour of a stream bed resulting from natural phenomena, such as channel meandering.

seam – A joint between two structural steel plates formed by overlapping and bolting them together. Also the joint or lap of riveted CSP. Also the joint or weld for continuous helical-weld CSP. (See also lock seam.)

sediment – Soils or other materials transported by wind or water as a result of erosion.

seepage – Water escaping through or emerging from the ground along some rather extensive line or surface, as contrasted with a spring, the water of which emerges from a single spot.

service tunnel – A conduit connecting two buildings to provide more direct access for employees, products, materials, or utility lines.

shaft – A pit or well sunk from the ground surface into a tunnel for the purpose of furnishing ventilation or access to the tunnel.

sheathing – A wall of metal plates or wood planking constructed to maintain trench wall stability.

sheeting – A wall of metal plates or wood planking to keep out water, or soft or runny materials.

shoulder – The portion of the conduit between the crown and the spring line.

shoulder – The portion of the conduit wall between the crown and the spring line.

side tapered inlet – An "improved" inlet having an enlarged face area with the transition to the culvert barrel accomplished by tapering the sidewalls. Both the barrel and the enclosed inlet structure are on the same grade. Usually cast-in-place.

side wall – The vertical or nearly vertical portion of the conduit wall in a box culvert structure.

sill – A low wall placed transversely in a culvert or channel level with or slightly above the invert. Often used downstream of the culvert to maintain tailpond level.

sheet flow – Water flowing across a wide, flat paved area such as a highway or parking lot; may result from rainfall or melting ice or snow.

siphon (inverted) – A conduit or culvert with a U or V shaped grade line to permit it to pass under an intersecting roadway, stream or other obstruction .

skew (skew angle) – The acute angle formed by the intersection of the line normal to the centerline of the road improvement with the centerline of a culvert or other structure.

skew number – The angle between the highway centerline and the culvert centerline measured clockwise, and specified in increments of 5 degrees.

slide – Movement of a part of the earth under force of gravity.

slope-tapered inlet – A cast-in-place side-tapered inlet, incorporating a fall within the enclosed inlet structure.

slope treatment – Describes what is done to protect the embankment slope from

scour or erosion. May be vegetation (i.e. Bermuda grass); grouted masonry or rip-rap; a "donut" type concrete collar with entrance flare to improve the inlet coefficient, usually from the headwall up over the crown (and usually on bevel ends, with embedded hook-bolts in the casting); plus others. Always placed or constructed after backfill.

slotted steel pipe – Corrugated steel pipe with reinforced longitudinal slots at the crown. Used for interception of sheet flow. The system provides an inlet, runoff pipe and grate in a single unit. Pipe can be perforated for use as an underdrain.

smooth-lined asphalt – A smooth asphalt interior lining that completely fills the corrugations in an asphalt coated corrugated steel pipe. (See also spun lining.)

snap-through instability – A buckling mode whereby a section of the structure reverses the initial curvature.

soffit – The bottom of the top of a pipe. In a sewer pipe, the uppermost point on the inside of the structure. The crown is the uppermost point on the outside of the pipe wall.

soil liquefaction – Loss of strength of a soil resulting from the combined effects of vibrations and hydraulic forces, thereby causing the material to flow.

soil-steel structure – A bridge, comprised of structural steel plates and engineered soil, designed and constructed to induce a beneficial interaction of the two materials.

span – Horizontal distance between supports, or maximum inside distance between the sidewalls.

spelter – Zinc or galvanized coating on steel products.

spillway – A low-level passage serving a dam or reservoir through which surplus water may be discharged; usually an open ditch around the end of a dam, or a gateway or a pipe in a dam.

- An outlet pipe, flume, or channel serving to discharge water from a ditch, ditch check, gutter or embankment protector.

spread footing – A footing which transfers load directly to the underlying foundation material. Used in structural plate arches and box culverts.

spring line – The line of the outermost points of the sides of the conduit.
spun lining – An asphalt lining in a pipe, made smooth or uniform by spinning the pipe around its axis.

stable stream grade – The slope of a natural channel at which neither aggradation nor degradation occurs.

standard Proctor density – The maximum dry density of a soil determined in accordance with ASTM Standard D698.

steady flow – A flow in which the volume passing a given point per unit of time remains constant.

stiffener – A structural member, connected to the conduit wall to improve its strength and stiffness.

storage basin – Space for detention or retention of storm runoff water for controlled release during or following design storm. Storage may be upstream, downstream, offstream, onstream and/or underground.

storage bin – Built from heavy, curved corrugated steel plates. Used on construction sites and plant storage sides for coal, sand, gravel and other materials.

storm sewer – A sewer that carries only storm water, or clear water runoff.

stormwater management – A master plan, or systems approach to the planning of facilities, programs, and management organizations for comprehensive control and use of stormwater within a defined geographical area.

stream check – A barrier placed in a stream to decrease the slope of the Bowline and thereby the velocity of the water. It is provided with a throat or spillway for dropping the water to a lower level.

stream enclosure – A pipe or other conduit for carrying a stream underground paralleling a roadway or dividing otherwise useful land into smaller parts.

structural backfill – The engineered soil placed around the conduit in a controlled manner.

structural plate corrugated steel pipe – Hot-rolled sheets or plate, corrugated, custom hot-dipped galvanized, curved to radius, assembled, and bolted together to form pipes, pipe-arches, and other shapes.

subcritical flow – Flow at velocities less than critical, or with a Froude number less than one. In this state, the role played by gravity forces is more pronounced. so the flow has a low velocity, and is often described as steady, tranquil, or streaming.

sub drain – A previous backfilled trench containing a pipe with perforations or open joints for the purpose of intercepting ground water or seepage .

subdrainage – The control of groundwater. Subdrainage helps maintain stable subgrades and structure foundations, eliminates wet cuts and prevents frost heave.
subgrade – The surface of a portion of the roadbed on which paving, or railroad track ballast, or other structure is placed.

supercritical flow – Flow with a Froude number greater than one. In this state, the inertia forces become dominant, so the flow has a high velocity, and is usually described as rapid or shooting.

surcharge – The flow condition occurring in closed conduits when the hydraulic grade line is above the crown of the sewer.

T

tailwater – The water just downstream from a structure.

tailwater depth – The depth of water immediately downstream from a culvert, measured from the invert of the culvert outlet.

threading – The process of installing a slightly smaller pipe or arch within failing drainage structure.

throat section – The intersection of cast-in-place sidewall tapers and culvert barrel in a side-or slopetapered "improved" inlet.

thrust – The circumferential compressive force in the conduit wall, per unit length of the wall.

time of concentration – The time required for storm runoff to flow from the most remote point, of a drainage area to the point under consideration. It is usually associated with design storm.

toe drain – A subdrain installed near the downstream toe of a dam or levee to intercept seepage.

transverse section – A section in the vertical plane normal to the longitudinal direction.

trash rack – A pervious barrier constructed to catch debris, and prevent blockage of the inlet of a drainage conduit.

trunk (trunk line) – In a roadway or urban drainage system, the main conduit for transporting the storm waters. This main line is generally quite deep in the ground so that laterals coming from fairly long distances can drain by gravity into the trunk line.

tunnel lining – Added inner surface of a tunnel; can be concrete, brick, or steel. A bolted metal shell serving either as a permanent inner surface for a tunnel or as a form by which a concrete wall coating is built.

U

underdrain – See subdrain.

undermining – A process of scour by hydraulic action that progressively removes earth support from an engineered structure. Undermining is commonly found at the outlet of a culvert or sewer.

underpass – An opening under a roadway to allow pedestrians, livestock, or other traffic to pass in safety. Also an opening under a railroad or other roadway through which a street, highway, or railroad passes.

uniform flow – Flow in which the velocities are the same in both magnitude and direction from point to point along the stream or conduit, all stream lines being parallel.

unsteady flow – A flow in which the velocity changes with respect to both space and time.

utilidor – Utility corridor. See utility conduits.

utility conduits – Conduit installed for the protection of water, steam and gas lines, sewers, or power cables passing underneath a building, roadway, or other obstacle.

V

value analysis – Objective analysis of the features and benefits of corrugated steel pipe in relation to a specified alternate.

velocity head (symbol H_V) – For water moving at a given velocity, the equivalent head through which it would have to fall by gravity to acquire the same velocity.

vertically ellipsed pipe – An elliptical conduit with major diameter vertical and not less than 1.10 times the minor diameter.

ventilation ducts – A conduit installed to provide various degrees of ventilation to protect against health hazards arising from non-toxic gasses, heat, dust, or moisture.

void forms – A corrugated steel tube installed in the concrete deck of a bridge to reduce the amount of concrete used and the overall weight of the deck.

W

wale – Guide or brace of steel or timber, used in trenches and other construction.

washout – The failure of a culvert bridge, embankment or other structure resulting from the action of flowing water.

water course – A natural or artificial channel in which a flow of water occurs, either continuously or intermittently. Natural water courses may be either on the surface, or underground.

water table – The upper limit of the coating applied to the surfaces of portion of ground wholly saturated with water.

watershed – Region or area contributing to the supply of a stream or lake; drainage area, drainage basin, catchment area.

weir crest – The point of intersection of the upstream channel slope and the fall slope.

wetted perimeter – The length of the wetted contact between the water prism and the containing conduit, (measured along a place at right angles to the conduit).

Z

zero runoff increase – A concept in which the peak rate of storm runoff from a new urban development is limited to that which occurred prior to development.

zinc coating – A galvanic, barrier coating applied to the surfaces of steel sheet, plate, or other components.

SYMBOLS

Various disciplines of engineering, hydraulics, physics, chemistry, etc. have established standard symbols or letters to denote various factors or dimensions in formulas, tables, drawing and texts. Some of these are found in dictionaries; others have been published by technical associations. Some of the symbols used in this handbook are listed here. For others, reference should be made to sources such as are listed for the preceding Glossary.

Symbol	Definition or Use
a	Area, cross-sectional, culvert
a	Constant in an Intensity-Duration Frequency Curve
A	Area, cross-sectional, of waterway, m^2
A	Area of long span structure, m^2
A	Drainage area
A	Area of section, mm^2
A	Width of roadway surface or roadbed in determining culvert length
A	Required wall area
A	Cross-sectional area of flow in m^2 at right angles to the direction of flow
A	Area to be subdrained
A	Cross-sectional area of liner plate, mm^2/m
A	Cross-sectional area of a corrugated metal conduit wall per unit length, in the longitudinal direction, mm^2/mm
A_c	Partial flow area
A_c	Axle load during construction, kN
A_f	Factor used to calculate the thrust due to dead load in the conduit wall
A_r	Recurring annual amount
A_H	Horizontal acceleration ratio due to earthquake loading, equal to the zonal acceleration ratio, dimensionless.
A_L	Weight of a single axle of the CHBDC truck for D_h<3.6 m; or the combined weight of the two closely-spaced axles of the CHBDC truck for $D_h \geq 3.6$ m, kN.
A_V	Vertical acceleration ratio due to earthquake loading, equal to two-thirds the horizontal acceleration ratio, A_H, dimensionless
b	Constant in an Intensity-Duration Frequency Curve
b	Bottom width of a trapezoidal channel
b	Developed width factor
B	Invert to spring line
B	Slope width from roadway to top of culvert on a flat grade
B	Long span structure length, m
B_1	Slope width from roadway to top of upstream end of culvert on a steep grade

Symbol	Definition or Use
B_2	Slope width from roadway to top of downstream end of culvert on a steep grade
c	Constant in an Intensity-Duration Frequency Curve
c	Coefficient of roughness whose value depends on the surface over which water flows
cL	Centerline
C	Coefficient, runoff
C	Compression in pipe wall
C	Long span dimension between centers of inside radii
C	Ring compression, thrust, N/m
C	Elevation from bottom of culvert to top of roadway
C	Subsurface runoff factor, m^3/s
C_a	Recommended antecedent precipitation factor for the rational formula
C_d	Soil coefficient for tunnel liner
CO	Carryover design for slotted drain pipes
C_s	Axial stiffness parameter for soil-metal structures
C_1	Difference in elevation from roadway surface to top of the upstream end of a culvert on a steep grade
C_2	Difference in elevation from roadway surface to the top of the downstream end of a culvert on a steep grade
d	Depth of channel
d	Depth of flow in gutter
d	Internal diameter of pipe, mm
d	Depth of corrugation, mm
d_c	Critical depth
d_n	Nominal discount rate
d_r	Discount rate
D	Diameter of conduit, inside—or maximum span
D	Depth of corrugation, mm
D	Minimum cover from top surface of flexible pavement to corrugated steel pipe for airplane wheel loads
D	Horizontal diameter or span of a tunnel
D	Long span structure height, mm
D	Delta, tangent angle, corrugation
D	Equivalent diameter = (1/p)x(perimeter of the conduit in metres), m
D_c	Critical pipe diameter, mm
D_h, D_v	Dimensions relating to the conduit as defined in Figure 6.10
DLA	Dynamic load allowance expressed as a fraction of live load
DL	Dead load
E	Railroad live load
E	Modulus of elasticity, MPa
E_m	Modified modulus of soil stiffness, MPa
E_s	Secant modulus of soil stiffness, MPa
EOS	Equivalent Opening Size, geotextiles

Symbol	Definition or Use
f	Friction factor
f	The rate of infiltration at a specific period of time
f_a	Allowable wall stress, MPa
f_b	factored failure stress in compression in the metal conduit wall, MPa
f_c	Compressive stress, MPa
f_c	Minimum rate of infiltration
f_c	Buckling stress, MPa
f_o	Initial rate of infiltration
f_u	Minimum specified tensile strength, MPa
F_m	Reduction factor for modifying buckling stress in multi-conduit structures
F_{sr}	Stress range for fatigue resistance
F_y	Cold-formed yield stress of the metal conduit wall, MPa
FF	Flexibility factor
FS	Factor of safety for buckling
g	Gravitational acceleration
h	Height of fill over pipe
h_o	Tailwater depth (TW)
H	Drop of weir notch, mm
H	Difference in elevation between the most remote point on the basin and the outlet
H	Head, m
H	Height of soil over the top of a tunnel
H	Depth of cover, m
H_c	Depth of cover at intermediate stages of construction, m
H_e	Critical head
H_e	Head, entrance loss
H_e	Increment of head above the critical head, m
H_f	Head, friction loss
H_{min}	Minimum allowable depth of cover above the conduit, m
H_o	Head, exit loss
H_v	Velocity head
HC	Height of cover
HW	Headwater depth
$H20$	Highway live load
i	Intensity, rainfall, mm/hr
i	Transverse slope
i_b	Intensity after peak rainfall
I	General rate of inflation
I	Imperviousness, relative
I	Moment of inertia, mm^4/unit of width
I	Intensity, mm/hr
I	Second moment of cross-sectional area, A, about the neutral axis of corrugated section in the longitudinal direction of the conduit, mm^4/mm
I_a	Intensity before peak rainfall
k	Long span entrance coefficient
k	Rate of decrease in rate of infiltration, f, per unit of time

Symbol	Definition or Use
k_e	Entrance loss coefficient
k_{dg}, k_p	Coefficients based on long span inlet type
k_o	Outlet loss coefficient
k_R	Haunch moment reduction factor for metal box structures
k_{M1},k_{M2},k_{M3}	Factors used in calculating moments in soil-metal structures during construction
k_1,k_2,k_3,k_4	Factors used in calculating dead load and live load moments in soil-metal and metal box structures
K	Soil stiffness factor; load factor
K	Constant equal to l/S_d
K	Conveyance
K	Factor representing the relative stiffness of the conduit wall with respect to the adjacent soil
l	Length of pipe, m
l	Length of opening, m
l_t	Length of dispersed live load at crown level measured transversely, m
L	Length of weir notch, mm
L	Maximum length of travel of water, mm
L	Length of culvert, m
L_c	Line load equivalent to the construction load acting on a metal structure, kN/m
L_1, L_2, L_3	Lengths used for live load pressure distribution calculations for pipe arches, mm
L'	Adjusted value for length
LL	Live load
L_A	Actual slot length
L_L	Line load equivalent to the live load acting on a metal structure, kN/m
L_R	Length of slot with no carryover
m	Long span entrance coefficient
m_f	Modification factor for multi-lane loading
M	Unfactored moment in a soil-metal structure, kN.m/m
M_{cf}	Total factored crown bending moment in a metal box structure, kN.m/m
M_{cD}	Crown bending moment in a metal box structure due to dead load, kN.m/m
M_{hD}	Haunch bending moment in a metal box structure due to dead load, kN.m/m
M_{hf}	Total factored haunch bending moment in a metal box structure, kN.m/m.
M_{hL}	Haunch bending moment in a metal box structure due to live load, kN.m/m
M_B	Additional moment in the wall of a soil-metal structure due to a height of fill, H_c, above the crown, kN.m/m.
M_C	Additional moment in a soil-metal structure due to construction live loads, kN.m/m

Symbol	Definition or Use
M_D	Sum of the intensities of bending moments at the crown and haunch in a metal box structure due to dead load, kN.m/m
M_E	Additional moment in a metal box structure due to earthquake loading, kN.m/m
M_L	Sum of the crown and haunch bending moments in a metal box structure due to live load
M_P	Unfactored plastic moment capacity of a corrugated metal section, kN.m/m
M_{Pf}	Factored plastic moment capacity of a corrugated metal section, kN.m/m
M_l	Moment in a soil-metal structure resulting from fill to the crown level, kN.m/m
n	Number of years
n	Roughness factor
n	Storm frequency
n	Coefficient of roughness
n'	Actual value of Manning's n
N	Circumferential bolt space (= 3 p or 244 mm)
NF	Flexibility number used in calculating moments in a soil-metal structure during construction
P	Pressure, external load
P	Corrugation pitch, (125 x 26 mm corrugation)
P	The external load on tunnel liner
P	Unfactored thrust in the wall of a soil-metal structure, kN/m
pi	p = 3.141592654
pH	Hydrogen ion concentration
P_c	Pressure acting on soil at pipe-arch corners, kN/m^2
P_{cr}	Critical pressure, MPa
P_d	Design pressure, liner plate
P_e	Rainfall excess equal to gross rainfall minus evaporation interception and infiltration
P_{Pf}	Factored compressive strength of a corrugated metal section, without buckling, kN/m
P_t	Accumulated depth of precipitation at time, t
P_{tot}	Total depth of precipitation
P_v	Design pressure, kN/m^2
P_v	Design pressure, ring compression
P_l	The vertical load at the level of the top of the tunnel liner due to dead load
PE	Collapse pressure
PV	Present Value
F	Diameter
F	Index of recharge based on constant rate of infiltration
Q	Discharge, m^3/s (peak, volume rate of flow, or quantity reaching a drain); peak runoff rate
Q_D	Total flow
Q_O	Flow in a gutter, m^3/s

Symbol	Definition or Use
r	Ratio of time before the peak intensity occurs to total time duration
r	Radius of gyration
r	Radius of gyration of corrugation profile, mm
R	Resistivity, electrical
R	Hydraulic radius
R	Ratio of rise to span
R	Radius of conveyor cover
R	Radius of curvature in hook bolt
R	Radius of pipe, mm
R	Radius of curvature of the conduit wall, at the mid-depth of corrugations, at a transverse section, mm; or the rise of a metal box structure, m
R_b	Radius of bottom (plates)
R_c	R at crown, mm
R_c	Radius of corner (plates)
R_e	Equivalent radius, mm
R_s	Radius of side (plates)
R_t	Radius of top (plates)
R_1	Long-span inside radius
R_2	Long-span inside radius
R_B,R_L	Parameters used in calculating moments in the wall of a soil-metal structure during construction
s	Hydraulic gradient of gutter
S	Span of arch or pipe-arch (or maximum horizontal diameter of any shaped structure)
S	Slope (of ground, channel, invert), m/m
S	Slope, equal to H/L where H is the difference in the elevation between the most remote point on the basin and the outlet, m/m
S	Side slope
S	Section modulus, mm^3
S	Least transverse clear spacing between adjacent conduits, m
S_d	Maximum storage capacity of depression
S_o	Slope, bed (at outlet)
SF	Safety factor (or FS)
S_M	Flexural strength of a longitudinal connection, per unit length, kN.m/m
S_S	Axial strength of a longitudinal connection, per unit length, kN/m
t	Time
T, t	Uncoated thickness of sheet or plate, mm
T_c	Time of concentration of flow
T_f	Maximum thrust in the conduit wall due to factored loads per unit length, kN/m
T_C	Additional thrust in the wall of a soil-metal structure due to construction live loads, kN/m
T_E	Additional thrust in the wall of a soil-metal structure due to earthquake loading kN/m

Symbol	Definition or Use
TL	Tangent length
TW	Tailwater depth
T_D, T_L	Maximum thrust in the conduit wall per unit length due to unfactored dead and live loads, respectively, kN/m
T	Thrust per lineal, m
T	Width of water surface, m
t_a	Time after peak
t_b	Time before peak
V	Velocity, mean, m/sec
V	Volume of storage at any particular time
V	Mean velocity of flow, m/sec
V_a, V_1	Approach velocity
V_c	Velocity head
SV	Summation of vertical forces in ring compression calculations
w	Unit weight of soil, kN/m^3
W	Width, conveyor cover
W	Weight of moist soil
W, WP	Wetted perimeter
W	Total weight of soil and live loads over a structure
W	Dead weight of the column of material above the conduit per unit length of conduit kN/m for soil-metal structures.
WS	Water surface
X	Distance from neutral axis to outer fiber
Υ	unit weight of soil, kN/m^3
z	Transverse slope reciprocal
θ	Skew angle of the conduit, degrees
κ	Crown moment coefficient used to calculate the crown and haunch bending moments in a metal box structure
λ	Factor used in calculating K
p	Reduction factor for buckling stress in metal conduit wall
σ	Stress due to thrust in a conduit wall due to factored loads, MPa
σ_L	Equivalent uniformly-distributed pressure at the crown due to unfactored dispersed live load, kPa
ϕ_h	Resistance factor for plastic hinge
ϕ_j	Resistance factor for failure of seams
ϕ_t	Resistance factor for compressive strength of soil-metal and metal box structures
v	Poissson's ratio

INDEX

The scope of this book can best be determined by the Table of Contents located at the begining. The chapters and prime references are shown in bold face. Tables are indicated by a T followed by chapter, table number and page number (T1.1, 41).

A

Acceptance of steel 2
Aerial Conduits 11, 12, 13
Aerial sewers 295, 316
Aerial spans 295
Air lock chambers 15
Anchor bolts 52, 52, 339, 381
Applications, Chapter 1: 1-94
Arch channels 52
Arch sections 437

B

Bedding 25, 249, 298, 310, 312- 314, 320, 323, 325, 335, 337, 341, 344, 360, 435
Bent protection systems 13
Bin walls 46, 303, 339, 348, 411-413, 416, 417, 435
Bituminous coatings 349
Bituminous pavement 317
Bolting 32, 69, 320, 322, 408, 451
Bolts and nuts 37, 51, 55, 64, 317, 394, 407
Box culverts 1-3, 5, 6, 19, T2.34, 59, 336, 343, 453
Bridges 2-5, 13, 17, 171, 360, 376, 382, 385, 387, 389, 410, 439
Bridge replacements 3
Breakaway supports 402
Buried structures 204
  loads on 205
  research and development 205
  structural design of 209

C

Caisson design 398
Calculating ring compression 203, 215
Camber 314, 436
Cantilever 333, 410, 436
Catch basins 78, 79, 82
Channels
  Arch 52
  Hydraulics of 129
  Protection of 135
Coated pipe 295, 317, 352
Coefficients of friction T1.1, 14
Compaction density 249, 326
Compaction equipment 218, 326
Compaction of backfill 325
Compression ring 204, 297, 306, 389
Conduits (see culverts, under-passes,aerial conduits) 18
Construction Procedures, Chapter 7: 309-344
Conversion Tables
Conveyors 12, 13, 387
Conveyor covers 32
Corrugated steel box culverts 2, 5, 59, 94
Cost savings 6, 360
Coupling systems 70-75
Cover, height limits T HC.1 to 12, 250 to 258
Critical density 304
Culverts
  Alignment 193-196
  Applications 12, 13
  Entrance loss 138, T4.5, 140, 143, 145, 150
  Grade 17, 19, 129
  Headwall 46, 51, 83-90
  Inlet control 139, 140, 143, 146, 148, 150

Length 149, 194, 197-199
Levee 455
Location, Chapter 5: 193-202
Outlet control 140, 143, 147, 148
Curved walls 416

D

Dams and levees 9
Dead loads 204, 210, 237, 244
Definitions, hydraulic 139-145
Definition of Terms and Symbols 433-465
Depression storage 105, 111, 114, 122, 125, 126
Design factors 17
Detention Chamber 1
Ditch checks 9, 137, 411
Drainage gates 9
Durability, Chapter 8: 345-353
Abrasion 347
Add-on service life for non-metallic coatings T8.3, 353
Corrosion 346
Estimating average life 350
Investigations 347
Tables 346, 353
Resistivity Values T8.1, 346
Corrosiveness of Soils T8.2, 346

E

Earth Backfill Design 325
End finish 83
End sections 83-89, 194
End treatment 46, 51, 87, 90, 180, 189. 296, 301, 303, 339, 441
Entrance Loss 138, 140, 145, 150
Entrance loss coefficients T4.5, 140
Erosion prevention 9
Estimation of rainfall 96
Examples, design
Structural 259 to 290
Hydraulic 132-137
External Hydrostatic Pressure 294

F

Fabrication **(see Product Details Chapter 2) 17-94**
Fan ducts 15
Field joints 70, 315
Fill Techniques
Fish baffles 9, 10
Fittings 75
Flexible steel conduits 1
Flumes, corrugated steel 9, 135
Formulas: equations
Chezy 130
Collapse pressure 294
Darcy-Weisbach 14
Dead load 210
Energy head 144
Entrance loss 145
Flexibility factor 217
Friction loss 145
Headwater depth 143
Kirpich 116
Manning 130
Ring compression 215
Timoshenko buckling 294
Velocity head 144
Foundation preparation 320, 425
Foundation types 310-312
Friction loss 145
Full flow data 144-147, T4.11 to 4.13, 174, 177, 179

G

Gaskets 69-74
Geotextiles 184
Grade Separations 12
Granular backfill 327, 331, 335, 343
Groundwater 31, 79, 324
Guiderails, Chapter 12: 401-410

H

Head, hydraulic 143
Headwalls, culvert 46, 51, 83-90
Headwater depth 140
Heat manifolds 15
Helically corrugated steel pipe 147
Height of cover tables T HC.1 to 12, 249-258
Hook bolts 51, 180
Horseshoe or full round 224
Hydraulic slope 144
Hydraulics, Chapter 4: 129-192
Computations 148
Culverts 137

Culverts in inlet control 139, 140, 143, 146, 148, 150
Culverts in outlet control 140, 143, 147, 148
Long span 171
Open drainage channels 129
Special considerations 180
Storm water inlets 184
Subdrains 182
Hydrology, Chapter 3: 95-128
Hydrostatic, external pressure 294

I

Imperviousness 461
Infiltration 7, 9, 100, 105, 106, 108, 109, 111, 114, 119, 120, 125, 126, 325, 446
Inlet control 139, 140, 143, 146-148
Hydraulics of 140
Long span 171
Nomographs 151-157
Installation and Construction, Chapter 7: 309-344
Backfill, Compaction and Placement of 325 to 332
Backfill, Long Span Structures 341
Base preparation 309
Bin walls 411
Guiderails, Chapter 12: 410, 410
Long span structures 341
Multiple 336
Shop fabricated pipe & pipe arch 339
Structural plate 317, 319, 323, 334, 335, 40
Tunnel liner plates 388, 390, 393

J

Joints (see couplings & fittings) 70-75

L

Least Cost Analysis 361
Levee culverts 2, 9, 193
Levees and dams 9, 180
Liner Plate, Tunnel, Chapter 11: 387-400
Lining to extend life 340
Loads (pressure and stresses) 210
Airport 213
Breakaway supports T12.1, 402
Column or end 293
Computation 210
Dead 210
Highway T6.8, 211
Hydrostatic 180, 294, 304, 399
Railroad T6.8, 212
Live 210
Location, Culvert - Chapter 5: 193-202
Long span structures 4
High profile T2.23, 47
Horizontal ellipse T2.21, 44
Hydraulics 177
Low profile T2.22, 45
Pear shape T2.24, 48
Structural design ?
Longitudinal seam strength T6.4a-d, 207, 391, 394, 395, T11.1, 397, 400
Low maintenance 1
Luminaire Supports T12.1, 402

M

Maintenance and Rehabilitation, Chapter 10: 371-386
Manholes 3, 74, 80, 377
Materials handling 11-13
Maximum value 233, 247
Median Barriers 401
Metallic coatings 345, 349, 351
Minimum cover T6.9, 213, 233, 336, 337, 359
Moment of inertia 217, 239, 294, 389
Guiderails T12.2 to 12.4, 403
Liner plates T11.2, 397,
Multiple structures 227, 238, 239, 336

N

Need for lining 340
Nestable pipe 33
Nomograph, Manning's formula 133
Nomographs, Inlet control 151-157
Nomographs, Outlet control 158 -165

O

Open drainage channels 129
Outlet control 140, 143, 147, 148
Outlet control Nomographs 158-165

P

Paved invert pipe 317
Pedestrian underpass 49
Perforated pipe 7
  Dimensions and weight T2.12, 31
Pipe foundation 312, 376
Pipe spillways 9, 135
Polymer coatings T2.40, 69, 352
Power plant cooling water lines 11
Pressure design 214
Product Details and Fabrication, Chapter 2: 17-94
Progress through research 1

R

Radius of gyration 21, 36, 64, T6.2, 206, T6.3, 207, 215, 238, 389, 392
Rainfall hyetograph 98, 99, 11, 114, 119
Rainfall intensity 96-98, 103, 106, 114, 119, 124
Rainfall-runoff relationships 95, 98, 120
Rational method 106
Replacement of bridges 3
Research
  Durability 344
  Strength 1, 302
  Values of *n* for helically corrugated pipe T4.6, 145
Resistivity 345, 347, 348, 351, 371
Retaining Walls 8, 9, 83, 90, 333, 348, 387, **Chapter 13: 411-428**
Ring compression calculating 215
Riprap 9, 83, 90, 194, 298, 301, 339, 360
Riveted corrugated steel pipe 293
Rock foundations 312
Roughness coefficient 119, 126, 135, 147, 149
Runoff
  Coefficient 106
  Estimation of 105
  Estimation methods 119
  Subsurface computation 182

S

Saddle branch 78
Safe velocities 135
Seam strength 206, T6.4a-d, 207, 213, 218,
Sectional properties of corrugated steel pipes 21
  Liner plates T11.1-11.2, 397
  Various sizes and configurations T2.18 to 2.26, 41 to 50
  W-Beam guiderail T12.2, 403
Service Tunnels 13
Sheet flow drainage 11
Sheeting 9, 83
Sheeting, Light Weight, Chapter 14: 429-432
Sizes and shapes of corrugated steel 1, 21, T2.7-2.11, 21-26
  Pipe arches T2.19-2.20, 42-43, T2.22-2.23, 45-46
Skews and bevels 83, 90
Slotted steel pipe drains 11, 34, 35, 185, 187-191
Soft foundations 310
Soil steel 343
Special hydraulic considerations 180
  Corrugated steel pipe 68-69
  Perforated corrugated pipe 31
  Tunnel Liner Plates 387-400
Spillways 1, 9, 83, 135
Spot welded seams 301
Standard Band Connectors 73
Steel Box Culverts 2, 3, 5, 59
Steel Wire Gabions, Chapter 13: 421-428
Storm drainage 2, 6, 8, 102, 184
Storm sewers 2, 3, 6, 129, 345, 347, 348, 377, 378
Stream enclosures 3, 5, 9
Structural Design, Chapter 6: 203-308
Structural plate pipe, pipe arches, arches 36
  Bolting procedures 320
  Design data T2.27-2.29, 51-55

Details of uncurved sections 37
Field assembled 75
Long span 226
Shapes 18, 36, 53, 64, 230
Underpass sizes T2.1, 19, T2.45, 49
Weight T2.16, 37
Structural strength 1
Subaqueous pipe 11
Subdrainage 8
Symbols 459-465

T

Thickness
Corrugated steel pipe T6.2, 206
Structural plate T6.2, 206
Time of concentration, runoff 114
Time saving 1
Trapezoidal channel 132-134
Triangular channel flow nomograph 186
Tunnel Liner Plates, Chapter 11: 387-400
Tunnels 1, 5, 11-13, T2.1, 19, 340, 387, 391, 394, 398

U

Underpasses T2.1, 19, T2.45, 49
Utility applications 11
Utility conduits 11

V

Value engineering 357
Value Engineering and Least Cost Analysis; Chapter 9: 357-370
Velocity of water 135
Vehicular Underpass 12
Ventilation ducts 14

W

Wall stress, allowable 215
Weight
Corrugated steel pipe T2.7to 2.9, 26 to 28
Structural plate sections T2.16, 37